SITE CONSTRUCTION PLANS

FOR

BROOKHAVEN PHASE 4

A 193 LOT RESIDENTIAL SUBDIVISION

ESCAMBIA COUNTY, FLORIDA

RBA PROJECT NO.: 2015.035(F)

SITE INFORMATION	
OWNER:	DEVINE FARMS, LLC PO BOX 12603 PENSACOLA, FL 32591-2603 850-777-6630
DEVELOPER:	DEVINE FARMS, LLC PO BOX 12603 PENSACOLA, FL 32591-2603 850-777-6630
PROPERTY REFERENCE NO:	35-1N-31-4101-000-002, 35-1N-31-2101-000-000, 35-1N-31-4101-000-000, 35-1N-31-4101-000-005
PROPERTY ADDRESS:	MARGARET OLIVIA DRIVE
PROPERTY AREA:	87.31 ACRES
PROJECT AREA:	64.23 ACRES (UPLANDS)
PROPERTY ZONING:	MDR & LDR
FUTURE LAND USE:	MU-S
PROPOSED ACTIVITY:	SUBDIVISION
REQUIRED BUILDING SETBACKS MDR:	FRONT YARD - 20 FT. SIDE YARD - 10% OF LOT WIDTH, 5' MIN-15' MAX REAR YARD - 20 FT.
REQUIRED BUILDING SETBACKS LDR:	FRONT YARD - 25 FT. SIDE YARD - 10% OF LOT WIDTH, 5' MIN-15' MAX REAR YARD - 25 FT.

FEMA FLOOD INSURANCE RATE MAP INFORMATION					
THE PARCEL SHOWN FOR DEVELOPMENT IS LOCATED WITHIN THE FOLLOWING FLOOD ZONE(S) AS DETAILED BY FEMA FIRM (FLOOD INSURANCE RATE MAP) INFORMATION DESCRIBED BELOW:					
FLOOD ZONE(S)	COMMUNITY No.	MAP No.	PANEL No.	SUFFIX	MAP REVISION DATE
X	120080	12033C	290	G	SEPT 29, 2006

A 100-YR STORM EVENT BASE FLOOD STUDY WAS PERFORMED FOR BROOKHAVEN PHASE 4, BFE=75.00' WITH FINISHED FLOORS SET A MINIMUM OF 3-FT ABOVE THE CALCULATED BFE.

CONTACTS	
REBOL-BATTLE & ASSOCIATES CIVIL ENGINEERS AND SURVEYORS 2301 N. NINTH AVENUE SUITE 300 PENSACOLA, FLORIDA 32503	CONTACT: PAUL A. BATTLE, P.E. CONTACT: MARK A. NORRIS, P.S.M. PHONE: 850.438.0400 FAX: 850.438.0448
GULF POWER 500 BAYFRONT PARKWAY PENSACOLA, FLORIDA 32520	CONTACT: DON SCHOFIELD PHONE: 850.444.6555 FAX: 850.444.6432
COX CABLE 2205 LaVISTA AVE. PENSACOLA, FLORIDA 32504	CONTACT: RICHARD EMMONS PHONE: 850.477.2695 FAX: 850.479.3912
ECUA P.O. BOX 15311 PENSACOLA, FLORIDA 32514	CONTACT: BRANDON KNIGHT PHONE: 850.969.3312
ENERGY SERVICES GAS 1625 ATWOOD DRIVE PENSACOLA, FLORIDA 32504	CONTACT: JOHN DeMARS PHONE: 850.474.5322 FAX: 850.474.5330
AT&T, INC. 605 W. GARDEN STREET PENSACOLA, FLORIDA 32501	CONTACT: JONATHAN BLANKINCHIP PHONE: 850.436.1489
ESCAMBIA COUNTY ENGINEER 1190 W. LEONARD STREET PENSACOLA, FLORIDA 32501	CONTACT: JOY BLACKMON PHONE: 850.595.3434
FARM HILL UTILITY, INC 120 MADRID RD CANTONMENT, FL 32533	CONTACT: SHAUN CONDON PHONE: 850.968.2573
GULF SOUTH PIPELINE 480 VAN PELT LANE PENSACOLA, FL 32505	CONTACT: CHUCK CHAPMAN PHONE: 850.324.6337
MCI	PHONE: 800.624.9675
SUNSHINE UTILITIES	PHONE: 800.432.4770

June 1, 2022

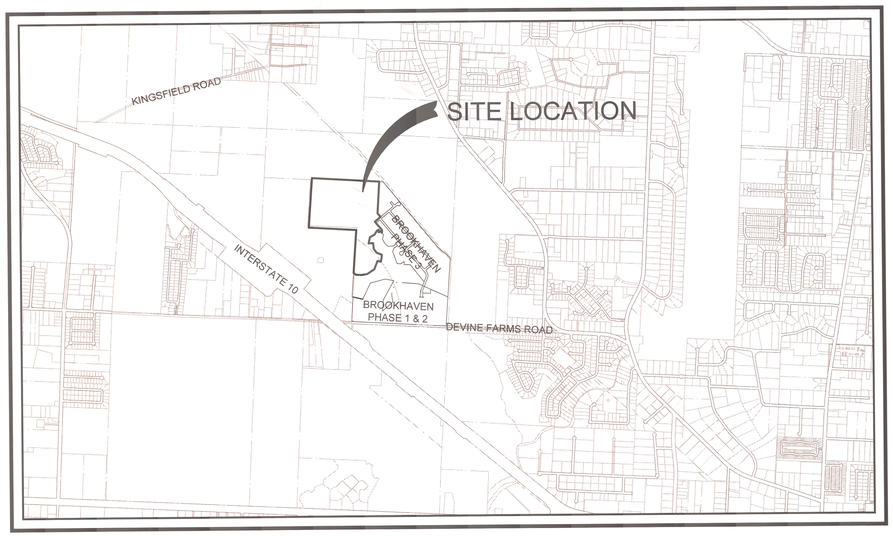

VICINITY MAP

SCALE: 1" = 2000'

Approved J. Hampton 6-22-22
Designee Date

This document has been reviewed in accordance with requirements of applicable Escambia County Regulations and Ordinances and does not in any way relieve the submitting Architect, Engineer, Surveyor, or other signatory from responsibility of details as drawn.

DRAINAGE FEE

Imperv. Surf. 217135.0 Sq ft

Stormwater Ret. 0.65 % (F)

Total Drainage Fee $ 7,056.89

Pond Maint. Fee: MSBU

RBA

REBOL-BATTLE & ASSOCIATES

Civil Engineers and Surveyors

2301 N. Ninth Avenue, Suite 300
Pensacola, Florida 32503
Telephone 850.438.0400
Fax 850.438.0448
EB 00009657 LB7916

PAUL A. BATTLE LICENSE 4/19/22 STATE OF FLORIDA PROFESSIONAL ENGINEER

INDEX OF DRAWINGS

C1.0	EXISTING SITE, DEMOLITION AND EROSION CONTROL PLAN
C1.1	GEOTECHNICAL BORING LOCATION PLAN
C1.2	EROSION CONTROL DETAILS
C1.3	NPDES-STORMWATER POLLUTION PREVENTION PLAN
C2.0~C2.6	SITE LAYOUT AND DIMENSION PLAN
C2.7	SITE DETAILS
C3.0~C3.5	GRADING AND DRAINAGE PLAN
C3.6~C3.11	GRADING AND DRAINAGE DETAILS
C3.12~C3.17	NEIGHBORHOOD GRADING AND DRAINAGE PLAN
C4.0~C4.5	UTILITY PLAN
C4.6	UTILITY DETAILS
C5.0~C5.12	PLAN & PROFILE
C6.0~C6.13	PLAN & PROFILE
C7.0~C7.12	CROSS SECTIONS

DESCRIPTION: AS PREPARED BY REBOL-BATTLE AND ASSOCIATES
BEGINNING AT THE NORTHEAST CORNER OF BROOKHAVEN PHASE 2, AS RECORDED IN PLAT BOOK 20 AT PAGES 2 AND 2A OF THE PUBLIC RECORDS OF ESCAMBIA COUNTY, FLORIDA; THENCE PROCEED SOUTH 75°20'07" WEST ALONG THE NORTH LINE OF BROOKHAVEN PHASE 2 FOR A DISTANCE OF 268.35 FEET; THENCE PROCEED SOUTH 25°14'17" WEST ALONG SAID NORTH LINE FOR A DISTANCE OF 492.23 FEET TO THE NORTH LINE OF BROOKHAVEN PHASE 1, AS RECORDED IN PLAT BOOK 19 AT PAGES 81, 81A AND 81B OF THE PUBLIC RECORDS OF ESCAMBIA COUNTY, FLORIDA; THENCE DEPARTING AFOREMENTIONED BROOKHAVEN PHASE 2 PROCEED NORTH 77°07'45" WEST ALONG THE NORTH LINE OF BROOKHAVEN PHASE 1 FOR A DISTANCE OF 278.25 FEET; THENCE DEPARTING SAID NORTH LINE OF BROOKHAVEN PHASE 1 PROCEED NORTH 03°26'36" EAST FOR A DISTANCE OF 623.86 FEET; THENCE PROCEED NORTH 85°52'40" WEST FOR A DISTANCE OF 17.04 FEET TO THE WEST LINE OF THE EAST ½ OF SECTION 35; THENCE PROCEED NORTH 04°07'20" EAST ALONG SAID WEST LINE FOR A DISTANCE OF 1235.95 FEET; THENCE DEPARTING SAID WEST LINE PROCEED NORTH 86°36'52" WEST FOR A DISTANCE OF 1327.09 FEET TO THE WEST LINE OF THE EAST HALF OF THE WEST HALF OF SECTION 35; THENCE PROCEED NORTH 04°09'14" EAST ALONG SAID WEST LINE FOR A DISTANCE OF 1377.05 FEET TO THE NORTHWEST CORNER OF THE SOUTHEAST ¼ OF THE NORTHWEST ¼ OF SECTION 35; THENCE DEPARTING SAID WEST LINE PROCEED SOUTH 86°33'13" EAST ALONG THE NORTH LINE OF THE SOUTH ½ OF THE NORTH ½ OF SECTION 35 FOR A DISTANCE OF 1872.39 FEET; THENCE DEPARTING SAID NORTH LINE PROCEED SOUTH 03°23'31" WEST FOR A DISTANCE OF 879.13 FEET; THENCE PROCEED SOUTH 39°44'26" EAST FOR A DISTANCE OF 132.0 FEET; THENCE PROCEED SOUTH 50°15'34" WEST FOR A DISTANCE OF 208.72 FEET; THENCE PROCEED SOUTH 39°44'26" EAST FOR A DISTANCE OF 310.00 FEET; THENCE PROCEED SOUTH 03°23'31" WEST FOR A DISTANCE OF 1396.32 FEET TO THE POINT OF BEGINNING
LYING IN AND BEING A PORTION OF SECTION 35, TOWNSHIP 1 NORTH, RANGE 31 WEST, ESCAMBIA COUNTY, FLORIDA.

SITE ENVIRONMENTAL INFORMATION	
OVERALL SITE AREA	87.31 ACRES
ACOE/NWFWMD/ESCAMBIA COUNTY JURISDICTIONAL WETLANDS	23.08 ACRES
WETLAND BUFFER	3.47 ACRES
WETLAND BUFFER IMPACT	0.07 ACRES
PROPOSED ADDITIONAL WETLAND BUFFER	0.07 ACRES
AVERAGE WETLAND BUFFER WIDTH	25'
WETLAND IMPACT	0 ACRES

THE CONTRACTOR IS RESPONSIBLE FOR OBTAINING "RELEASED FOR CONSTRUCTION" DRAWINGS FROM REBOL-BATTLE & ASSOCIATES BEFORE BEGINNING CONSTRUCTION. REBOL-BATTLE & ASSOCIATES WILL NOT BE RESPONSIBLE FOR ANY CONSTRUCTION BASED ON PLANS THAT HAVE NOT BEEN RELEASED FOR CONSTRUCTION.

ECUA ENGINEERING MANUAL REFERENCE NOTE*

*NOTES SHALL BE INSERTED IN THE UPPER RIGHT CORNER OF TITLE SHEET

*APPLICABLE ONLY TO ECUA INFRASTRUCTURE TO BE CONSTRUCTED IN PUBLIC ROW OR IN UTILITY EASEMENT; NOT TO BE APPLIED TO PRIVATE WATER/SEWER FACILITIES ON PRIVATE PROPERTY (SEE BUILDING CODE)

A. ECUA ENGINEERING MANUAL INCORPORATED BY REFERENCE

THE ECUA ENGINEERING MANUAL, DATED DECEMBER 18, 2014, ALONG WITH UPDATE # 1 DATED SEPTEMBER 1, 2016 (HEREINAFTER "MANUAL"), LOCATED AT WWW.ECUA.FL.GOV, IS HEREBY INCORPORATED BY REFERENCE INTO THIS PROJECT'S OFFICIAL CONTRACT DOCUMENTS AS IF FULLY SET FORTH THEREIN. IT IS THE CONTRACTOR'S RESPONSIBILITY TO BE KNOWLEDGEABLE OF THE MANUAL'S CONTENTS AND TO CONSTRUCT THE PROJECT IN ACCORDANCE WITH THE MANUAL. THE CONTRACTOR SHALL PROVIDE ITS EMPLOYEES ACCESS TO THE MANUAL AT ALL TIMES, VIA PROJECT SITE OR OFFICE, VIA DIGITAL OR PAPER FORMAT. IN THE EVENT OF A CONFLICT BETWEEN THE MANUAL AND PLANS, CONTRACTOR SHALL CONSULT ENGINEER OF RECORD FOR PROPER RESOLUTION.

B. ADDITIONAL DOCUMENTS (TO BE COMPLETED BY THE ENGINEER OF RECORD)

DOES THIS PROJECT HAVE ADDITIONAL TECHNICAL SPECIFICATIONS OR CONSTRUCTION DETAILS THAT SUPERSEDE THE MANUAL LISTED ABOVE?

■YES ☐NO

IF YES, CONTRACTOR SHALL CONSTRUCT PROJECT IN ACCORDANCE WITH SAID DOCUMENTS AS LISTED AND LOCATED BELOW:

DOCUMENT NAME	DOCUMENT TYPE		LOCATION	
	SPECIFICATION	DETAIL	PLANS	PROJECT MANUAL*
LOW PRESSURE		X	X	

*PROJECT MANUALS USED ONLY WITH ECUA CIP PROJECTS

C. ENGINEER OF RECORD RESPONSIBILITIES

THE ENGINEERS OF RECORD (EORS) THAT HAVE AFFIXED THEIR SEALS AND SIGNATURES ON THESE PLANS WARRANT THEIR PORTIONS OF THE PLANS HAVE BEEN DESIGNED IN ACCORDANCE WITH THE MANUAL (UNLESS OTHERWISE DIRECTED BY THE ECUA PROJECT ENGINEER). THE EORS SHALL BE KNOWLEDGEABLE OF THE MANUAL'S CONTENTS AND SHALL ASSUME RESPONSIBILITY FOR ITS USE ON THIS PROJECT.

P:\2015\2015035 (F) - BROOKHAVEN PHASE 3\DRAWINGS\01 COVER.dwg

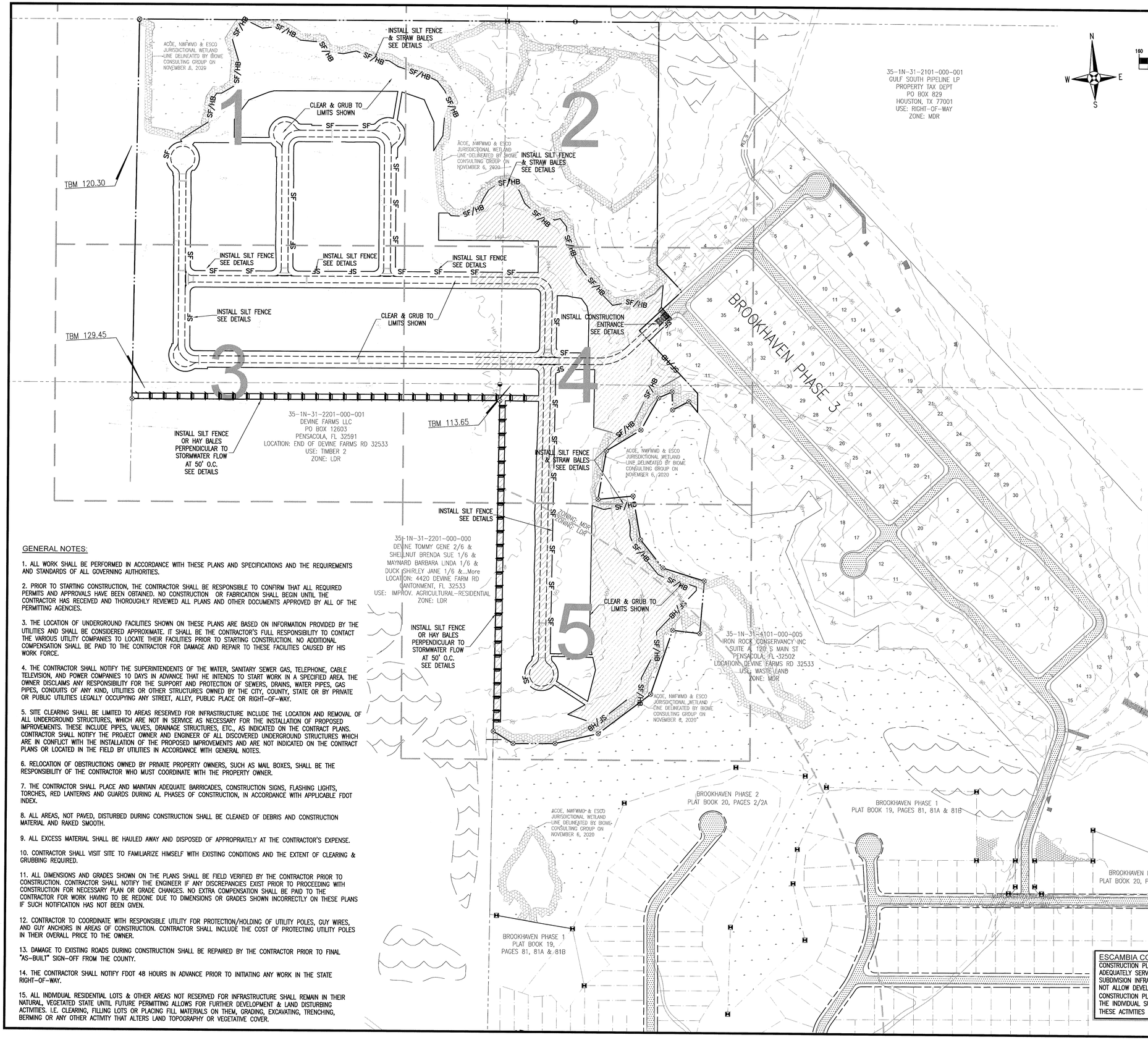

GENERAL NOTES:

1. ALL WORK SHALL BE PERFORMED IN ACCORDANCE WITH THESE PLANS AND SPECIFICATIONS AND THE REQUIREMENTS AND STANDARDS OF ALL GOVERNING AUTHORITIES.

2. PRIOR TO STARTING CONSTRUCTION, THE CONTRACTOR SHALL BE RESPONSIBLE TO CONFIRM THAT ALL REQUIRED PERMITS AND APPROVALS HAVE BEEN OBTAINED. NO CONSTRUCTION OR FABRICATION SHALL BEGIN UNTIL THE CONTRACTOR HAS RECEIVED AND THOROUGHLY REVIEWED ALL PLANS AND OTHER DOCUMENTS APPROVED BY ALL OF THE PERMITTING AGENCIES.

3. THE LOCATION OF UNDERGROUND FACILITIES SHOWN ON THESE PLANS ARE BASED ON INFORMATION PROVIDED BY THE UTILITIES AND SHALL BE CONSIDERED APPROXIMATE. IT SHALL BE THE CONTRACTOR'S FULL RESPONSIBILITY TO CONTACT THE VARIOUS UTILITY COMPANIES TO LOCATE THEIR FACILITIES PRIOR TO STARTING CONSTRUCTION. NO ADDITIONAL COMPENSATION SHALL BE PAID TO THE CONTRACTOR FOR DAMAGE AND REPAIR TO THESE FACILITIES CAUSED BY HIS WORK FORCE.

4. THE CONTRACTOR SHALL NOTIFY THE SUPERINTENDENTS OF THE WATER, SANITARY SEWER GAS, TELEPHONE, CABLE TELEVISION, AND POWER COMPANIES 10 DAYS IN ADVANCE THAT HE INTENDS TO START WORK IN A SPECIFIED AREA. THE OWNER DISCLAIMS ANY RESPONSIBILITY FOR THE SUPPORT AND PROTECTION OF SEWERS, DRAINS, WATER PIPES, GAS PIPES, CONDUITS OF ANY KIND, UTILITIES OR OTHER STRUCTURES OWNED BY THE CITY, COUNTY, STATE OR BY PRIVATE OR PUBLIC UTILITIES LEGALLY OCCUPYING ANY STREET, ALLEY, PUBLIC PLACE OR RIGHT-OF-WAY.

5. SITE CLEARING SHALL BE LIMITED TO AREAS RESERVED FOR INFRASTRUCTURE INCLUDE THE LOCATION AND REMOVAL OF ALL UNDERGROUND STRUCTURES, WHICH ARE NOT IN SERVICE AS NECESSARY FOR THE INSTALLATION OF PROPOSED IMPROVEMENTS. THESE INCLUDE PIPES, VALVES, DRAINAGE STRUCTURES, ETC., AS INDICATED ON THE CONTRACT PLANS. CONTRACTOR SHALL NOTIFY THE PROJECT OWNER AND ENGINEER OF ALL DISCOVERED UNDERGROUND STRUCTURES WHICH ARE IN CONFLICT WITH THE INSTALLATION OF THE PROPOSED IMPROVEMENTS AND ARE NOT INDICATED ON THE CONTRACT PLANS OR LOCATED IN THE FIELD BY UTILITIES IN ACCORDANCE WITH GENERAL NOTES.

6. RELOCATION OF OBSTRUCTIONS OWNED BY PRIVATE PROPERTY OWNERS, SUCH AS MAIL BOXES, SHALL BE THE RESPONSIBILITY OF THE CONTRACTOR WHO MUST COORDINATE WITH THE PROPERTY OWNER.

7. THE CONTRACTOR SHALL PLACE AND MAINTAIN ADEQUATE BARRICADES, CONSTRUCTION SIGNS, FLASHING LIGHTS, TORCHES, RED LANTERNS AND GUARDS DURING AL PHASES OF CONSTRUCTION, IN ACCORDANCE WITH APPLICABLE FDOT INDEX.

8. ALL AREAS, NOT PAVED, DISTURBED DURING CONSTRUCTION SHALL BE CLEANED OF DEBRIS AND CONSTRUCTION MATERIAL AND RAKED SMOOTH.

9. ALL EXCESS MATERIAL SHALL BE HAULED AWAY AND DISPOSED OF APPROPRIATELY AT THE CONTRACTOR'S EXPENSE.

10. CONTRACTOR SHALL VISIT SITE TO FAMILIARIZE HIMSELF WITH EXISTING CONDITIONS AND THE EXTENT OF CLEARING & GRUBBING REQUIRED.

11. ALL DIMENSIONS AND GRADES SHOWN ON THE PLANS SHALL BE FIELD VERIFIED BY THE CONTRACTOR PRIOR TO CONSTRUCTION. CONTRACTOR SHALL NOTIFY THE ENGINEER IF ANY DISCREPANCIES EXIST PRIOR TO PROCEEDING WITH CONSTRUCTION FOR NECESSARY PLAN OR GRADE CHANGES. NO EXTRA COMPENSATION SHALL BE PAID TO THE CONTRACTOR FOR WORK HAVING TO BE REDONE DUE TO DIMENSIONS OR GRADES SHOWN INCORRECTLY ON THESE PLANS IF SUCH NOTIFICATION HAS NOT BEEN GIVEN.

12. CONTRACTOR TO COORDINATE WITH RESPONSIBLE UTILITY FOR PROTECTION/HOLDING OF UTILITY POLES, GUY WIRES, AND GUY ANCHORS IN AREAS OF CONSTRUCTION. CONTRACTOR SHALL INCLUDE THE COST OF PROTECTING UTILITY POLES IN THEIR OVERALL PRICE TO THE OWNER.

13. DAMAGE TO EXISTING ROADS DURING CONSTRUCTION SHALL BE REPAIRED BY THE CONTRACTOR PRIOR TO FINAL "AS-BUILT" SIGN-OFF FROM THE COUNTY.

14. THE CONTRACTOR SHALL NOTIFY FDOT 48 HOURS IN ADVANCE PRIOR TO INITIATING ANY WORK IN THE STATE RIGHT-OF-WAY.

15. ALL INDIVIDUAL RESIDENTIAL LOTS & OTHER AREAS NOT RESERVED FOR INFRASTRUCTURE SHALL REMAIN IN THEIR NATURAL, VEGETATED STATE UNTIL FUTURE PERMITTING ALLOWS FOR FURTHER DEVELOPMENT & LAND DISTURBING ACTIVITIES. I.E. CLEARING, FILLING LOTS OR PLACING FILL MATERIALS ON THEM, GRADING, EXCAVATING, TRENCHING, BERMING OR ANY OTHER ACTIVITY THAT ALTERS LAND TOPOGRAPHY OR VEGETATIVE COVER.

LEGEND

- EXISTING ASPHALT
- EXISTING CONCRETE
- JURISDICTIONAL WETLAND
- 25' WETLAND BUFFER
- EXISTING SURFACE WATERS
- DEMOLITION
- DEMOLITION LINE
- JURISDICTIONAL WETLAND LINE
- BOUNDARY LINE
- LOT LINE
- RIGHT-OF-WAY LINE
- W — WATER LINE
- FORCE MAIN
- OHU — OVERHEAD UTILITIES
- FOC — BURIED FIBER OPTIC CABLE
- -100- — EXISTING CONTOUR
- SF/HB — STRAW BALE
- SF — SILT FENCE
- UTILITY POLE
- LIGHT POLE
- GUY ANCHOR
- TRAFFIC SIGNAL BOX
- MAILBOX
- FIBER OPTIC VAULT
- FIBER OPTIC CABLE MARKER
- SIGN
- BENCHMARK
- FIRE HYDRANT
- FLUSH HYDRANT
- WATER METER
- WATER VALVE
- SEWER MANHOLE
- STORMWATER MANHOLE

VEGETATIVE NATURAL BUFFER NOTE:

ALL VEGETATIVE NATURAL BUFFERS SHALL REMAIN IN NATURAL VEGETATIVE STATE THROUGHOUT THE PROPERTY. THE VNB'S ARE USED TO TREAT THE REAR LOTS FOR STORM WATER TREATMENT.

THE SUBJECT PROPERTY AS SHOWN HEREON IS LOCATED IN FLOOD ZONE X, (MINIMAL RISK AREAS OUTSIDE THE 1-PERCENT AND .2-PERCENT-ANNUAL-CHANCE FLOODPLAINS. NO BFES OR BASE FLOOD DEPTHS ARE SHOWN WITHIN THESE ZONES), AS DETERMINED FROM THE FEDERAL EMERGENCY MANAGEMENT AGENCY FLOOD INSURANCE RATE MAP OF ESCAMBIA COUNTY, FLORIDA, COMMUNITY 120080, FIRM MAP PANEL NUMBERS 12033C0290G, MAP REVISION DATED SEPTEMBER 29, 2006, PRELIMINARY FIRM PANEL 12033C00330J & 12033C00340J.

ESCAMBIA COUNTY SPECIAL NOTE:

CONSTRUCTION PLAN APPROVAL IS REQUIRED TO DOCUMENT THE DESIGN OF INFRASTRUCTURE TO ADEQUATELY SERVE THE CREATED LOTS. THE APPROVAL ALLOWS THE CONSTRUCTION OF THE SUBDIVISION INFRASTRUCTURE AREAS ONLY, AS SPECIFICALLY DESIGNATED, TO PROCEED BUT IT DOES NOT ALLOW DEVELOPMENT ON THE INDIVIDUAL SUBDIVISION LOTS. NEITHER PRELIMINARY PLAT OR CONSTRUCTION PLAN ALLOW LAND CLEARING/ LAND DISTURBANCE ACTIVITIES AND DEVELOPMENT ON THE INDIVIDUAL SUBDIVISION LOTS AS BUILDING PERMITS FOR THE DWELLINGS WILL BE REQUIRED FOR THESE ACTIVITIES PRIOR, ON EACH LOT/PARCEL IN THE FUTURE.

RBA
REBOL-BATTLE & ASSOCIATES
Civil Engineers and Surveyors
2301 N. Ninth Avenue, Suite 300
Pensacola, Florida 32503
Telephone: 850.438.0041 Fax: 850.438.0448
EB 00009657 LB7916

EXISTING SITE, DEMOLITION & EROSION CONTROL PLAN

BROOKHAVEN PHASE 4

A 193 LOT SUBDIVISION
PENSACOLA, FLORIDA

No.	DATE	REVISION

SEAL
NOT FOR CONSTRUCTION
PAUL C. BATTLE
No. 53126
6/15/22
STATE OF FLORIDA
PAUL A. BATTLE, P.E.
No. 53126

Dr. By:
Ck By: PAB
Job No.: 2015.035 F
Date: 6/1/2022

DRAWING No.

C1.0
SHEET 1

This drawing is the property of Rebol-Battle & Associates, and may not be reproduced without written permission.

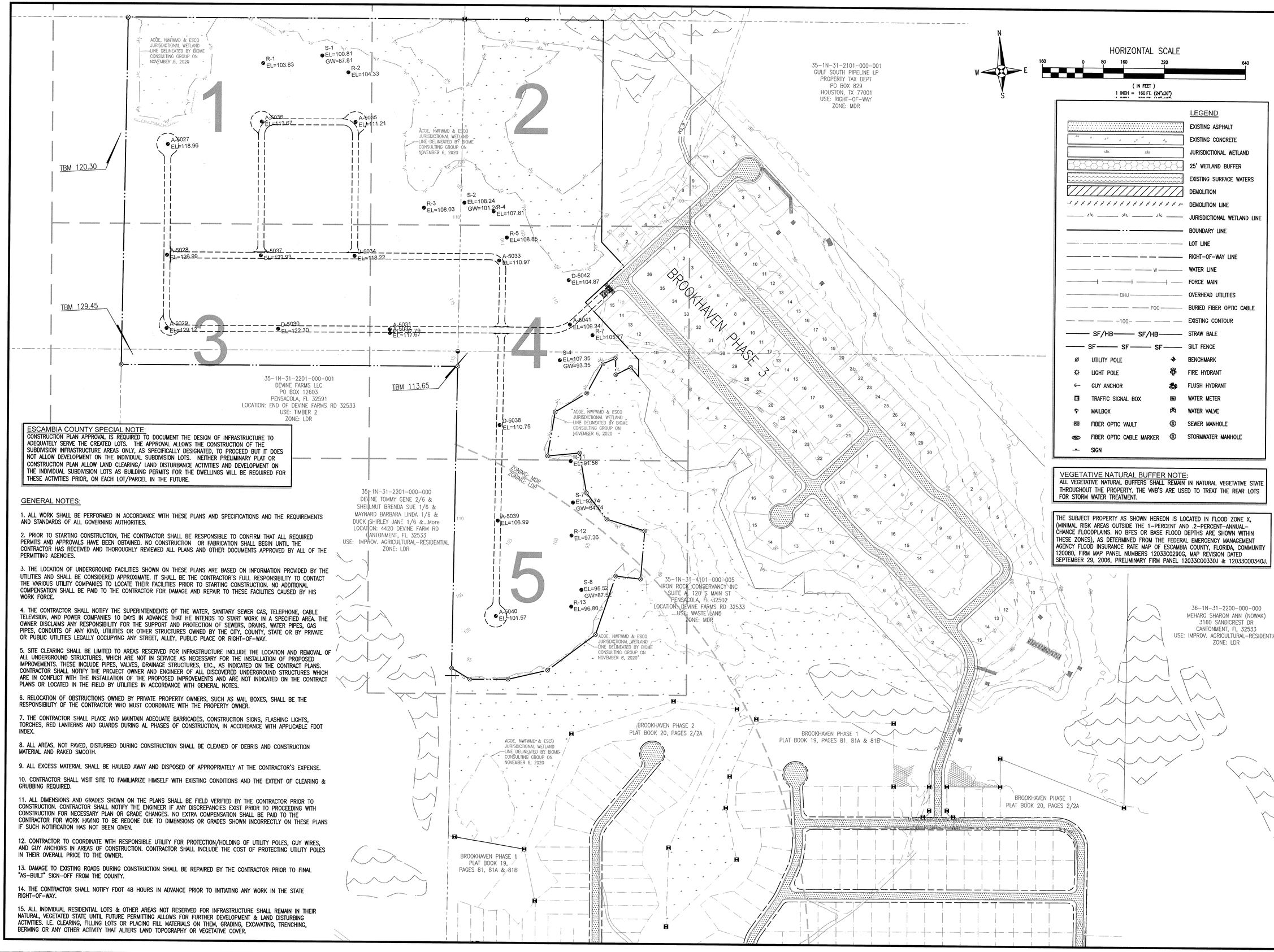

ESCAMBIA COUNTY SPECIAL NOTE:

CONSTRUCTION PLAN APPROVAL IS REQUIRED TO DOCUMENT THE DESIGN OF INFRASTRUCTURE TO ADEQUATELY SERVE THE CREATED LOTS. THE APPROVAL ALLOWS THE CONSTRUCTION OF THE SUBDIVISION INFRASTRUCTURE AREAS ONLY, AS SPECIFICALLY DESIGNATED, TO PROCEED BUT IT DOES NOT ALLOW DEVELOPMENT ON THE INDIVIDUAL SUBDIVISION LOTS. NEITHER PRELIMINARY PLAT OR CONSTRUCTION PLAN ALLOW LAND CLEARING/ LAND DISTURBANCE ACTIVITIES AND DEVELOPMENT ON THE INDIVIDUAL SUBDIVISION LOTS AS BUILDING PERMITS FOR THE DWELLINGS WILL BE REQUIRED FOR THESE ACTIVITIES PRIOR, ON EACH LOT/PARCEL IN THE FUTURE.

GENERAL NOTES:

1. ALL WORK SHALL BE PERFORMED IN ACCORDANCE WITH THESE PLANS AND SPECIFICATIONS AND THE REQUIREMENTS AND STANDARDS OF ALL GOVERNING AUTHORITIES.

2. PRIOR TO STARTING CONSTRUCTION, THE CONTRACTOR SHALL BE RESPONSIBLE TO CONFIRM THAT ALL REQUIRED PERMITS AND APPROVALS HAVE BEEN OBTAINED. NO CONSTRUCTION OR FABRICATION SHALL BEGIN UNTIL THE CONTRACTOR HAS RECEIVED AND THOROUGHLY REVIEWED ALL PLANS AND OTHER DOCUMENTS APPROVED BY ALL OF THE PERMITTING AGENCIES.

3. THE LOCATION OF UNDERGROUND FACILITIES SHOWN ON THESE PLANS ARE BASED ON INFORMATION PROVIDED BY THE UTILITIES AND SHALL BE CONSIDERED APPROXIMATE. IT SHALL BE THE CONTRACTOR'S FULL RESPONSIBILITY TO CONTACT THE VARIOUS UTILITY COMPANIES TO LOCATE THEIR FACILITIES PRIOR TO STARTING CONSTRUCTION. NO ADDITIONAL COMPENSATION SHALL BE PAID TO THE CONTRACTOR FOR DAMAGE AND REPAIR TO THESE FACILITIES CAUSED BY HIS WORK FORCE.

4. THE CONTRACTOR SHALL NOTIFY THE SUPERINTENDENTS OF THE WATER, SANITARY SEWER GAS, TELEPHONE, CABLE TELEVISION, AND POWER COMPANIES 10 DAYS IN ADVANCE THAT HE INTENDS TO START WORK IN A SPECIFIED AREA. THE OWNER DISCLAIMS ANY RESPONSIBILITY FOR THE SUPPORT AND PROTECTION OF SEWERS, DRAINS, WATER PIPES, GAS PIPES, CONDUITS OF ANY KIND, UTILITIES OR OTHER STRUCTURES OWNED BY THE CITY, COUNTY, STATE OR BY PRIVATE OR PUBLIC UTILITIES LEGALLY OCCUPYING ANY STREET, ALLEY, PUBLIC PLACE OR RIGHT-OF-WAY.

5. SITE CLEARING SHALL BE LIMITED TO AREAS RESERVED FOR INFRASTRUCTURE INCLUDE THE LOCATION AND REMOVAL OF ALL UNDERGROUND STRUCTURES, WHICH ARE NOT IN SERVICE AS NECESSARY FOR THE INSTALLATION OF PROPOSED IMPROVEMENTS. THESE INCLUDE PIPES, VALVES, DRAINAGE STRUCTURES, ETC., AS INDICATED ON THE CONTRACT PLANS. CONTRACTOR SHALL NOTIFY THE PROJECT OWNER AND ENGINEER OF ALL DISCOVERED UNDERGROUND STRUCTURES WHICH ARE IN CONFLICT WITH THE INSTALLATION OF THE PROPOSED IMPROVEMENTS AND ARE NOT INDICATED ON THE CONTRACT PLANS OR LOCATED IN THE FIELD BY UTILITIES IN ACCORDANCE WITH GENERAL NOTES.

6. RELOCATION OF OBSTRUCTIONS OWNED BY PRIVATE PROPERTY OWNERS, SUCH AS MAIL BOXES, SHALL BE THE RESPONSIBILITY OF THE CONTRACTOR WHO MUST COORDINATE WITH THE PROPERTY OWNER.

7. THE CONTRACTOR SHALL PLACE AND MAINTAIN ADEQUATE BARRICADES, CONSTRUCTION SIGNS, FLASHING LIGHTS, TORCHES, RED LANTERNS AND GUARDS DURING AL PHASES OF CONSTRUCTION, IN ACCORDANCE WITH APPLICABLE FDOT INDEX.

8. ALL AREAS, NOT PAVED, DISTURBED DURING CONSTRUCTION SHALL BE CLEANED OF DEBRIS AND CONSTRUCTION MATERIAL AND RAKED SMOOTH.

9. ALL EXCESS MATERIAL SHALL BE HAULED AWAY AND DISPOSED OF APPROPRIATELY AT THE CONTRACTOR'S EXPENSE.

10. CONTRACTOR SHALL VISIT SITE TO FAMILIARIZE HIMSELF WITH EXISTING CONDITIONS AND THE EXTENT OF CLEARING & GRUBBING REQUIRED.

11. ALL DIMENSIONS AND GRADES SHOWN ON THE PLANS SHALL BE FIELD VERIFIED BY THE CONTRACTOR PRIOR TO CONSTRUCTION. CONTRACTOR SHALL NOTIFY THE ENGINEER IF ANY DISCREPANCIES EXIST PRIOR TO PROCEEDING WITH CONSTRUCTION FOR NECESSARY PLAN OR GRADE CHANGES. NO EXTRA COMPENSATION SHALL BE PAID TO THE CONTRACTOR FOR WORK HAVING TO BE REDONE DUE TO DIMENSIONS OR GRADES SHOWN INCORRECTLY ON THESE PLANS IF SUCH NOTIFICATION HAS NOT BEEN GIVEN.

12. CONTRACTOR TO COORDINATE WITH RESPONSIBLE UTILITY FOR PROTECTION/HOLDING OF UTILITY POLES, GUY WIRES, AND GUY ANCHORS IN AREAS OF CONSTRUCTION. CONTRACTOR SHALL INCLUDE THE COST OF PROTECTING UTILITY POLES IN THEIR OVERALL PRICE TO THE OWNER.

13. DAMAGE TO EXISTING ROADS DURING CONSTRUCTION SHALL BE REPAIRED BY THE CONTRACTOR PRIOR TO FINAL "AS-BUILT" SIGN-OFF FROM THE COUNTY.

14. THE CONTRACTOR SHALL NOTIFY FDOT 48 HOURS IN ADVANCE PRIOR TO INITIATING ANY WORK IN THE STATE RIGHT-OF-WAY.

15. ALL INDIVIDUAL RESIDENTIAL LOTS & OTHER AREAS NOT RESERVED FOR INFRASTRUCTURE SHALL REMAIN IN THEIR NATURAL, VEGETATED STATE UNTIL FUTURE PERMITTING ALLOWS FOR FURTHER DEVELOPMENT & LAND DISTURBING ACTIVITIES. I.E. CLEARING, FILLING LOTS OR PLACING FILL MATERIALS ON THEM, GRADING, EXCAVATING, TRENCHING, BERMING OR ANY OTHER ACTIVITY THAT ALTERS LAND TOPOGRAPHY OR VEGETATIVE COVER.

LEGEND

- EXISTING ASPHALT
- EXISTING CONCRETE
- JURISDICTIONAL WETLAND
- 25' WETLAND BUFFER
- EXISTING SURFACE WATERS
- DEMOLITION
- DEMOLITION LINE
- JURISDICTIONAL WETLAND LINE
- BOUNDARY LINE
- LOT LINE
- RIGHT-OF-WAY LINE
- W — WATER LINE
- FORCE MAIN
- OHU — OVERHEAD UTILITIES
- FOC — BURIED FIBER OPTIC CABLE
- -100- EXISTING CONTOUR
- SF/HB SF/HB STRAW BALE
- SF SF SF SILT FENCE
- UTILITY POLE
- LIGHT POLE
- GUY ANCHOR
- TRAFFIC SIGNAL BOX
- MAILBOX
- FIBER OPTIC VAULT
- FIBER OPTIC CABLE MARKER
- SIGN
- BENCHMARK
- FIRE HYDRANT
- FLUSH HYDRANT
- WATER METER
- WATER VALVE
- S SEWER MANHOLE
- D STORMWATER MANHOLE

VEGETATIVE NATURAL BUFFER NOTE:

ALL VEGETATIVE NATURAL BUFFERS SHALL REMAIN IN NATURAL VEGETATIVE STATE THROUGHOUT THE PROPERTY. THE VNB'S ARE USED TO TREAT THE REAR LOTS FOR STORM WATER TREATMENT.

THE SUBJECT PROPERTY AS SHOWN HEREON IS LOCATED IN FLOOD ZONE X, (MINIMAL RISK AREAS OUTSIDE THE 1-PERCENT AND .2-PERCENT-ANNUAL-CHANCE FLOODPLAINS. NO BFES OR BASE FLOOD DEPTHS ARE SHOWN WITHIN THESE ZONES), AS DETERMINED FROM THE FEDERAL EMERGENCY MANAGEMENT AGENCY FLOOD INSURANCE RATE MAP OF ESCAMBIA COUNTY, FLORIDA, COMMUNITY 120080, FIRM MAP PANEL NUMBERS 12033C0290G, MAP REVISION DATED SEPTEMBER 29, 2006, PRELIMINARY FIRM PANEL 12033C0033O & 12033C0034O.

REBOL-BATTLE & ASSOCIATES
Civil Engineers and Surveyors
2301 N. Ninth Avenue, Suite 300
Pensacola, Florida 32503
Telephone 850.438.9600 Fax 850.438.0448
EB 0006955 LB 7918

GEOTECHNICAL BORINGS LOCATION

BROOKHAVEN PHASE 4
A 193 LOT SUBDIVISION
PENSACOLA, FLORIDA

No.	DATE	REVISION

SEAL
NOT FOR CONSTRUCTION
PAUL A. BATTLE, P.E.
No. 53126
6/15/22
STATE OF FLORIDA
PAUL A. BATTLE, P.E.
No. 53126

Dr. By:
Ck By: PAB
Job No.: 2015.035 F
Date: 6/1/2022

DRAWING No.
C1.1
SHEET 2

This drawing is the property of Rebol-Battle & Associates, and may not be reproduced without written permission

GENERAL NOTES FOR SOIL EROSION AND SEDIMENT CONTROL:

1. ALL EROSION AND SEDIMENT CONTROL PRACTICES TO BE INSTALLED PRIOR TO ANY MAJOR SOIL DISTURBANCE, OR IN THEIR PROPER SEQUENCE, AND MAINTAINED UNTIL PERMANENT PROTECTION IS ESTABLISHED.

2. ANY DISTURBED AREAS THAT WILL BE LEFT EXPOSED MORE THAN 30 DAYS, AND NOT SUBJECT TO CONSTRUCTION TRAFFIC, WILL IMMEDIATELY RECEIVE A TEMPORARY SEEDING. IF THE SEASON PREVENTS THE ESTABLISHMENT OF A TEMPORARY COVER, THE DISTURBED AREAS WILL BE MULCHED WITH STRAW, OR EQUIVALENT MATERIAL, AT A RATE OF TWO (2) TONS PER ACRE, ACCORDING TO STATE STANDARDS.

3. PERMANENT VEGETATION TO BE SEEDED OR SODDED ON ALL EXPOSED AREAS WITHIN TEN (10) DAYS AFTER GRADING. MULCH TO BE USED AS NECESSARY FOR PROTECTION UNTIL SEEDING IS ESTABLISHED.

4. ALL WORK AND MATERIALS TO BE IN ACCORDANCE WITH THE FDOT "STANDARD SPECIFICATIONS FOR ROAD AND BRIDGE CONSTRUCTION", LATEST EDITION, SECTIONS 104, 570, 575 AND 980 TO 986.

*5. A BITUMINOUS CONCRETE BASE COURSE WILL BE APPLIED IMMEDIATELY FOLLOWING ROUGH GRADING AND INSTALLATION OF IMPROVEMENTS IN ORDER TO STABILIZE STREETS, ROADS, DRIVEWAYS AND PARKING AREAS. IN AREAS WHERE NO UTILITIES ARE PRESENT, THE BITUMINOUS CONCRETE BASE SHALL BE INSTALLED WITHIN 15 DAYS OF THE PRELIMINARY GRADING.

*6. IMMEDIATELY FOLLOWING INITIAL DISTURBANCE OR ROUGH GRADING, ALL CRITICAL AREAS SUBJECT TO EROSION (I.E. STEEP SLOPES AND ROADWAY EMBANKMENTS) WILL RECEIVE A TEMPORARY SEEDING IN COMBINATION WITH STRAW MULCH OR A SUITABLE EQUIVALENT, AT A THICKNESS OF TWO (2) TO FOUR (4) INCHES MIXED WITH THE TOP TWO (2) INCHES OF SOIL, ACCORDING TO STATE STANDARDS.

*7. ANY STEEP SLOPES RECEIVING PIPELINE INSTALLATION WILL BE BACKFILLED AND STABILIZED DAILY, AS THE INSTALLATION PROCEEDS (I.E. SLOPES GREATER THAN 3:1).

*8. A CRUSHED LIMEROCK, VEHICLE WHEEL-CLEANING BLANKET SHALL BE INSTALLED AT THE CONTRACTOR'S STAGING YARD AND/OR STOCKPILE AREAS TO PREVENT OFF-SITE TRACKING OF SEDIMENT BY CONSTRUCTION VEHICLES ONTO PUBLIC ROADS. BLANKET SHALL BE 15FT. X 50FT. X 6IN. (MINIMUM), CRUSHED LIMEROCK 2 1/2 INCHES IN DIAMETER. SAID BLANKET SHALL BE UNDERLAIN WITH A FDOT CLASS 3 SYNTHETIC FILTER FABRIC AND MAINTAINED IN GOOD ORDER.

9. AT THE TIME WHEN THE SITE PREPARATION FOR PERMANENT VEGETATIVE STABILIZATION IS GOING TO BE ACCOMPLISHED, ANY SOIL THAT WILL NOT PROVIDE A SUITABLE ENVIRONMENT TO SUPPORT ADEQUATE VEGETATIVE GROUND COVER, SHALL BE REMOVED OR TREATED IN SUCH A WAY THAT WILL PERMANENTLY ADJUST THE SOIL CONDITIONS AND RENDER IT
SUITABLE FOR VEGETATIVE GROUND COVER. IF THE REMOVAL OR TREATMENT OF THE SOIL WILL NOT PROVIDE SUITABLE CONDITIONS, NON-VEGETATIVE MEANS OF PERMANENT GROUND STABILIZATION WILL HAVE TO BE EMPLOYED.

*10. CONDUIT OUTLET PROTECTION MUST BE INSTALLED AT ALL REQUIRED OUTFALLS PRIOR TO THE DRAINAGE SYSTEM BECOMING OPERATIONAL.

11. UNFILTERED DEWATERING IS NOT PERMITTED. THE CONTRACTOR SHALL TAKE ALL NECESSARY PRECAUTIONS DURING ALL DEWATERING OPERATIONS TO MINIMIZE SEDIMENT TRANSFER.

12. SHOULD THE CONTROL OF DUST AT THE SITE BE NECESSARY, THE SITE WILL BE SPRINKLED UNTIL THE SURFACE IS WET, TEMPORARY VEGETATION COVER SHALL BE ESTABLISHED OR MULCH SHALL BE APPLIED IN ACCORDANCE WITH STATE STANDARDS FOR EROSION CONTROL.

13. ALL SOIL WASHED, DROPPED, SPILLED OR TRACKED OUTSIDE THE LIMIT OF DISTURBANCE OR ONTO PUBLIC RIGHTS-OF-WAY WILL BE REMOVED IMMEDIATELY.

14. THE CONTRACTOR SHALL BE RESPONSIBLE FOR ANY EROSION OR SEDIMENTATION THAT MAY OCCUR BELOW STORMWATER OUTFALLS OR OFFSITE AS A RESULT OF CONSTRUCTION OF THE PROJECT.

15. ALL SOIL STOCKPILES ARE TO BE TEMPORARILY STABILIZED IN ACCORDANCE WITH SOIL EROSION AND SEDIMENT CONTROL NOTE NUMBER 2 (ABOVE).

16. THE SITE SHALL AT ALL TIMES BE GRADED AND MAINTAINED SUCH THAT ALL STORM WATER RUNOFF IS DIVERTED TO SOIL EROSION AND SEDIMENT CONTROL FACILITIES.

17. ALL SEDIMENTATION STRUCTURES SHALL BE INSPECTED AND MAINTAINED REGULARLY.

18. ALL CATCH BASIN INLETS SHALL BE PROTECTED WITH HAY BALES AS SHOWN ON DETAIL.

19. THE CONTRACTOR SHALL PREPARE A PLAN FOR THE PROPER DEWATERING AND DOWNSTREAM SILTATION PROTECTION OF EACH STREAM CROSSING PRIOR TO EXCAVATING THE STREAM BED. PLAN SHALL BE FORWARDED TO THE ENGINEER FOR APPROVAL. THE ENGINEER SHALL BE NOTIFIED FOR INSPECTION PRIOR TO EACH STREAM CROSSING CONSTRUCTION.

20. ANY AREAS USED FOR THE CONTRACTOR'S STAGING, INCLUDING BUT NOT LIMITED TO, TEMPORARY STORAGE OF STOCKPILED MATERIALS (E.G. CRUSHED STONE, QUARRY PROCESS STONE, SELECT FILL, EXCAVATED MATERIALS, ETC.), SHALL BE ENTIRELY PROTECTED BY A SILT FENCE ALONG THE LOW ELEVATION SIDE TO CONTROL SEDIMENT RUNOFF.

21. SAG FILTERS IN CURB THROATS ARE NOT AN ALLOWABLE SEDIMENT CONTROL METHOD.

* WHERE APPLICABLE

TEMPORARY SEEDING DETAILS:

SEED BED PREPARATION:

SOIL TO BE THOROUGHLY PULVERIZED BY DISK-HARROWING AND BE LOOSE AND REASONABLY SMOOTH. APPLY FERTILIZER AT A RATE OF 260 LBS/ACRE OF 16-16-16 OR EQUIVALENT, APPLY DOLOMITIC LIMESTONE AT A RATE OF 800 TO 1000 LBS./ACRE TO PROVIDE A SOIL pH OF 5.5 TO 6.5, LIME & FERTILIZER TO BE WORKED INTO THE TOPSOIL TO A DEPTH OF 4". ADD SANDY LOAM TOPSOIL TO A MINIMUM OF TWO (2) INCHES WHERE REQUIRED.

SEED MIXTURE

CONSISTING OF ANNUAL RYE (LOLIUM MULTIFLORUM) AT A RATE OF 174 LBS/ACRE.

PERMANENT SEEDING DETAILS:

SEED BED PREPARATION:

SOIL TO BE THOROUGHLY PULVERIZED BY DISK-HARROWING AND BE LOOSE AND REASONABLY SMOOTH. APPLY FERTILIZER AT A RATE OF 260 LBS/ACRE OF 16-16-16 OR EQUIVALENT, APPLY DOLOMITIC LIMESTONE AT A RATE OF 800 TO 1000 LBS./ACRE TO PROVIDE A SOIL pH OF 5.5 TO 6.5, LIME & FERTILIZER TO BE WORKED INTO THE TOPSOIL TO A DEPTH OF 4". ADD SANDY LOAM TOPSOIL TO A MINIMUM OF TWO (2) INCHES WHERE REQUIRED.

SEED MIXTURE CONSISTING OF	RATE	PURITY	GERMINATION
ARGENTINE BAHIA	260 LBS/AC.	95%	80%
PENSACOLA BAHIA	260 LBS/AC.	95%	40%(MIN.)-80%(TOTAL)

SODDING:

SOD SHALL BE WELL ROOT MATTED CENTIPEDE OR BAHIA GRASS COMMERCIALLY CUT TO A MINIMUM DIMENSION OF 12" x 24" A MAXIMUM OF 72 HOURS PRIOR TO PLACEMENT. SOD SHALL BE LIVE, FRESH AND UNINJURED, REASONABLY FREE OF WEEDS AND OTHER GRASSES, WITH A HEAVY SOIL MAT ADHERING TO THE ROOT SYSTEM. SOD SHALL BE GROWN, CUT, AND SUPPLIED BY A STATE CERTIFIED GROWER.

TRAFFIC CONTROL STANDARDS:

1. CONSTRUCTION TRAFFIC SHALL BE RESTRICTED TO ONSITE ACCESS BY MEANS SO DESIGNATED BY THE ENGINEER, POLICE/SHERIFF DEPARTMENT, ESCAMBIA COUNTY HIGHWAY DEPARTMENT, AND/OR THE FLORIDA DEPARTMENT OF TRANSPORTATION.
2. TRAFFIC DURING WET WEATHER SHALL BE MINIMIZED AND APPROPRIATE ROADWAY AND SITE CLEAN-UP SHALL BE PROVIDED BY THE CONTRACTOR AS SOON AS WEATHER CONDITIONS PERMIT.

TREE PROTECTION:

1. DAMAGED TRUNKS OR EXPOSED ROOTS WILL BE PAINTED IMMEDIATELY WITH A GOOD GRADE OF "TREE PAINT".

2. TREE LIMB REMOVAL, WHERE NECESSARY, WILL BE DONE FLUSH TO TRUNK OR MAIN BRANCH AND THAT AREA PAINTED IMMEDIATELY WITH A GOOD GRADE OF TREE PAINT.

DUST CONTROL:

1. ALL AREAS OF CLEARING AND EMBANKMENT AS WELL AS CONSTRUCTION HAUL ROADS SHALL BE TREATED AND MAINTAINED IN SUCH A MANNER AS TO MINIMIZE ANY DUST GENERATION.

2. DISTURBED AREAS SHALL BE MAINTAINED IN A ROUGH GRADED CONDITION AND TEMPORARILY SEEDED AND/OR MULCHED UNTIL PROPER WEATHER CONDITIONS EXIST FOR THE ESTABLISHMENT OF PERMANENT VEGETATION COVER.

3. IN EVENT OF EMERGENCY CONDITIONS, TILLAGE WILL BE SATISFACTORY FREE BEFORE SOIL BLOWING STARTS.

4. CALCIUM CHLORIDE MAY BE APPLIED TO UNPAVED ROADWAY AREAS, ONLY, SUBJECT TO THE ENGINEER'S APPROVAL AND CONFORMANCE WITH FDOT STANDARD SPECIFICATIONS, SECTION 102-5, LATEST EDITION.

PROPOSED SEQUENCE OF CONSTRUCTION:

1. THE INSTALLATION OF ALL SEDIMENT AND EROSION CONTROL DEVICES THAT CAN BE PLACED PRIOR TO ANY MAJOR SOIL DISTURBANCES.

2. CLEAR AND REMOVE ALL EXISTING VEGETATION IN THOSE AREAS WHERE NECESSARY. ALL REMAINING VEGETATION IS TO BE PROPERLY PROTECTED AND IS TO REMAIN IN ITS NATURAL STATE. TOPSOIL IN AREAS TO BE DISTURBED IS TO BE STRIPPED TO A MINIMUM DEPTH OF SIX (6) INCHES AND STOCKPILED SEPARATELY FROM FROM OTHER EXCAVATED SOIL(S)

3. THE IMMEDIATE INSTALLATION OF ALL REMAINING SEDIMENT AND EROSION CONTROL DEVICES.

4. PERFORM ALL DEMOLITION WORK.

5. CONSTRUCT ALL UNDERGROUND UTILITIES AND STORM DRAIN SYSTEMS.

6. CONSTRUCT ROADS (SUBGRADE, CURB & GUTTER, BASE, PAVEMENT, SIDEWALKS AND LANDSCAPING).

7. COMPLETE STORMWATER PONDS.

8. UPON THE COMPLETION OF THE CONSTRUCTION ACTIVITIES, PROVIDE RESTORATION, FINE GRADE REMAINDER OF SITE, RESPREAD STOCKPILED TOPSOIL AND STABILIZE WITH PERMANENT VEGETATIVE COVER AND LANDSCAPING.

9. THE REMOVAL OF APPROPRIATE TEMPORARY SEDIMENT AND EROSION CONTROL DEVICES.

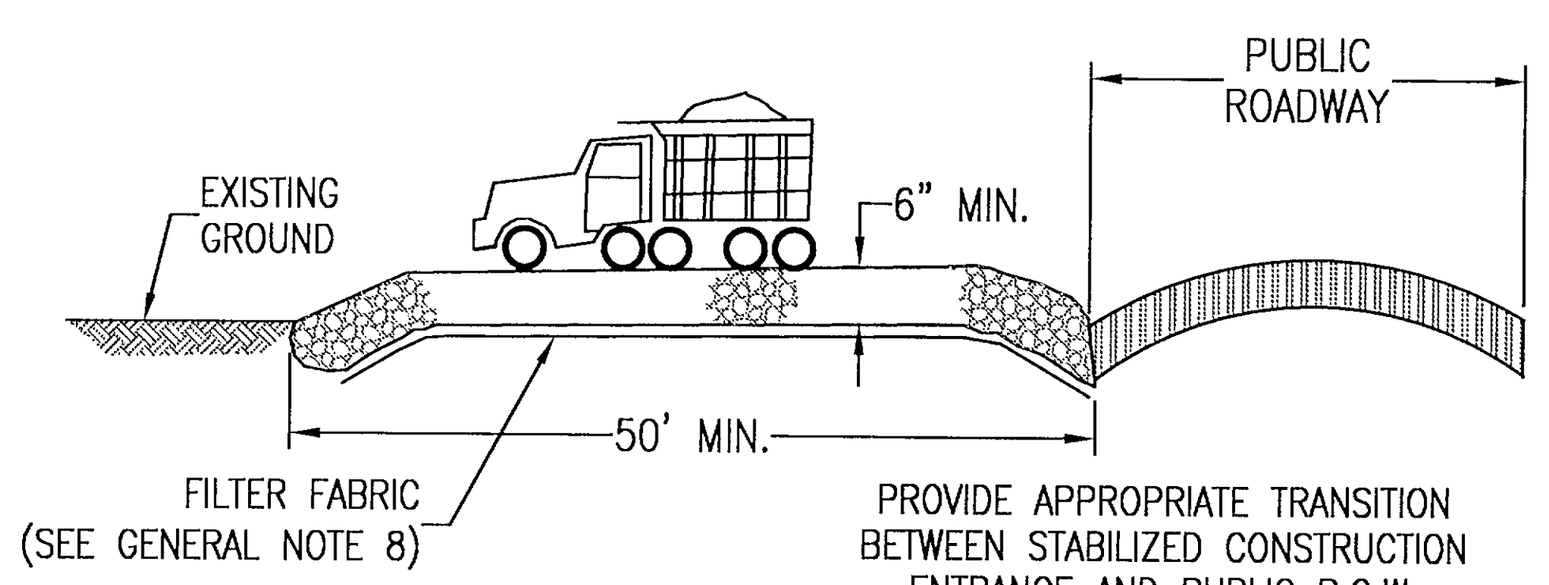

STABILIZED CONSTRUCTION ENTRANCE DETAIL

N.T.S.

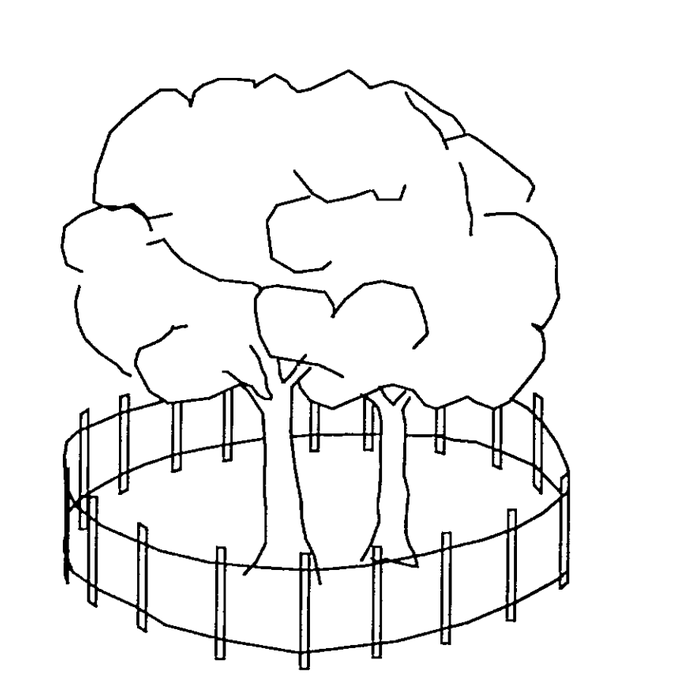

NOTE:
ALL PROTECTED TREES AS SHOWN ON THE PLANS TO REMAIN ARE TO BE PROTECTED DURING CONSTRUCTION. THE CONTRACTOR SHALL INSTALL ORANGE CONSTRUCTION FENCING AT THE DRIP LINE OF EACH PROTECTED TREE BEFORE WORKING IN THE VICINITY OF THE TREE.

TREE BARRICADE DETAIL

N.T.S.

DESCRIPTION:
FILTER BAGS WILL BE USED AS AN EFFECTIVE FILTER MEDIUM TO CONTAIN SAND, SILT AND FINES WHEN TRENCH DEWATERING. THE WETLAND FILTER BAG CONTAINS THESE MATERIALS WHILE ALLOWING THE WATER TO FLOW THROUGH THE FABRIC.

INSTALLATION:
WETLAND FILTER BAGS MAY REPLACE HAY BALE CORRALS DURING TRENCH DEWATERING, AT THE DISCRETION OF THE ENGINEER INSPECTOR. TO INSURE PROPER INSTALLATION, FILTER BAGS WILL BE PLACED ON RELATIVELY FLAT TERRAIN FREE OF BRUSH AND STUMPS TO AVOID RUPTURES AND PUNCTURES. PROPER INSTALLATION REQUIRES CUTTING A SMALL HOLE IN THE CORNER OF THE BAG, INSERTING THE PUMP DISCHARGE HOSE, AND THEN SECURING THE DISCHARGE HOSE TO THE BAG WITH A HOSE CLAMP. FILTER BAGS WILL BE PLACED AS FAR AWAY FROM FLOWING STREAMS AND WETLANDS AS POSSIBLE.

MAINTENANCE:
PRIOR TO REMOVING A BAG FROM THE HOSE, THE BAG WILL BE TIED OFF BELOW THE END OF THE HOSE ALLOWING THE BAG TO DRAIN. DRAINAGE WILL NOT BE ALLOWED THROUGH THE INLET HOLE. TO AVOID RUPTURE, THE BAGS WILL BE ATTENDED AND PUMPING RATES MONITORED. ONCE THE BAG IS INFLATED TO A HEIGHT OF 4 FEET, PUMPING WILL STOP TO AVOID RUPTURE. FILTER BAGS USED DURING CONSTRUCTION WILL BE BUNDLED AND REMOVED FOR PROPER DISPOSAL.

SPECIFICATION:
FILTER BAGS ARE CONSTRUCTED OF NON-WOVEN GEOTEXTILE FABRIC. A MAXIMUM OF ONE SIX INCH DISCHARGE HOSE WILL BE ALLOWED PER FILTER BAG. BAG CAPACITY WILL BE EXCEEDED BEYOND 2,000 GALLONS PER MINUTE. TYPICAL BAG DIMENSIONS ARE 15 FEET BY 13.25 FEET. TO HELP PREVENT PUNCTURES, GEOTEXTILE FABRIC WILL BE PLACED BENEATH THE FILTER BAG WHEN USED IN WOODED LOCATIONS. UNATTENDED FILTER BAGS WILL BE ENCIRCLED WITH A HAY BALE OR SILT FENCE CORRAL. HOSE CLAMPS WILL BE USED TO SECURE THE DISCHARGE HOSE, WIRE OR STRING WILL NOT BE USED.

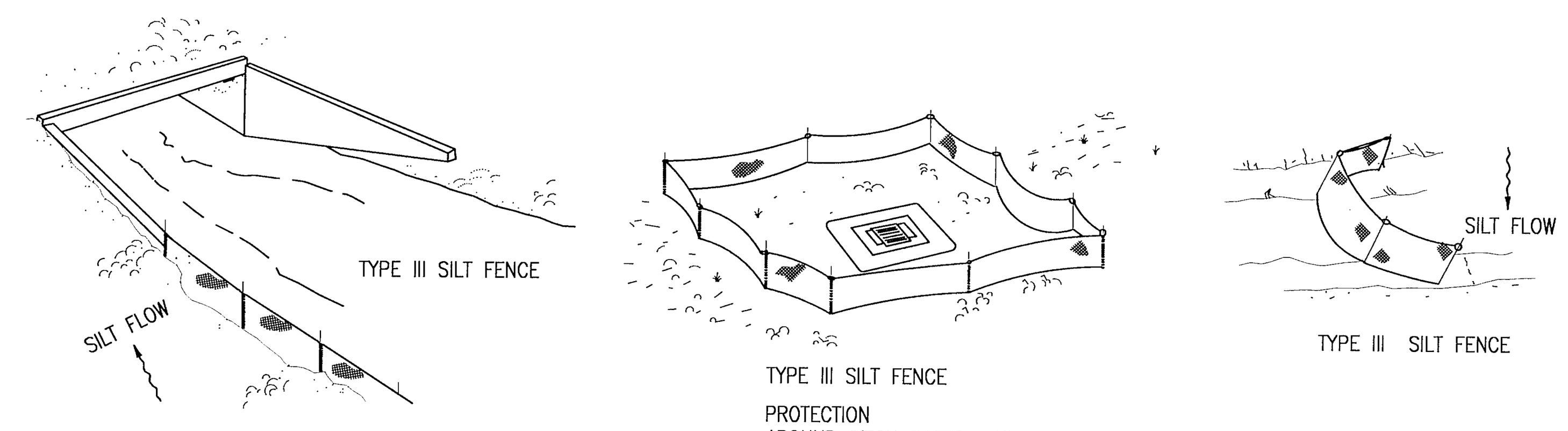

SILT FENCE APPLICATIONS

N.T.S.

DO NOT DEPLOY IN A MANNER THAT SILT FENCES WILL ACT AS A DAM ACROSS PERMANENT FLOWING WATERCOURSES. SILT FENCES ARE TO BE USED AT UPLAND LOCATIONS AND TURBIDITY BARRIERS USED AT PERMANENT BODIES OF WATER.

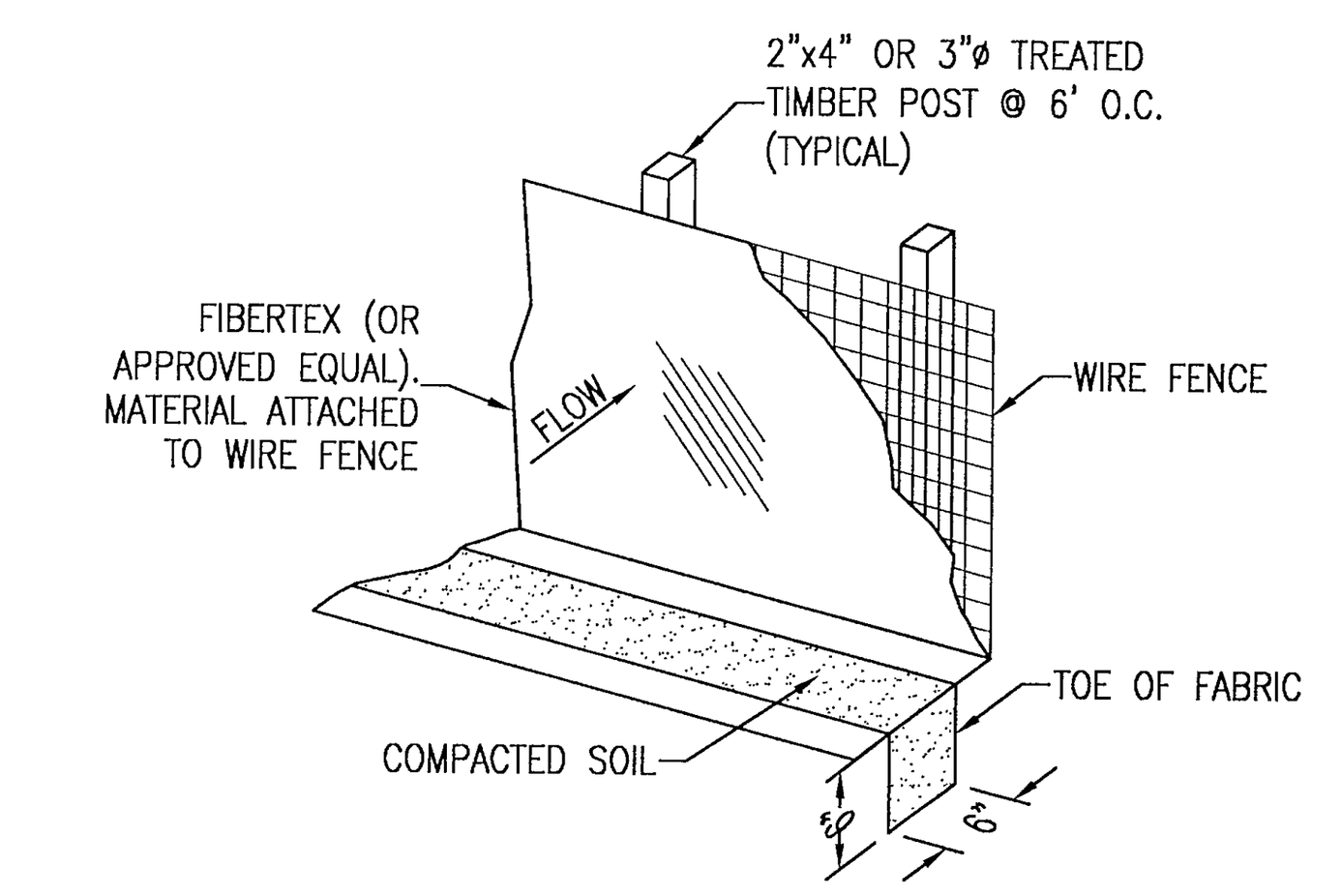

SILT FENCE DETAIL

N.T.S.

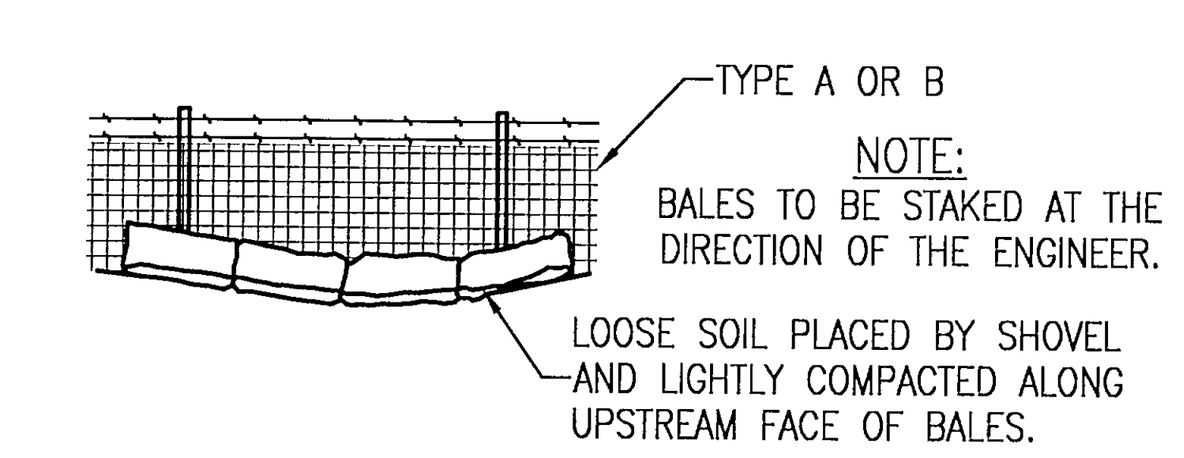

STRAW BALES BACKED BY FENCE

N.T.S.

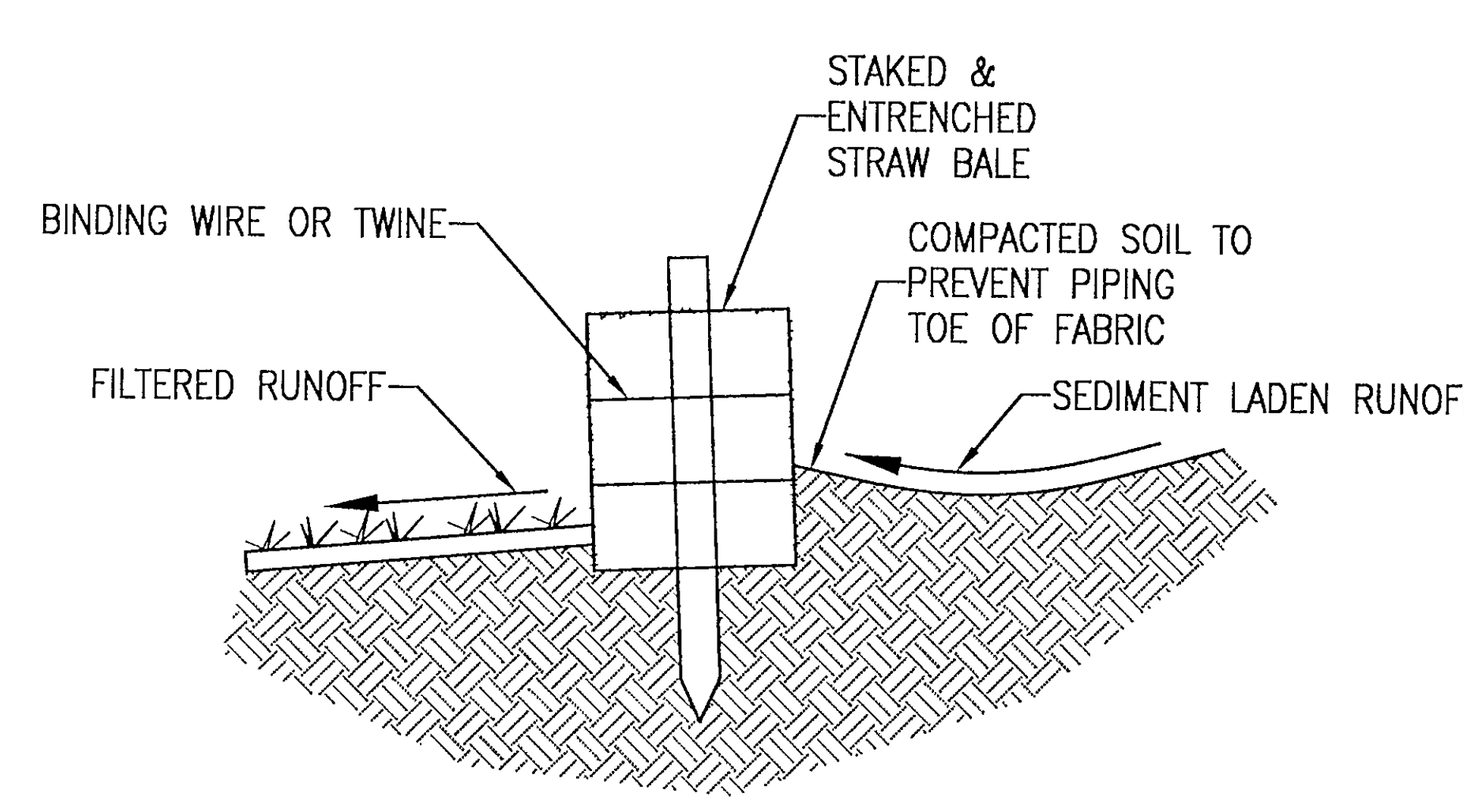

STRAW BALE DETAIL

N.T.S.

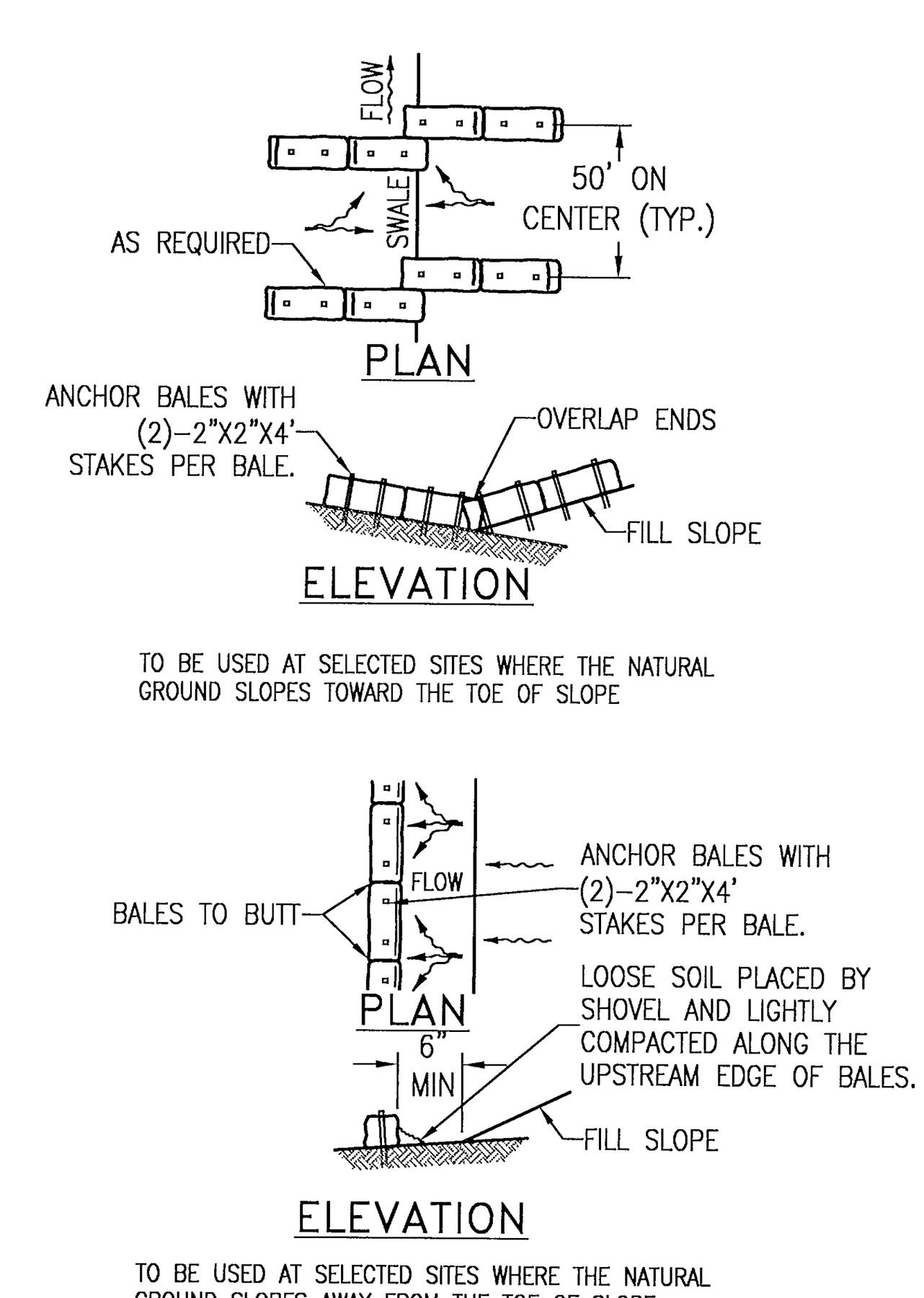

BARRIERS FOR FILL SLOPES

N.T.S.

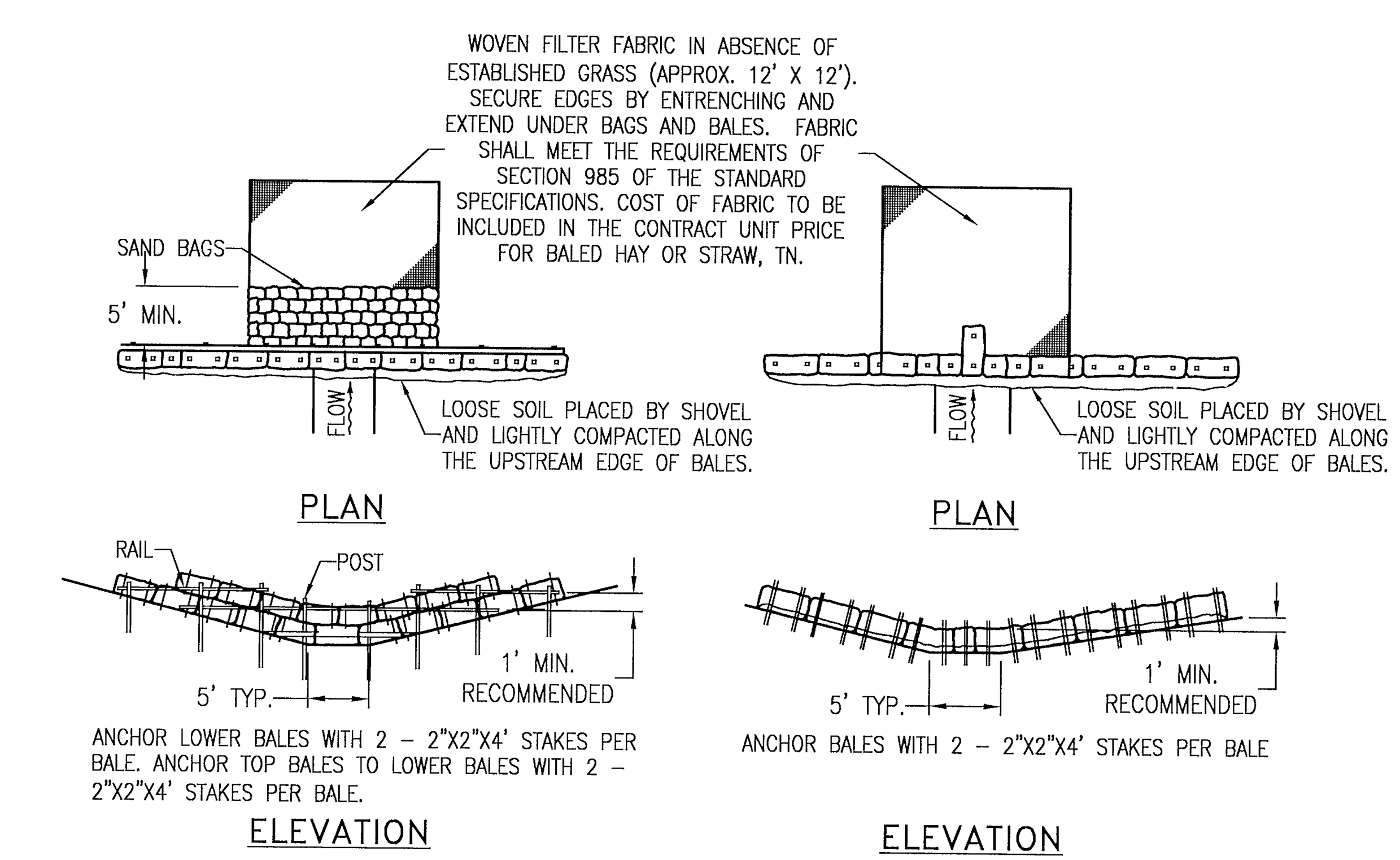

APPLICATION AND SPACING: THE USE OF TYPES I & II BALE BARRIERS SHOULD BE LIMITED TO THE CONDITIONS OUTLINED IN CHART I, SHEET 1 OF 3, INDEX NO. 102

TYPE II TYPE I

BARRIER FOR UNPAVED DITCH

N.T.S.

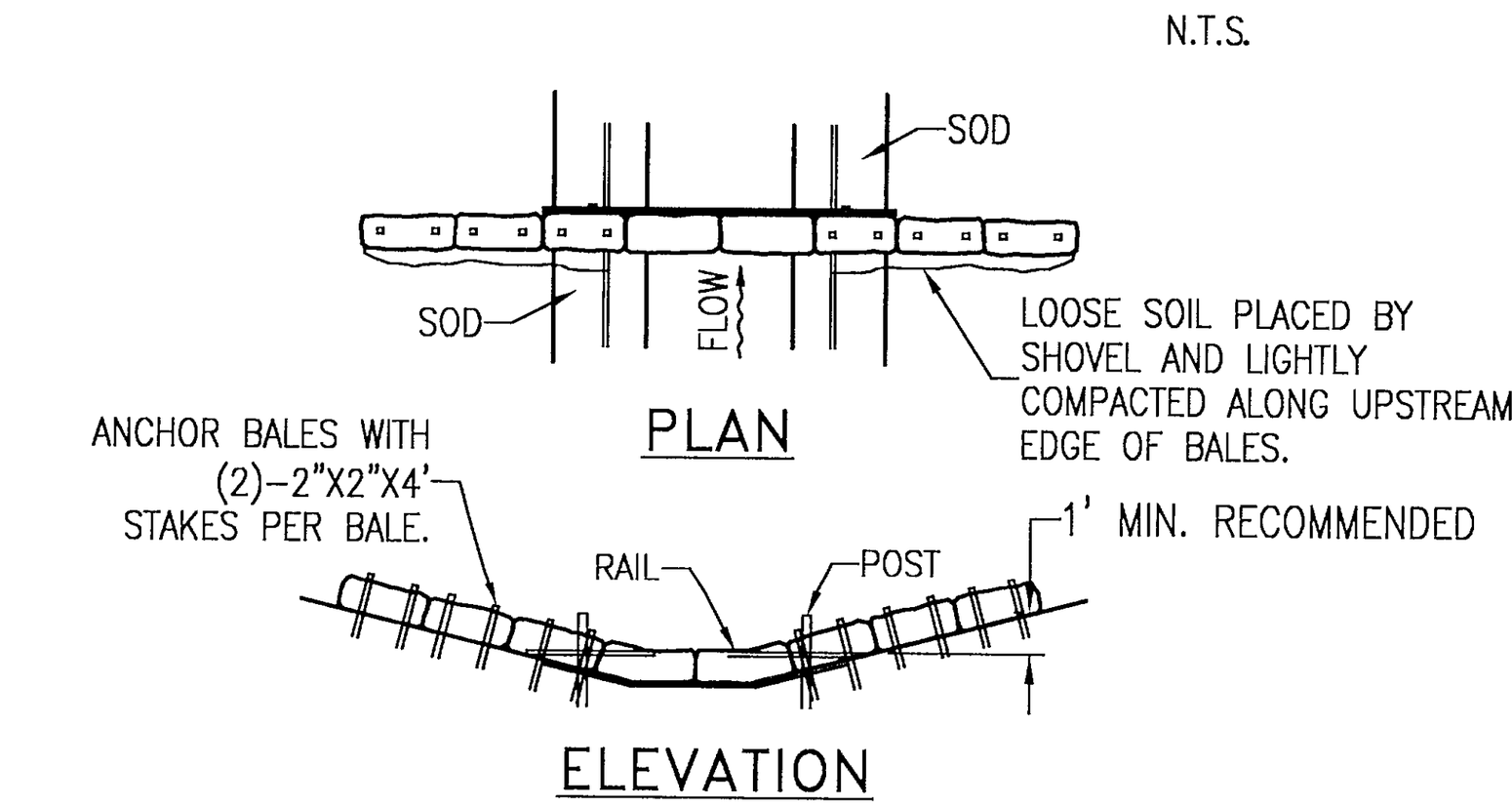

SPACING:
BALE BARRIERS FOR PAVED DITCHES SHOULD BE SPACED IN ACCORDANCE WITH CHART I, SHEET 1 OF 3, INDEX NO. 102

BARRIER FOR PAVED DITCH

N.T.S.

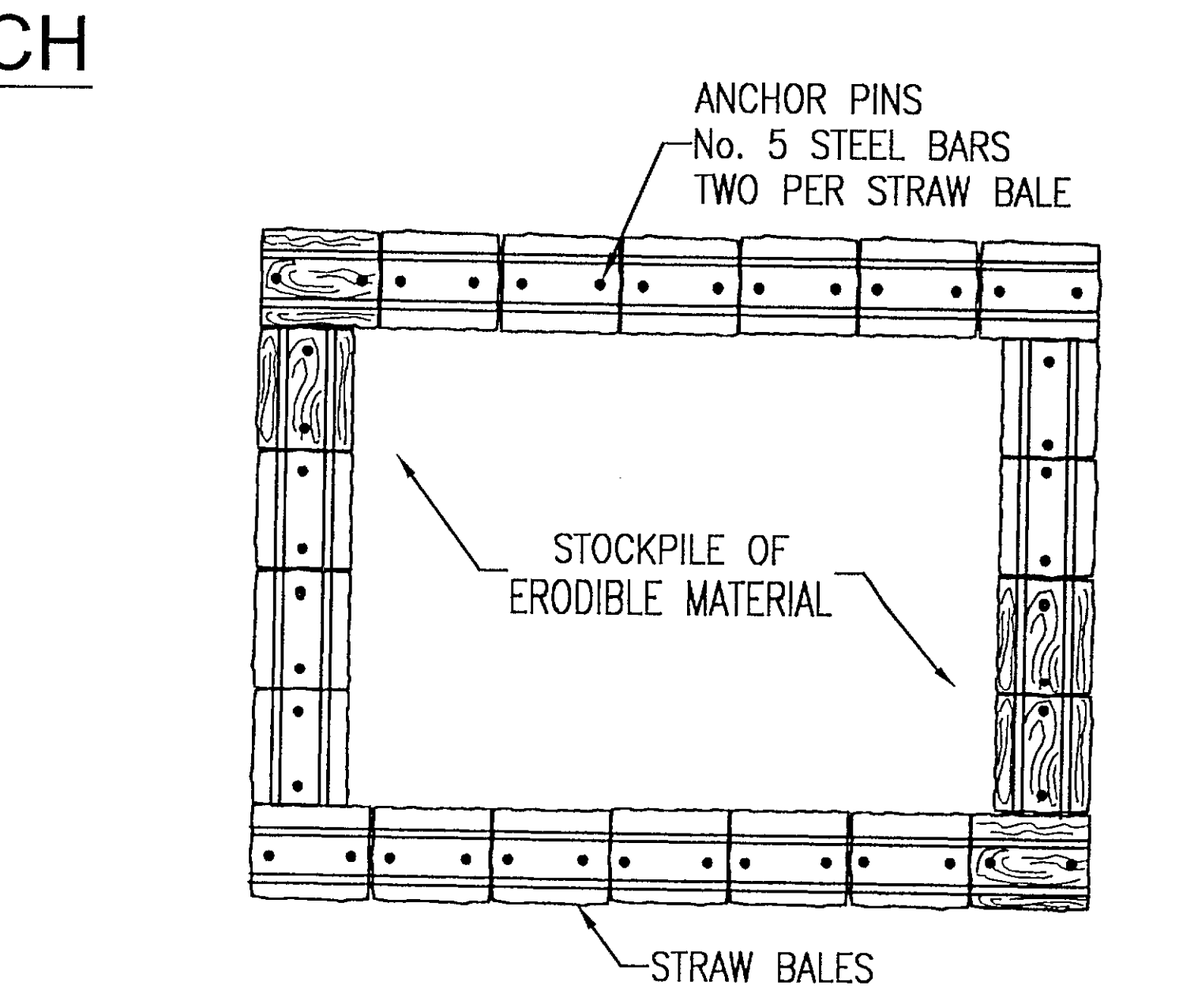

MATERIAL STOCKPILE DETAIL

N.T.S.

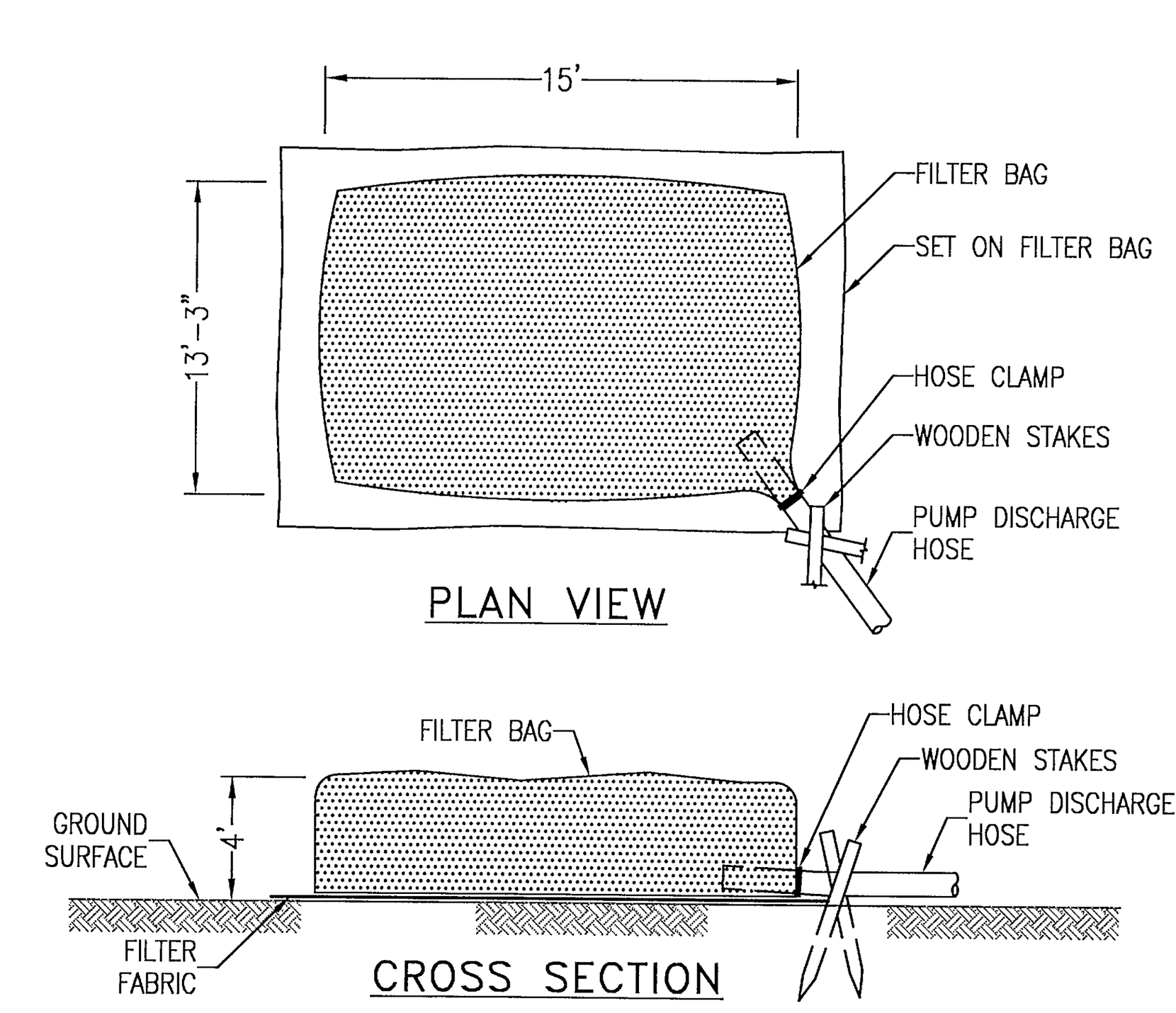

FILTER BAG DETAIL FOR TRENCH DEWATERING OPERATIONS

N.T.S.

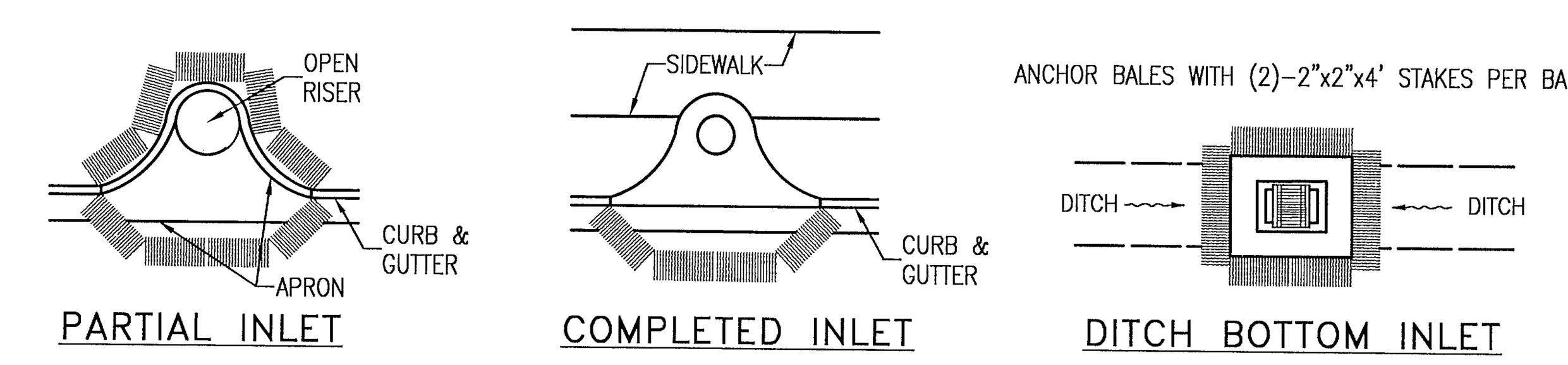

PROTECTION AROUND INLETS OR SIMILAR STRUCTURES

N.T.S.

RBA
REBOL-BATTLE & ASSOCIATES
Civil Engineers and Surveyors
2301 N. Ninth Avenue, Suite 300
Pensacola, Florida 32503
Telephone 850.438.0400 Fax 850.438.0448
EB 000009657 LB7916

EROSION CONTROL DETAILS

BROOKHAVEN PHASE 4
A 193 LOT SUBDIVISION
PENSACOLA, FLORIDA

No.	DATE	REVISION

SEAL
NOT FOR CONSTRUCTION
PAUL A. BATTLE LICENSE No. 53126 STATE OF FLORIDA PROFESSIONAL ENGINEER
6/15/22
PAUL A. BATTLE, P.E.
No. 53126

Dr. By:
Ck By: PAB
Job No.: 2015.035 F
Date: 6/1/2022

DRAWING No.
C1.2
SHEET 3

This drawing is the property of Rebol-Battle & Associates, and may not be reproduced without written permission.

STORM WATER POLLUTION PREVENTION PLAN

1.0 BACKGROUND & REQUIREMENTS:

1.1 INTRODUCTION:

THE REFERENCED SUPPORT DOCUMENTATION FOR THIS STORM WATER POLLUTION PREVENTION PLAN (SWPPP) IS THE UNITED STATES ENVIRONMENTAL PROTECTION AGENCY'S (EPA) STORM WATER MANAGEMENT FOR CONSTRUCTION ACTIVITIES, DEVELOPING POLLUTION PREVENTION PLANS AND BEST MANAGEMENT PRACTICES SUMMARY GUIDANCE (EPA 833–R–92–001) AND STORM WATER MANAGEMENT FOR CONSTRUCTION ACTIVITIES, DEVELOPING POLLUTION PREVENTION PLANS AND BEST MANAGEMENT PRACTICES (EPA 832–R–92–005). THIS SWPPP IS DESIGNED TO PROTECT ONSITE AND ADJACENT NATURAL RESOURCES, INCLUDING BUT NOT LIMITED TO, WETLANDS, MARSHES, BAYOUS AND BAYS, WHILE PRESERVING WILDLIFE AND ARCHEOLOGICAL RESOURCES.

AN ENVIRONMENTAL RESOURCE PERMIT APPLICATION HAS BEEN SUBMITTED TO THE
NWFWMD DECEMBER 2020

1.2 NOTICE OF INTENT (NOI):

RULE 62–621.300(4), FAC REQUIRES THE CONSTRUCTION OPERATOR OF A SITE THAT DISTURBS ONE OR MORE ACRES TO OBTAIN COVERAGE FROM THE GENERIC PERMIT FOR STORMWATER DISCHARGE FROM LARGE AND SMALL CONSTRUCTION ACTIVITIES. THE CONTRACTOR IS REQUIRED TO SUBMIT A NOTICE OF INTENT TO USE GENERIC PERMIT FOR STORMWATER DISCHARGE FROM LARGE AND SMALL CONSTRUCTION ACTIVITIES (FDEP FORM 62–621.300(4)(B)) ALONG WITH THE APPROPRIATE APPLICATION FEE TO THE FOLLOWING ADDRESS 48 HOURS PRIOR TO COMMENCING CONSTRUCTION:

NPDES STORMWATER NOTICES CENTER, MS # 2510
FLORIDA DEPARTMENT OF ENVIRONMENTAL PROTECTION
2600 BLAIR STONE ROAD
TALLAHASSEE, FLORIDA 32399–2400

THIS FORM CAN BE OBTAINED FROM FDEP'S WEBSITE (WWW.DEP.STATE.FL.US) OR BY CONTACTING FDEP. PLEASE NOTE THAT THE CURRENT APPLICATION FEE IS $300; HOWEVER, THIS FEE IS SUBJECT TO CHANGE WITHOUT NOTICE. ALWAYS REFER TO THE MOST CURRENT VERSION OF RULE 62–4.050(4)(D), FAC TO CONFIRM THE AMOUNT BEFORE SUBMITTING PAYMENT. IF CONSTRUCTION ACTIVITY EXCEEDS FIVE YEARS, THE CONTRACTOR MUST RE–APPLY FOR COVERAGE.

1.3 STORMWATER POLLUTION PREVENTION PLAN (SWPPP):

THE CONTRACTOR IS REQUIRED TO CERTIFY THIS STORMWATER POLLUTION PREVENTION PLAN (SWPPP) BELOW PRIOR TO SUBMITTING THE NOI. THIS SWPPP IS NOT REQUIRED TO BE SUBMITTED WITH THE NOI, BUT IS REQUIRED TO BE KEPT ON SITE DURING ALL PHASES OF CONSTRUCTION. BECAUSE EROSION AND SEDIMENT CONTROLS AND CONSTRUCTION METHODS VARY SIGNIFICANTLY FROM CONTRACTOR TO CONTRACTOR, THE CONTRACTOR CAN PROPOSE ALTERNATIVE METHODS TO THIS SWPPP THAT ARE EQUAL OR BETTER AT CONTROLLING EROSION AND SEDIMENTATION. AT A MINIMUM, THE CONTRACTOR MUST FOLLOW THE EROSION CONTROL PLAN SPECIFIED IN THE CONSTRUCTION PLANS AND DOCUMENTS. ANY MODIFICATIONS TO THIS SWPPP MUST BE DOCUMENTED AND KEPT WITH THE PLAN AS PART OF THE RECORDS KEEPING PROCESS TO BE IN FULL COMPLIANCE WITH THE CGP.

1.4 CONTRACTOR'S / SUBCONTRACTOR CERTIFICATION:

I CERTIFY UNDER PENALTY OF LAW THAT I UNDERSTAND, AND SHALL COMPLY WITH, THE TERMS AND CONDITIONS OF THE STATE OF FLORIDA GENERIC PERMIT FOR STORMWATER DISCHARGE FROM LARGE AND SMALL CONSTRUCTION ACTIVITIES AND THIS STROMWATER POLLUTION PREVENTION PLAN PREPARED THEREUNDER.

PRINT & SIGN NAME ____________ ____________

COMPANY & ADDRESS ____________ ____________ ____________

NAME & TITLE (PRINT)

____
SIGNATURE DATE

1.5 RESPONSIBLE AUTHORITY CERTIFICATION:

I CERTIFY UNDER PENALTY OF LAW THAT THIS DOCUMENT AND ALL ATTACHMENTS WERE PREPARED UNDER MY DIRECTION OR SUPERVISION IN ACCORDANCE WITH A SYSTEM DESIGNED TO ASSURE THAT QUALIFIED PERSONNEL GATHERED AND EVALUATED THE INFORMATION SUBMITTED. BASED ON MY INQUIRY OF THE PERSON OR PERSONS WHO MANAGE THE SYSTEM, OR THOSE PERSONS DIRECTLY RESPONSIBLE FOR GATHERING THE INFORMATION, THE INFORMATION SUBMITTED IS, TO THE BEST OF MY KNOWLEDGE AND BELIEF, TRUE, ACCURATE, AND COMPLETE. I AM AWARE THAT THERE ARE SIGNIFICANT PENALTIES FOR SUBMITTING FALSE INFORMATION, INCLUDING THE POSSIBILITY OF FINE AND IMPRISONMENT FOR KNOWING VIOLATIONS.

PRINT & SIGN NAME ____________

NAME & TITLE (PRINT) ____________

COMPANY & ADDRESS ____________ ____________ ____________

____
SIGNATURE DATE

1.6 NOTICE OF TERMINATION (NOT):

THE CONTRACTOR IS REQUIRED TO SUBMIT A NOTICE OF TERMINATION OF GENERIC PERMIT COVERAGE (FDEP FORM 62–621.300(6)) UPON CONSTRUCTION COMPLETION TO DISCONTINUE PERMIT COVERAGE. THE NOT IS TO BE SUBMITTED TO THE FOLLOWING ADDRESS:

NPDES STORMWATER NOTICES CENTER, MS # 2510
FLORIDA DEPARTMENT OF ENVIRONMENTAL PROTECTION
2600 BLAIR STONE ROAD
TALLAHASSEE, FLORIDA 32399–2400

THIS FORM CAN BE OBTAINED FROM FDEP'S WEBSITE (WWW.DEP.STATE.FL.US) OR BY CONTACTING FDEP. THE NOT CAN NOT BE SUBMITTED UNTIL ALL DISTURBED SOILS AT THE CONSTRUCTION SITE HAVE BEEN FINALLY STABILIZED AND TEMPORARY EROSION AND SEDIMENT CONTROL MEASURES HAVE BEEN REMOVED OR WILL BE REMOVED AT AN APPROPRIATE TIME. FINAL STABILIZATION MEANS THAT ALL SOIL DISTURBING ACTIVITIES AT THE SITE HAVE BEEN COMPLETED AND THAT A UNIFORM PERENNIAL VEGETATIVE COVER WITH A DENSITY OF 70 PERCENT OF THE COVER FOR UNPAVED AREAS AND AREAS NOT COVERED BY PERMANENT STRUCTURES HAS BEEN ESTABLISHED, OR EQUIVALENT STABILIZATION MEASURES HAVE BEEN EMPLOYED. IF CONSTRUCTION ACTIVITY EXCEEDS FIVE YEARS, THE CONTRACTOR MUST RE–APPLY FOR COVERAGE.

1.7 APPLICATION INFORMATION:

PROJECT ADDRESS:	BLUE ANGEL PARKWAY PENSACOLA, FL 32504
LATITUDE: LONGITUDE:	N 30.398018° W 87.340685°
WATER MANAGEMENT DISTRICT:	NORTHWEST FLORIDA (NWFWMD)
MS4 OPERATOR NAME:	ESCAMBIA COUNTY
RECEIVING WATER NAME:	PERDIDO BAY

2.0 SITE DESCRIPTION:

2.1 NATURE OF CONSTRUCTION ACTIVITIES:

THIS PROJECT INVOLVES THE CONSTRUCTION OF A 51 LOT RESIDENTIAL SUBDIVISION. CONSTRUCTION INCLUDES ROADWAYS, UTILITIES AND STORMWATER COLLECTION/MANAGEMENT SYSTEM.

2.2 SEQUENCE OF MAJOR SOIL DISTURBING ACTIVITIES:

THE FOLLOWING SEQUENCE OF MAJOR ACTIVITIES SHALL BE FOLLOWED UNLESS THE CONTRACTOR CAN PROPOSE AN ALTERNATIVE THAT IS EQUAL TO OR BETTER AT CONTROLLING EROSION AND SEDIMENTATION. THE DETAILED SEQUENCE FOR THE ENTIRE PROJECT CAN VARY SIGNIFICANTLY FROM CONTRACTOR TO CONTRACTOR. THE CONTRACTOR IS RESPONSIBLE FOR DOCUMENTING ANY CHANGES.

1. CLEAR, GRUB AND PERFORM ALL DEMOLITION WORK.
2. COMPLETE ROUGH GRADING OF THE POND AND DIRECT ALL STORMWATER RUNOFF TO THE POND(S).
3. CONSTRUCT ALL UNDERGROUND UTILITIES AND STORM DRAIN SYSTEM.
4. CONSTRUCT ROADS (SUBGRADE, CURB & GUTTER, BASE, PAVEMENT, SIDEWALKS, AND LANDSCAPING).
5. COMPLETE STORMWATER PONDS.

2.3 AREA ESTIMATES:

ONSITE AREA:	10.5 ACRES
OFFSITE AREA:	0.00 ACRES
TOTAL AREA:	10.5 ACRES
AREA TO BE DISTURBED:	10.5 ACRES

2.4 RUNOFF DATA:

RUNOFF COEFFICIENTS (C):

BEFORE:	TOTAL COMPOSITE C =	0.20 AND 0.95
DURING:	VARIES BETWEEN =	0.20 AND 0.65
AFTER:	VARIES BETWEEN =	0.20 AND 0.65
TOTAL COMPOSITE C =		0.66

SOILS DATA:
THE SOILS LOCATED AT THE SITE ARE PREDOMINATELY VERY LOOSE TO LOOSE SLIGHTLY SILTY SANDS. GROUNDWATER WAS ENCOUNTERED APPROXIMATELY 2.5 FT TO 5 FT DOWN. FOR MORE DETAILED SOILS INFORMATION, REFER TO THE GEOTECHNICAL SERVICES REPORT PREPARED BY NOVA.

DRAINAGE AREAS FOR EACH OUTFALL:

OUTFALL LOCATION	TOTAL AREA FLOWING TO POND	'C' COEFFICIENT
EXISTING CONVEYANCE PERDIDO BAY	10.5	0.66

2.5 SITE MAP:

THE CONSTRUCTION PLANS ARE TO BE USED AS THE SITE MAPS. THE LOCATION OF THE REQUIRED INFORMATION IS DESCRIBED BELOW. THE SHEET NUMBERS FOR ALL THE ITEMS DISCUSSED BELOW ARE IDENTIFIED ON THE KEY SHEET OF THE CONSTRUCTION PLANS.

- DRAINAGE PATTERNS: ALL DRAINAGE PATTERNS ARE SHOWN ON THE GRADING & DRAINAGE PLANS.
- APPROXIMATE SLOPES: APPROXIMATE SLOPES ARE SHOWN ON THE GRADING & DRAINAGE POND SIDE SLOPES ARE SHOWN ON THE POND CROSS–SECTIONS.
- AREAS OF SOIL DISTURBANCE: ALL DEMOLITION IS SHOWN ON THE EXISTING SITE CONDITIONS AND DEMOLITION AND EROSION CONTROL PLAN SHEET. ALL PROPOSED CONSTRUCTION IS SHOWN ON THE REMAINING PLANS. ANY AREAS WHERE DEMOLITION WORK OR PERMANENT FEATURES ARE SHOWN ABOVE OR BELOW GROUND WILL BE DISTURBED.
- AREAS NOT TO BE DISTURBED: ANY AREAS NOT SHOWING DEMOLITION WORK OR PERMANENT FEATURES ARE ASSUMED NOT TO BE DISTURBED. IT WILL BE THE CONTRACTOR'S RESPONSIBILITY TO INDICATE ON THE PLANS ANY OF THESE AREAS THAT DO GET DISTURBED AS WELL AS ANY AREAS USED FOR STAGING AND MATERIALS STORAGE.
- LOCATIONS OF CONTROLS: ALL PROPOSED TEMPORARY CONTROLS AND EXISTING PERMANENT CONTROLS ARE SHOWN ON THE EXISTING SITE, DEMOLITION AND EROSION CONTROL PLAN. ALL PROPOSED PERMANENT CONTROLS ARE SHOWN ON THE REMAINING PLANS. IT WILL BE THE CONTRACTOR'S RESPONSIBILITY TO INDICATE THE LOCATION OF ANY OTHER CONTROLS ON THE PLANS THAT ARE USED DURING CONSTRUCTION.
- PERMANENT STABILIZATION IS SHOWN ON THE PLANS. IT WILL BE THE CONTRACTOR'S RESPONSIBILITY TO INDICATE THE LOCATION ON THE PLANS OF ALL TEMPORARY STABILIZATION PRACTICES USED DURING CONSTRUCTION.
- SURFACE WATERS: N/A
- DISCHARGE POINTS: PERDIDO BAY

2.6 RECEIVING WATERS:

PERDIDO BAY

3.0 CONTROLS:

3.1 EROSION AND SEDIMENT CONTROLS:

ALL EROSION AND SEDIMENT CONTROLS SPECIFIED ON THE DEMOLITION AND EROSION CONTROL PLAN SHEETS, AND THE EROSION CONTROL DETAILS SHALL BE INSTALLED PRIOR TO ANY CONSTRUCTION OR DEMOLITION. SILT FENCING AND STAKED HAY BALES SHALL BE INSTALLED ALONG DOWN–GRADIENT LIMITS.

TEMPORARY SEEDING AND MULCHING SHALL BE APPLIED AFTER 14–DAY INTERVALS OF CEASED DISTURBANCE ACTIVITIES THAT WILL EXCEED 20–DAY PERIODS. GRADED AREAS SHALL BE STABILIZED WITH PERMANENT SEEDING, MULCHING, AND FERTILIZING, OR SODDING WITHIN FIVE DAYS OF FINAL GRADING. LANDSCAPING, INCLUDING SODDING, SHALL BE INSTALLED BY AN EXPERIENCED LANDSCAPE CONTRACTOR. PROPOSED DISTURBED AREAS WILL NOT EXCEED 8 ACRES IN ANY DRAINAGE AREA.

3.2 STORMWATER MANAGEMENT:

PROPOSED STORMWATER MANAGEMENT FACILITIES FOR THIS SITE INCLUDE: TWO WET DETENTION PONDS.

THE PROPOSED STORMWATER MANAGEMENT FACILITIES MEET ALL STORMWATER TREATMENT REQUIREMENTS AND ALL RATE CONTROL REQUIREMENTS SET FORTH BY THE LOCAL AND STATE REGULATORY AGENCIES.

3.3 OTHER CONTROLS:

WASTE DISPOSAL: THE CONTRACTOR IS RESPONSIBLE FOR ALL WASTE DISPOSAL FROM THE SITE. THE CONTRACTOR SHALL EMPLOY WASTE DISPOSAL PRACTICES THAT MEET ALL LOCAL, STATE, AND FEDERAL GUIDELINES AND PREVENT DISCHARGE OF SOLID MATERIALS TO WATERS OF THE UNITED STATES. THE CONTRACTOR IS RESPONSIBLE FOR DOCUMENTING THIS PORTION OF THE SWPPP.

OFFSITE VEHICLE TRACKING: IF OFF SITE TRACKING OF SEDIMENTS BY CONSTRUCTION VEHICLES OCCURS, THE CONTRACTOR IS REQUIRED TO INSTALL A SOIL TRACKING PREVENTION DEVICE (STPD) AS PER FDOT STANDARD INDEX 106 AT ALL EXITS TO THE SITE WHERE SEDIMENT TRACKING IS OCCURRING. THE CONTRACTOR IS ALSO RESPONSIBLE FOR DOCUMENTING THIS PORTION OF THE SWPPP.

HAZARDOUS MATERIALS: ALL POLLUTANTS AND HAZARDOUS MATERIALS INCLUDING BUT NOT LIMITED TO FERTILIZERS, HERBICIDES, PESTICIDES, SOLVENTS, OILS AND OIL FILTERS, PETROLEUM PRODUCTS, PAINT, AND EQUIPMENT MAINTENANCE FLUIDS, SHALL BE STORED INDOORS OR UNDER COVER IN AREAS WITH SECONDARY CONTAINMENT. SECONDARY CONTAINMENT PREVENTS A SPILL FROM SPREADING ACROSS THE SITE AND INCLUDES DIKES, BERMS, CURBING, OR OTHER CONTAINMENT METHODS. HAZARDOUS MATERIAL STORAGE AREAS SHALL BE INSPECTED WEEKLY AND AFTER STORM EVENTS. STORAGE AREAS SHALL BE KEPT CLEAN, WELL ORGANIZED, AND EQUIPPED WITH AMPLE CLEANUP SUPPLIES/SPILL KITS AS APPROPRIATE FOR THE MATERIALS BEING STORED. MATERIAL SAFETY DATA SHEETS, MATERIAL INVENTORY, AND EMERGENCY CONTACT INFORMATION SHALL BE MAINTAINED ON–SITE. ALL PERSONNEL SHALL RECEIVE INSTRUCTION REGARDING PROPER PROCEDURES FOR HAZARDOUS MATERIAL HANDLING AND DISPOSAL. HAZARDOUS MATERIALS SHALL NOT BE DISPOSED OF INTO ON–SITE DUMPSTERS; HAZARDOUS MATERIALS SHALL BE DISPOSED OF IN ACCORDANCE WITH FEDERAL, STATE, AND MUNICIPAL REGULATIONS. VEHICLES AND EQUIPMENT WILL BE MAINTAINED OFF–SITE. ALL VEHICLES AND EQUIPMENT INCLUDING SUBCONTRACTOR VEHICLES WILL BE CHECKED FOR LEAKING OIL AND FLUIDS. VEHICLES LEAKING FLUIDS WILL NOT BE ALLOWED ON–SITE. DRIP PANS SHALL BE PLACED UNDER ALL VEHICLES AND EQUIPMENT THAT ARE PARKED OVERNIGHT.

APPLICATION OF FERTILIZERS, HERBICIDES, AND PESTICIDES: FERTILIZERS, HERBICIDES, AND PESTICIDES SHALL BE DELIVERED TO THE SITE IN ORIGINAL, UNOPENED CONTAINERS BEARING MANUFACTURER'S CHEMICAL ANALYSIS, NAME, TRADE NAME, TRADEMARK, AND INDICATION OF CONFORMANCE TO STATE AND FEDERAL LAWS. FERTILIZERS, HERBICIDES, AND PESTICIDES SHALL BE IN APPLIED IN ACCORDANCE WITH THE MANUFACTURER'S SUGGESTED RATE.

5.0 INSPECTIONS:

QUALIFIED PERSONNEL SHALL INSPECT THE FOLLOWING ITEMS, BUT NOT LIMITED TO, AT LEAST ONCE EVERY SEVEN CALENDAR DAYS AND WITHIN 24 HOURS OF THE END OF A STORM THAT IS 0.25 INCHES OR GREATER. WHERE SITES HAVE BEEN FINALLY STABILIZED, INSPECTIONS SHALL BE CONDUCTED AT LEAST ONCE EVERY MONTH.

- POINTS OF DISCHARGE TO WATERS OF THE UNITED STATES.
- POINTS OF DISCHARGE TO MUNICIPAL SEPARATE STORM SEWER SYSTEMS.
- DISTURBED AREAS OF THE SITE THAT HAVE NOT BEEN FINALLY STABILIZED.
- AREAS USED FOR STORAGE OF MATERIALS THAT ARE EXPOSED TO PRECIPITATION.
- STRUCTURAL CONTROLS.
- STORMWATER MANAGEMENT SYSTEMS.
- LOCATIONS WHERE VEHICLES ENTER OR EXIT THE SITE.

6.0 NON-STORMWATER DISCHARGES:

THE CONTRACTOR SHALL BE RESPONSIBLE FOR REPORTING ANY HAZARDOUS SUBSTANCE SPILLS THAT MAY EQUAL OR EXCEED A REPORTABLE QUANTITY (RQ). REFER TO EPA'S LIST OF HAZARDOUS SUBSTANCES AND REPORTABLE QUANTITIES (EPA 40 CFR 302.4 & 117). V THIS LIST CAN BE OBTAINED FROM EPA'S WEBSITE (WWW.EPA.GO) OR BY CONTACTING EPA. IF AN RQ RELEASE DOES OCCUR THE CONTRACTOR SHALL PERFORM THE FOLLOWING PROCEDURES:

- NOTIFY THE NATIONAL RESPONSE CENTER IMMEDIATELY AT 800–424–8802.
- PROVIDE WRITTEN DESCRIPTION OF THE RELEASE WITHIN 14 DAYS PROVIDING DATES, CAUSE AND PREVENTION METHODS TO THE REGIONAL EPA OFFICE.
- MODIFY THE SWPPP AS NECESSARY TO ADDRESS ADDED PREVENTION METHODS.

7.0 IMPLEMENTATION CHECKLIST:

7.1 RECORDS:

THE CONTRACTOR SHALL MAINTAIN RECORDS OF CONSTRUCTION ACTIVITIES INCLUDING, BUT NOT LIMITED TO:

- DATES WHEN MAJOR GRADING ACTIVITIES OCCUR.
- DATES WHEN CONSTRUCTION ACTIVITIES TEMPORARILY CEASE ON A PORTION OF THE SITE.
- DATES WHEN CONSTRUCTION ACTIVITIES PERMANENTLY CEASE ON A PORTION OF THE SITE.
- DATES WHEN STABILIZATION MEASURES ARE INITIATED ON THE SITE.

7.2 INSPECTION REPORTS:

THE CONTRACTOR SHALL PREPARE INSPECTION REPORTS SUMMARIZING THE FOLLOWING, BUT NOT LIMITED TO:

- NAME OF INSPECTOR.
- QUALIFICATIONS OF INSPECTOR.
- MEASURES/AREAS INSPECTED.
- OBSERVED CONDITIONS.
- CHANGES NECESSARY TO THE SWPPP.

7.3 RELEASES OF REPORTABLE QUANTITIES OF OIL OR HAZARDOUS MATERIALS:

THE CONTRACTOR SHALL REPORT ANY RELEASES OF REPORTABLE QUANTITIES OF OIL OR HAZARDOUS MATERIALS IF THEY OCCUR AS PER THE MEASURES OUTLINED IN SECTION 6.0 OF THE SWPPP.

7.4 SWPPP MODIFICATION:

THE CONTRACTOR SHALL MODIFY THE SWPPP AS NECESSARY TO:

- COMPLY WITH MINIMUM PERMIT REQUIREMENTS WHEN NOTIFIED BY FDEP THAT THE PLAN DOES NOT COMPLY.
- ADDRESS ANY CHANGES IN DESIGN, CONSTRUCTION OPERATIONS OR MAINTENANCE, WHICH HAS AN EFFECT ON THE POTENTIAL FOR DISCHARGE OF POLLUTANTS.
- PREVENT REOCCURRENCE OF REPORTABLE QUANTITY RELEASES OF HAZARDOUS MATERIAL OR OIL.

8.0 TERMINATION CHECKLIST:

THE FOLLOWING ITEMS SHALL BE COMPLETE BEFORE SUBMITTING THE NOT:

- ALL SOIL DISTURBING ACTIVITIES ARE COMPLETE.
- TEMPORARY EROSION AND SEDIMENT CONTROL MEASURES HAVE BEEN REMOVED OR WILL BE REMOVED AT AN APPROPRIATE TIME.
- ALL AREAS OF THE CONSTRUCTION SITE NOT OTHERWISE COVERED BY PERMANENT PAVEMENT OR STRUCTURE HAVE BEEN STABILIZED WITH UNIFORM PERENNIAL VEGETATIVE COVER WITH A DENSITY OF 70% OR EQUIVALENT MEASURES HAVE BEEN EMPLOYED.

RBA
REBOL-BATTLE & ASSOCIATES
Civil Engineers and Surveyors
2301 N. Ninth Avenue, Suite 300
Pensacola, Florida 32503
Telephone 850.438.0400 Fax 850.438.0448
EB 00009657 LB7916

NPDES - STORMWATER POLLUTION PREVENTION PLAN

BROOKHAVEN PHASE 4
A 193 LOT SUBDIVISION
PENSACOLA, FLORIDA

No.	DATE	REVISION

SEAL
NOT FOR CONSTRUCTION
PAUL A. BATTLE LICENSE No. 53126 STATE OF FLORIDA PROFESSIONAL ENGINEER
6/15/22
PAUL A. BATTLE, P.E.
No.53126

Dr. By:
Ck By: PAB
Job No.: 2015.035 F
Date: 6/1/2022

DRAWING No.
C1.3
SHEET 4

This drawing is the property of Rebol-Battle & Associates, and may not be reproduced without written permission.

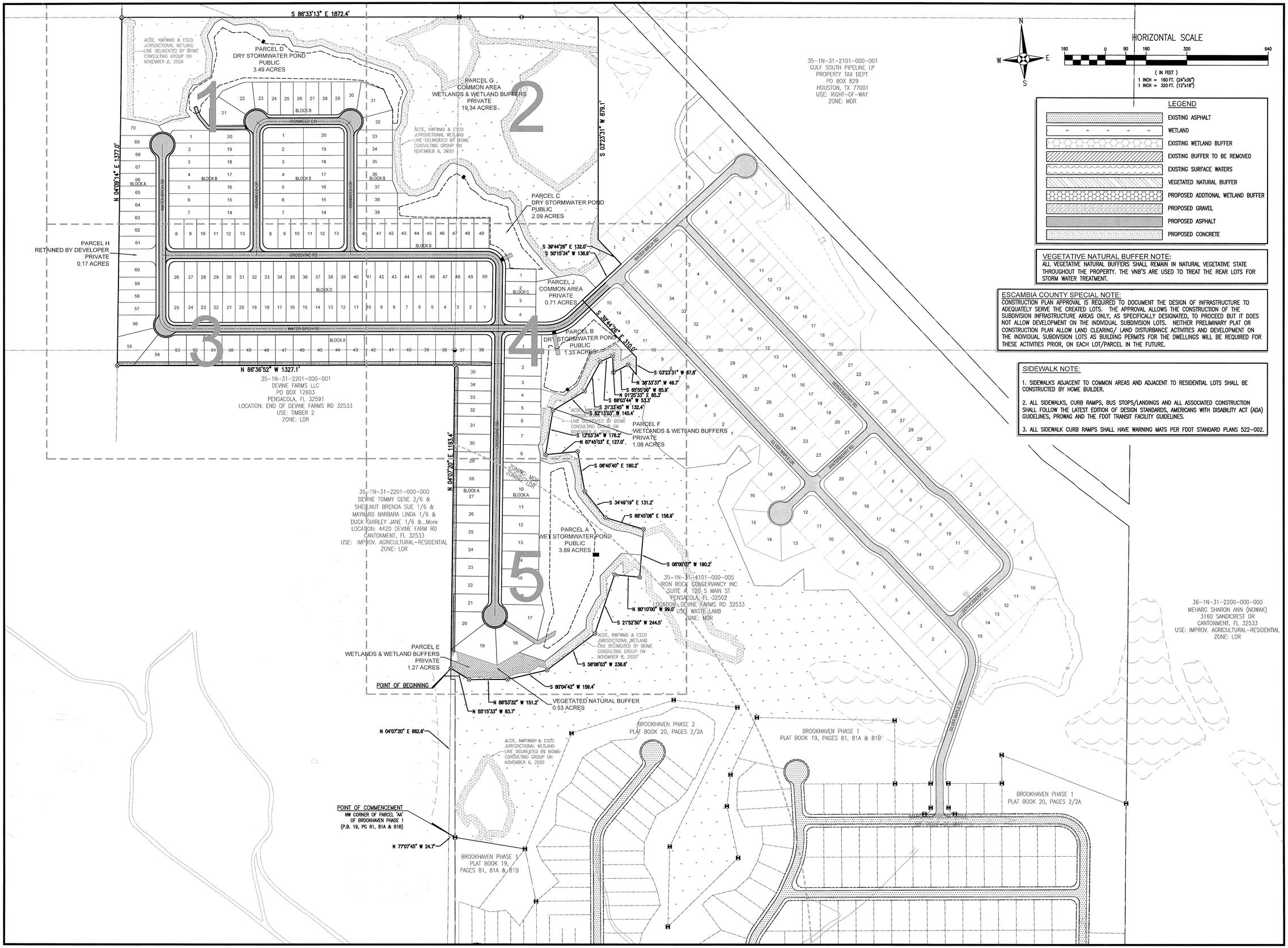

LEGEND

- EXISTING ASPHALT
- WETLAND
- EXISTING WETLAND BUFFER
- EXISTING BUFFER TO BE REMOVED
- EXISTING SURFACE WATERS
- VEGETATED NATURAL BUFFER
- PROPOSED ADDTIONAL WETLAND BUFFER
- PROPOSED GRAVEL
- PROPOSED ASPHALT
- PROPOSED CONCRETE

VEGETATIVE NATURAL BUFFER NOTE:
ALL VEGETATIVE NATURAL BUFFERS SHALL REMAIN IN NATURAL VEGETATIVE STATE THROUGHOUT THE PROPERTY. THE VNB'S ARE USED TO TREAT THE REAR LOTS FOR STORM WATER TREATMENT.

ESCAMBIA COUNTY SPECIAL NOTE:
CONSTRUCTION PLAN APPROVAL IS REQUIRED TO DOCUMENT THE DESIGN OF INFRASTRUCTURE TO ADEQUATELY SERVE THE CREATED LOTS. THE APPROVAL ALLOWS THE CONSTRUCTION OF THE SUBDIVISION INFRASTRUCTURE AREAS ONLY, AS SPECIFICALLY DESIGNATED, TO PROCEED BUT IT DOES NOT ALLOW DEVELOPMENT ON THE INDIVIDUAL SUBDIVISION LOTS. NEITHER PRELIMINARY PLAT OR CONSTRUCTION PLAN ALLOW LAND CLEARING/ LAND DISTURBANCE ACTIVITIES AND DEVELOPMENT ON THE INDIVIDUAL SUBDIVISION LOTS AS BUILDING PERMITS FOR THE DWELLINGS WILL BE REQUIRED FOR THESE ACTIVITIES PRIOR, ON EACH LOT/PARCEL IN THE FUTURE.

SIDEWALK NOTE:

1. SIDEWALKS ADJACENT TO COMMON AREAS AND ADJACENT TO RESIDENTIAL LOTS SHALL BE CONSTRUCTED BY HOME BUILDER.
2. ALL SIDEWALKS, CURB RAMPS, BUS STOPS/LANDINGS AND ALL ASSOCIATED CONSTRUCTION SHALL FOLLOW THE LATEST EDITION OF DESIGN STANDARDS, AMERICANS WITH DISABILITY ACT (ADA) GUIDELINES, PROWAG AND THE FDOT TRANSIT FACILITY GUIDELINES.
3. ALL SIDEWALK CURB RAMPS SHALL HAVE WARNING MATS PER FDOT STANDARD PLANS 522-002.

REBOL-BATTLE & ASSOCIATES
Civil Engineers and Surveyors
2301 N. Ninth Avenue, Suite 300
Pensacola, Florida 32503
Telephone: 850.438.0446 Fax: 850.438.0448
EB 0000657 LB7916

BROOKHAVEN PHASE 4

A 193 LOT SUBDIVISION
PENSACOLA, FLORIDA

SITE LAYOUT & DIMENSION PLAN

No.	DATE	REVISION

SEAL
NOT FOR CONSTRUCTION
PAUL A. BATTLE LICENSE No. 53126 STATE OF FLORIDA PROFESSIONAL ENGINEER
6/15/22
PAUL A. BATTLE, P.E.
No 53126

Dr. By:
Ck By: PAB
Job No.: 2015.035 F
Date: 6/1/2022

DRAWING No.
C2.0

This drawing is the property of Rebol-Battle & Associates, and may not be reproduced without written permission.

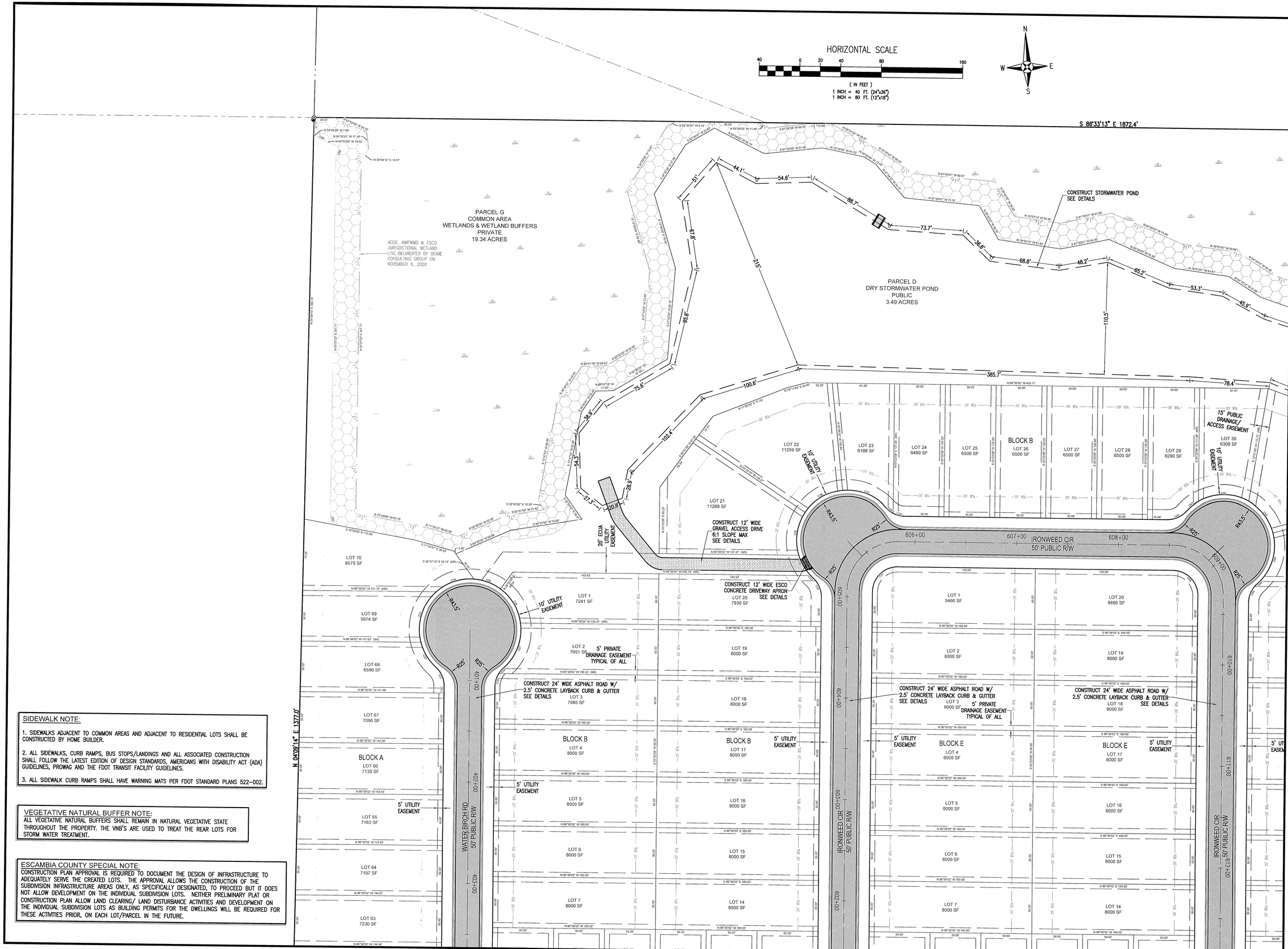
HORIZONTAL SCALE
40 0 20 40 80 160
(IN FEET)
1 INCH = 40 FT. (24"x36")
1 INCH = 80 FT. (12"x18")
N
W E
S
S 86°33'13" E 1872.4'
PARCEL G
COMMON AREA
WETLANDS & WETLAND BUFFERS
PRIVATE
19.34 ACRES
ACOE, NWFWMD & ESCO JURISDICTIONAL WETLAND LINE DELINEATED BY BIOME CONSULTING GROUP ON NOVEMBER 6, 2020
PARCEL D
DRY STORMWATER POND
PUBLIC
3.49 ACRES
CONSTRUCT STORMWATER POND SEE DETAILS
CONSTRUCT 12' WIDE GRAVEL ACCESS DRIVE 6:1 SLOPE MAX SEE DETAILS
CONSTRUCT 12' WIDE ESCO CONCRETE DRIVEWAY APRON SEE DETAILS
CONSTRUCT 24' WIDE ASPHALT ROAD W/ 2.5' CONCRETE LAYBACK CURB & GUTTER SEE DETAILS
5' PRIVATE DRAINAGE EASEMENT TYPICAL OF ALL
10' UTILITY EASEMENT
20' ECUA UTILITY EASEMENT
5' UTILITY EASEMENT
15' PUBLIC DRAINAGE/ ACCESS EASEMENT
WATER BIRCH RD
50' PUBLIC R/W
IRONWEED CIR
50' PUBLIC R/W
IRONWEED CIR
50' PUBLIC R/W
BLOCK A
BLOCK B
BLOCK E
LOT 1 7241 SF
LOT 2 7051 SF
LOT 3 7985 SF
LOT 4 8000 SF
LOT 5 8000 SF
LOT 6 8000 SF
LOT 7 8000 SF
LOT 14 8000 SF
LOT 15 8000 SF
LOT 16 8000 SF
LOT 17 8000 SF
LOT 18 8000 SF
LOT 19 8000 SF
LOT 20 7930 SF
LOT 21 11268 SF
LOT 22 11259 SF
LOT 23 6188 SF
LOT 24 6490 SF
LOT 25 6500 SF
LOT 26 6500 SF
LOT 27 6500 SF
LOT 28 6500 SF
LOT 29 6290 SF
LOT 30 6309 SF
LOT 63 7230 SF
LOT 64 7197 SF
LOT 65 7163 SF
LOT 66 7130 SF
LOT 67 7096 SF
LOT 68 6590 SF
LOT 69 5974 SF
LOT 70 8579 SF
LOT 1 9466 SF
LOT 2 8000 SF
LOT 19 8000 SF
LOT 18 8000 SF
LOT 3 8000 SF
LOT 4 8000 SF
LOT 17 8000 SF
LOT 5 8000 SF
LOT 16 8000 SF
LOT 6 8000 SF
LOT 15 8000 SF
LOT 7 8000 SF
LOT 14 8000 SF
LOT 20 9466 SF
IRONWEED CIR
50' PUBLIC R/W
606+00
607+00
608+00
609+00
610+00
611+00
612+00
613+00
614+00
615+00
616+00
617+00
618+00
619+00
620+00
621+00
622+00
623+00
624+00
625+00
626+00
627+00
628+00
629+00
630+00
631+00
632+00
633+00
634+00
635+00
636+00
637+00
638+00
639+00
640+00
641+00
642+00
643+00
644+00
645+00

ESCAMBIA COUNTY SPECIAL NOTE:
CONSTRUCTION PLAN APPROVAL IS REQUIRED TO DOCUMENT THE DESIGN OF INFRASTRUCTURE TO ADEQUATELY SERVE THE CREATED LOTS. THE APPROVAL ALLOWS THE CONSTRUCTION OF THE SUBDIVISION INFRASTRUCTURE AREAS ONLY, AS SPECIFICALLY DESIGNATED, TO PROCEED BUT IT DOES NOT ALLOW DEVELOPMENT ON THE INDIVIDUAL SUBDIVISION LOTS. NEITHER PRELIMINARY PLAT OR CONSTRUCTION PLAN ALLOW LAND CLEARING/ LAND DISTURBANCE ACTIVITIES AND DEVELOPMENT ON THE INDIVIDUAL SUBDIVISION LOTS AS BUILDING PERMITS FOR THE DWELLINGS WILL BE REQUIRED FOR THESE ACTIVITIES PRIOR, ON EACH LOT/PARCEL IN THE FUTURE.

VEGETATIVE NATURAL BUFFER NOTE:
ALL VEGETATIVE NATURAL BUFFERS SHALL REMAIN IN NATURAL VEGETATIVE STATE THROUGHOUT THE PROPERTY. THE VNB'S ARE USED TO TREAT THE REAR LOTS FOR STORM WATER TREATMENT.

SIDEWALK NOTE:

1. SIDEWALKS ADJACENT TO COMMON AREAS AND ADJACENT TO RESIDENTIAL LOTS SHALL BE CONSTRUCTED BY HOME BUILDER.

2. ALL SIDEWALKS, CURB RAMPS, BUS STOPS/LANDINGS AND ALL ASSOCIATED CONSTRUCTION SHALL FOLLOW THE LATEST EDITION OF DESIGN STANDARDS, AMERICANS WITH DISABILITY ACT (ADA) GUIDELINES, PROWAG AND THE FDOT TRANSIT FACILITY GUIDELINES.

3. ALL SIDEWALK CURB RAMPS SHALL HAVE WARNING MATS PER FDOT STANDARD PLANS 522-002.

HORIZONTAL SCALE
40 0 20 40 80 160
(IN FEET)
1 INCH = 40 FT. (24"x36")
1 INCH = 80 FT. (12"x18")

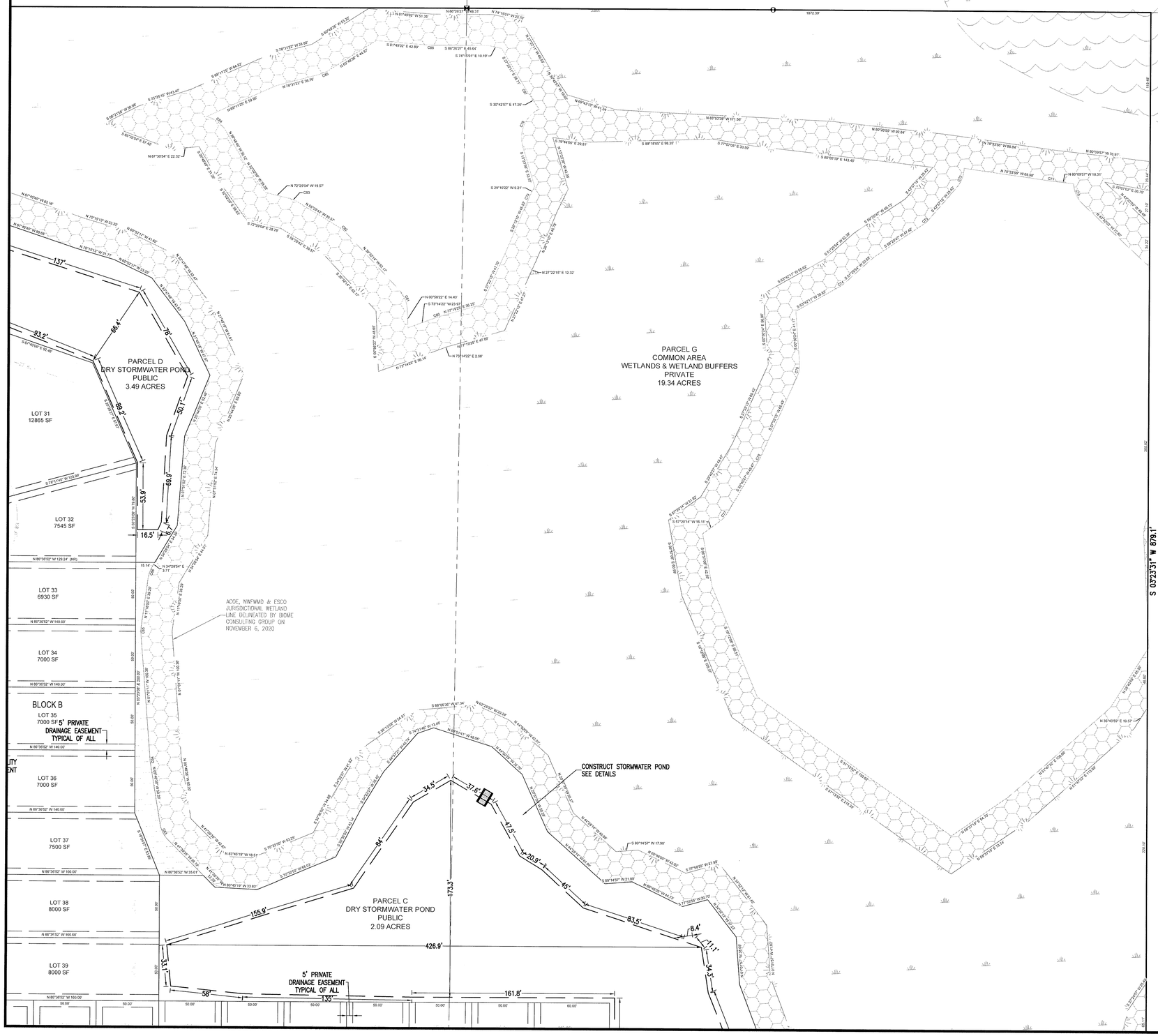

RBA
REBOL-BATTLE & ASSOCIATES
Civil Engineers and Surveyors
2301 N. Ninth Avenue, Suite 300
Pensacola, Florida 32503
Telephone 850.438.0400 Fax 850.438.0448
EB 00009657 LB7916

SITE LAYOUT & DIMENSION PLAN

BROOKHAVEN PHASE 4
A 193 LOT SUBDIVISION
PENSACOLA, FLORIDA

No.	DATE	REVISION

SEAL
NOT FOR CONSTRUCTION
PAUL A. BATTLE, P.E.
LICENSE No. 53126
6/15/22
STATE OF FLORIDA
PAUL A. BATTLE, P.E.
No. 53126

Dr. By:
Ck By: PAB
Job No.: 2015.035 F
Date: 6/1/2022

DRAWING No.
C2.2

This drawing is the property of Rebol-Battle & Associates, and may not be reproduced without written permission.



SIDEWALK NOTE:

1. SIDEWALKS ADJACENT TO COMMON AREAS AND ADJACENT TO RESIDENTIAL LOTS SHALL BE CONSTRUCTED BY HOME BUILDER.

2. ALL SIDEWALKS, CURB RAMPS, BUS STOPS/LANDINGS AND ALL ASSOCIATED CONSTRUCTION SHALL FOLLOW THE LATEST EDITION OF DESIGN STANDARDS, AMERICANS WITH DISABILITY ACT (ADA) GUIDELINES, PROWAG AND THE FDOT TRANSIT FACILITY GUIDELINES.

3. ALL SIDEWALK CURB RAMPS SHALL HAVE WARNING MATS PER FDOT STANDARD PLANS 522-002.

VEGETATIVE NATURAL BUFFER NOTE:

ALL VEGETATIVE NATURAL BUFFERS SHALL REMAIN IN NATURAL VEGETATIVE STATE THROUGHOUT THE PROPERTY. THE VNB'S ARE USED TO TREAT THE REAR LOTS FOR STORM WATER TREATMENT.

ESCAMBIA COUNTY SPECIAL NOTE:

CONSTRUCTION PLAN APPROVAL IS REQUIRED TO DOCUMENT THE DESIGN OF INFRASTRUCTURE TO ADEQUATELY SERVE THE CREATED LOTS. THE APPROVAL ALLOWS THE CONSTRUCTION OF THE SUBDIVISION INFRASTRUCTURE AREAS ONLY, AS SPECIFICALLY DESIGNATED, TO PROCEED BUT IT DOES NOT ALLOW DEVELOPMENT ON THE INDIVIDUAL SUBDIVISION LOTS. NEITHER PRELIMINARY PLAT OR CONSTRUCTION PLAN ALLOW LAND CLEARING/ LAND DISTURBANCE ACTIVITIES AND DEVELOPMENT ON THE INDIVIDUAL SUBDIVISION LOTS AS BUILDING PERMITS FOR THE DWELLINGS WILL BE REQUIRED FOR THESE ACTIVITIES PRIOR, ON EACH LOT/PARCEL IN THE FUTURE.

REBOL-BATTLE & ASSOCIATES
Civil Engineers and Surveyors
2301 N. Ninth Avenue, Suite 300
Pensacola, Florida 32503
Telephone: 850.438.9041 FAX: 850.438.0448
EB 00003667 LB7916

BROOKHAVEN PHASE 4

A 193 LOT SUBDIVISION
PENSACOLA, FLORIDA

SITE LAYOUT & DIMENSION PLAN

No.	DATE	REVISION

SEAL
NOT FOR CONSTRUCTION
PAUL A. BATTLE, P.E.
No. 68126
STATE OF FLORIDA

Dr. By:
Ck By: PAB
Job No.: 2015.035 F
Date: 6/1/2022

DRAWING No.
C2.3

This drawing is the property of Rebol-Battle & Associates, and may not be reproduced without written permission.

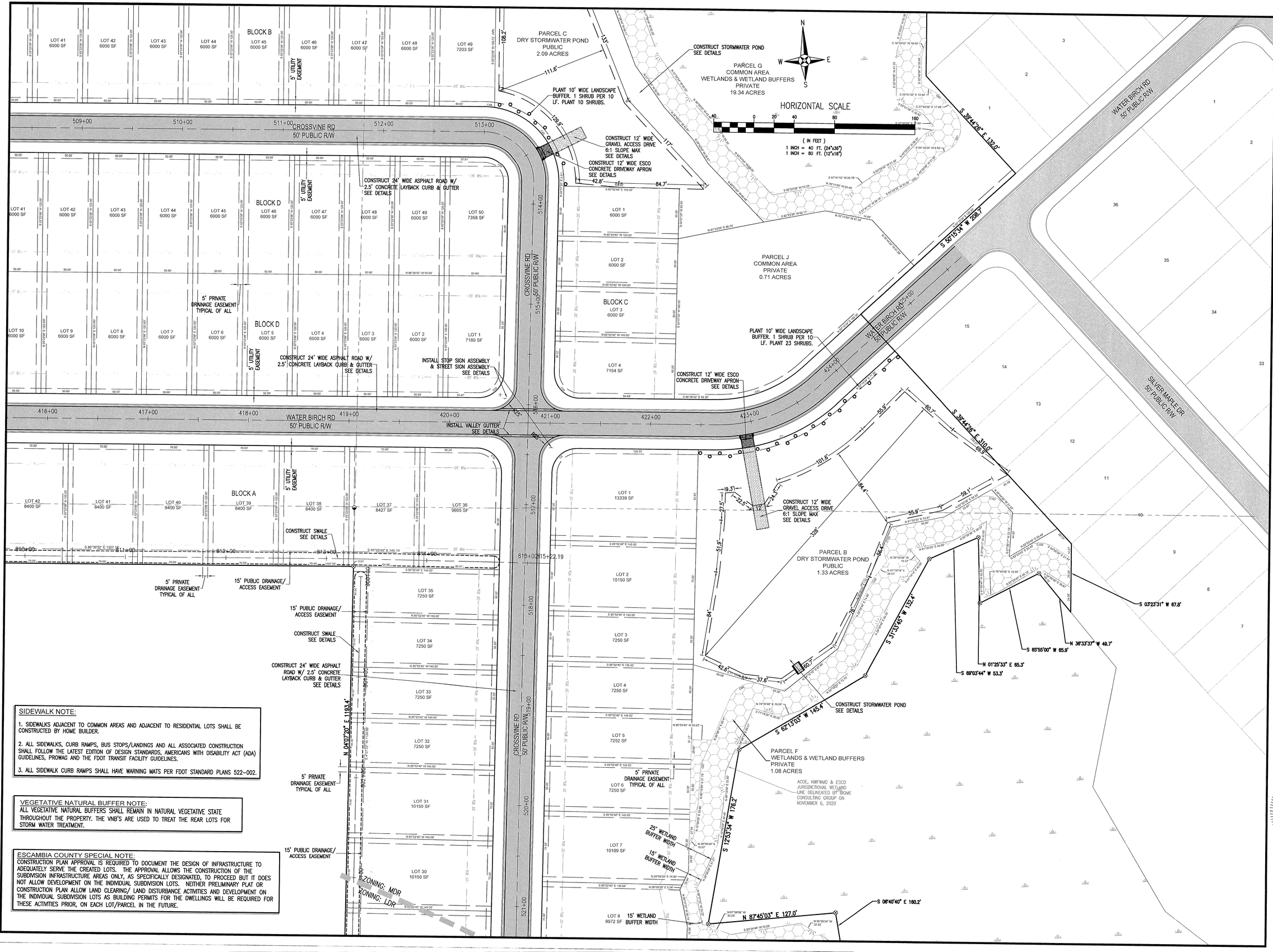
PARCEL C
DRY STORMWATER POND
PUBLIC
2.09 ACRES
PARCEL G
COMMON AREA
WETLANDS & WETLAND BUFFERS
PRIVATE
19.34 ACRES
PARCEL J
COMMON AREA
PRIVATE
0.71 ACRES
PARCEL B
DRY STORMWATER POND
PUBLIC
1.33 ACRES
PARCEL F
WETLANDS & WETLAND BUFFERS
PRIVATE
1.08 ACRES
CONSTRUCT STORMWATER POND
SEE DETAILS
PLANT 10' WIDE LANDSCAPE BUFFER. 1 SHRUB PER 10 LF. PLANT 10 SHRUBS.
PLANT 10' WIDE LANDSCAPE BUFFER. 1 SHRUB PER 10 LF. PLANT 23 SHRUBS.
CONSTRUCT 12' WIDE GRAVEL ACCESS DRIVE 6:1 SLOPE MAX SEE DETAILS
CONSTRUCT 12' WIDE ESCO CONCRETE DRIVEWAY APRON SEE DETAILS
CONSTRUCT 24' WIDE ASPHALT ROAD W/ 2.5' CONCRETE LAYBACK CURB & GUTTER SEE DETAILS
INSTALL STOP SIGN ASSEMBLY & STREET SIGN ASSEMBLY SEE DETAILS
INSTALL VALLEY GUTTER SEE DETAILS
CONSTRUCT SWALE SEE DETAILS
5' PRIVATE DRAINAGE EASEMENT TYPICAL OF ALL
15' PUBLIC DRAINAGE/ ACCESS EASEMENT
5' UTILITY EASEMENT
CROSSVINE RD 50' PUBLIC R/W
WATER BIRCH RD 50' PUBLIC R/W
SILVER MAPLE DR 50' PUBLIC R/W
BLOCK A
BLOCK B
BLOCK C
BLOCK D
HORIZONTAL SCALE
(IN FEET)
1 INCH = 40 FT. (24"x36")
1 INCH = 80 FT. (12"x18")
S 39°44'26" E 1320.0'
S 50°15'34" W 208.7'
S 39°44'26" E 310.0'
S 37°33'45" W 132.4'
S 62°13'03" W 145.4'
S 12°33'34" W 176.2'
N 87°45'03" E 127.0'
S 06°40'40" E 180.2'
S 03°23'31" W 67.8'
N 36°33'37" W 49.7'
S 65°55'00" W 65.9'
N 01°25'33" E 65.3'
S 69°03'44" W 53.3'
N 04°07'20" E 1193.4'
S 85°52'40" E 1322.19'
S 85°52'40" E 1327.19'
S 85°52'40" E 1338.54'
S 85°52'40" E 145.00'
N 85°52'40" W 145.00'
S 85°52'40" E 120.00'
N 85°52'40" W 120.00'
N 86°36'52" W 55.00'
S 86°36'52" E 42.30'
S 86°36'52" E 1327.19'
S 86°36'52" E 1322.19'
S 86°36'52" E 1338.54'
N 86°36'52" W 1338.54'
S 86°36'52" E 1338.54'
S 86°36'52" E 1322.19'
S 86°36'52" E 1327.19

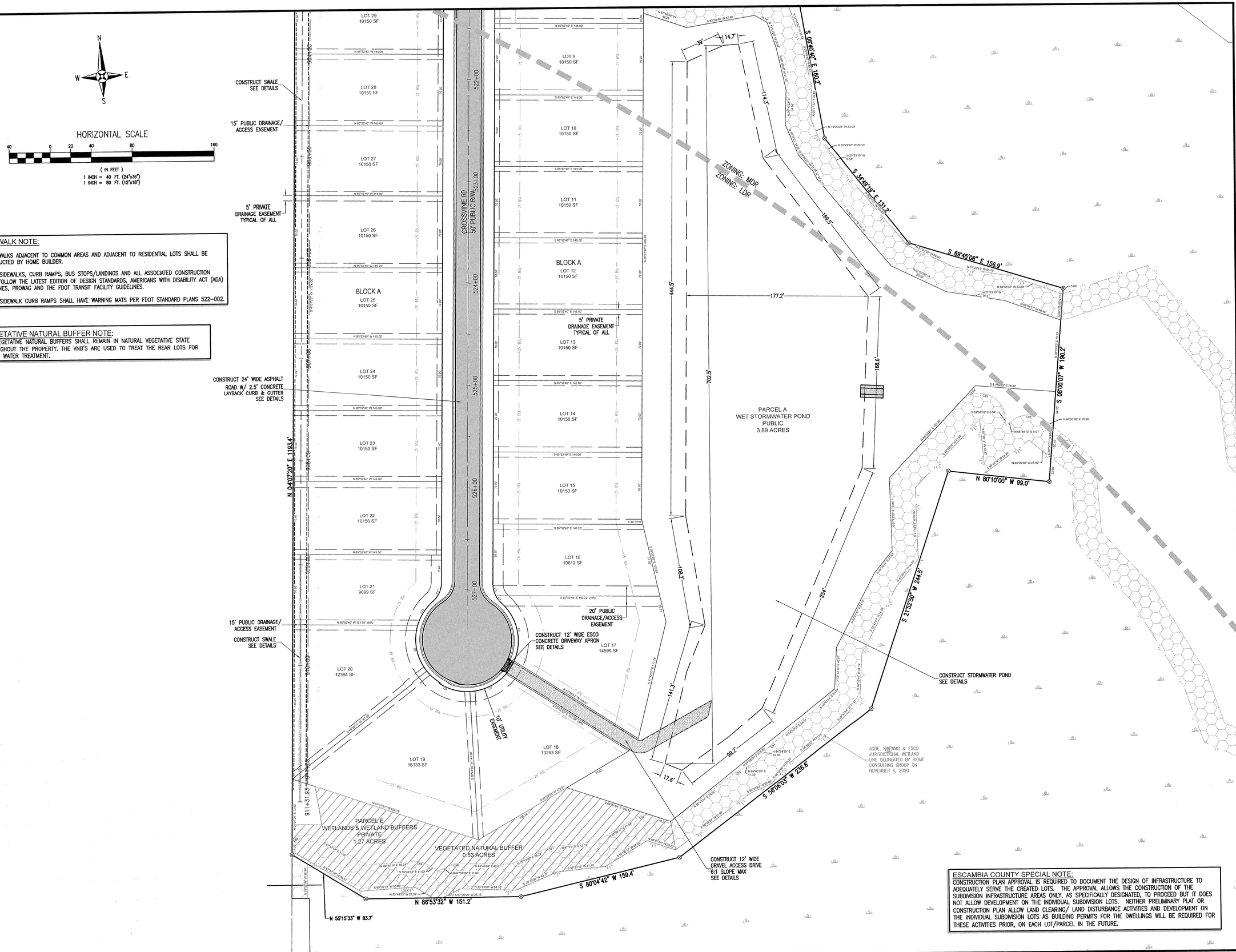

RBA
REBOL-BATTLE & ASSOCIATES
Civil Engineers and Surveyors
2301 N. Ninth Avenue, Suite 300
Pensacola, Florida 32503
Telephone 850.438.0400 Fax 850.438.0448
EB 0000865? LB7816

SITE LAYOUT & DIMENSION PLAN

BROOKHAVEN PHASE 4
A 193 LOT SUBDIVISION
PENSACOLA, FLORIDA

No.	DATE	REVISION

SEAL
NOT FOR CONSTRUCTION
PAUL A. BATTLE
No. 53126
6/15/22
STATE OF FLORIDA
PAUL A. BATTLE, P.E.
No.53126

Dr. By:
Ck By: PAB
Job No.: 2015.035 F
Date: 6/1/2022

DRAWING No.
C2.5

This drawing is the property of Rebol-Battle & Associates, and may not be reproduced without written permission.

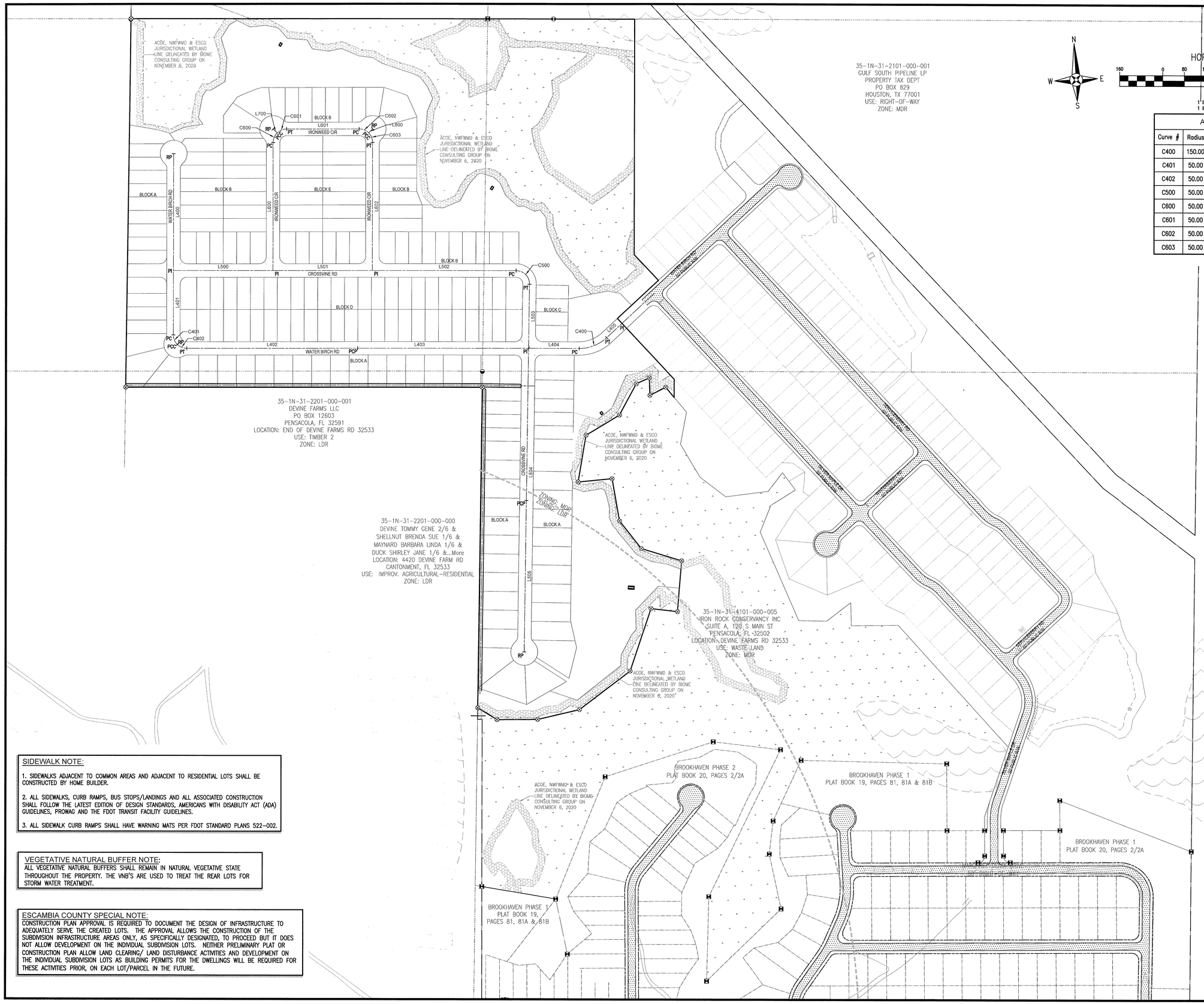

ALIGNMENT CURVE TABLE					
Curve #	Radius	Length	Chord Direction	Chord	Delta
C400	150.00	112.90	N 71°49'21" E	110.26	43°07'34"
C401	50.00	39.27	S 19°06'52" E	38.27	45°00'00"
C402	50.00	39.27	S 64°06'52" E	38.27	45°00'00"
C500	50.00	79.18	S 41°14'46" E	71.16	90°44'12"
C600	50.00	39.27	N 25°53'08" E	38.27	45°00'00"
C601	50.00	39.27	N 70°53'08" E	38.27	45°00'00"
C602	50.00	39.27	S 64°06'52" E	38.27	45°00'00"
C603	50.00	39.27	S 19°06'52" E	38.27	45°00'00"

ALIGNMENT LINE TABLE		
Line #	Length	Direction
L400	437.87	S 3°23'08" W
L401	240.00	S 3°23'08" W
L402	635.76	S 86°36'52" E
L403	635.76	S 86°36'52" E
L404	187.63	S 86°36'52" E
L405	77.56	N 50°15'34" E
L500	370.00	S 86°36'52" E
L501	370.00	S 86°36'52" E
L502	534.60	S 86°36'52" E
L503	239.38	S 4°07'20" W
L504	565.52	S 4°07'20" W
L505	565.52	S 4°07'20" W
L600	480.00	N 3°23'08" E
L601	270.00	S 86°36'52" E
L602	480.00	S 3°23'08" W
L700	20.70	S 41°43'06" E
L800	20.67	S 48°29'23" W

SIDEWALK NOTE:

1. SIDEWALKS ADJACENT TO COMMON AREAS AND ADJACENT TO RESIDENTIAL LOTS SHALL BE CONSTRUCTED BY HOME BUILDER.

2. ALL SIDEWALKS, CURB RAMPS, BUS STOPS/LANDINGS AND ALL ASSOCIATED CONSTRUCTION SHALL FOLLOW THE LATEST EDITION OF DESIGN STANDARDS, AMERICANS WITH DISABILITY ACT (ADA) GUIDELINES, PROWAG AND THE FDOT TRANSIT FACILITY GUIDELINES.

3. ALL SIDEWALK CURB RAMPS SHALL HAVE WARNING MATS PER FDOT STANDARD PLANS 522-002.

VEGETATIVE NATURAL BUFFER NOTE:

ALL VEGETATIVE NATURAL BUFFERS SHALL REMAIN IN NATURAL VEGETATIVE STATE THROUGHOUT THE PROPERTY. THE VNB'S ARE USED TO TREAT THE REAR LOTS FOR STORM WATER TREATMENT.

ESCAMBIA COUNTY SPECIAL NOTE:

CONSTRUCTION PLAN APPROVAL IS REQUIRED TO DOCUMENT THE DESIGN OF INFRASTRUCTURE TO ADEQUATELY SERVE THE CREATED LOTS. THE APPROVAL ALLOWS THE CONSTRUCTION OF THE SUBDIVISION INFRASTRUCTURE AREAS ONLY, AS SPECIFICALLY DESIGNATED, TO PROCEED BUT IT DOES NOT ALLOW DEVELOPMENT ON THE INDIVIDUAL SUBDIVISION LOTS. NEITHER PRELIMINARY PLAT OR CONSTRUCTION PLAN ALLOW LAND CLEARING/ LAND DISTURBANCE ACTIVITIES AND DEVELOPMENT ON THE INDIVIDUAL SUBDIVISION LOTS AS BUILDING PERMITS FOR THE DWELLINGS WILL BE REQUIRED FOR THESE ACTIVITIES PRIOR, ON EACH LOT/PARCEL IN THE FUTURE.

REBOL-BATTLE & ASSOCIATES
Civil Engineers and Surveyors
2301 N. Ninth Avenue, Suite 300
Pensacola, Florida 32503
Telephone 850.438.0400 Fax 850.438.0448
EB 0000650 LB 0748

SITE LAYOUT & DIMENSION PLAN

BROOKHAVEN PHASE 4

A 193 LOT SUBDIVISION
PENSACOLA, FLORIDA

No.	DATE	REVISION

SEAL
NOT FOR CONSTRUCTION
PAUL A. BATTLE
LICENSED
No. 53126
6/15/22
STATE OF
FLORIDA
PAUL A. BATTLE, P.E.
No. 53126

Dr. By:
Ck By: PAB
Job No.: 2015.035 F
Date: 6/1/2022

DRAWING No.
C2.6

This drawing is the property of Rebol-Battle & Associates, and may not be reproduced without written permission.

NOTE:
WALK SLOPE VARIES, SEE PLAN

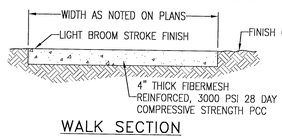

WALK SECTION

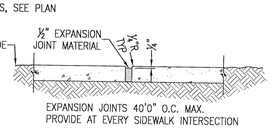

EXPANSION JOINTS 40'0" O.C. MAX.
PROVIDE AT EVERY SIDEWALK INTERSECTION

EXPANSION JOINT

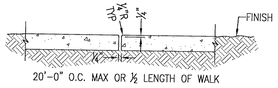

CONSTRUCTION JOINT

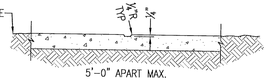

DUMMY GROOVE

SIDEWALK DETAILS
N.T.S.

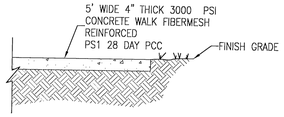

SIDEWALK DETAIL
N.T.S.

SIDEWALK NOTE:

1. SIDEWALKS ADJACENT TO COMMON AREAS AND ADJACENT TO RESIDENTIAL LOTS SHALL BE CONSTRUCTED BY HOME BUILDER.
2. ALL SIDEWALKS, CURB RAMPS, BUS STOPS/LANDINGS AND ALL ASSOCIATED CONSTRUCTION SHALL FOLLOW THE LATEST EDITION OF DESIGN STANDARDS, AMERICANS WITH DISABILITY ACT (ADA) GUIDELINES, PROWAG AND THE FDOT TRANSIT FACILITY GUIDELINES.
3. ALL SIDEWALK CURB RAMPS SHALL HAVE WARNING MATS PER FDOT STANDARD PLANS 522-002.



FDOT STANDARD
R1-1
2'-0" x 2'-0"
N.T.S.

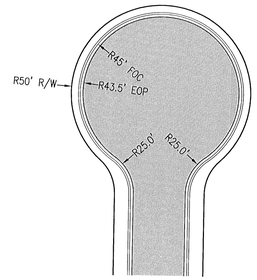

TYPICAL ESCAMBIA COUNTY
CUL-DE-SAC DETAIL
N.T.S.

GENERAL NOTES

1. ALL SIGN INSTALLATIONS MUST COMPLY WITH THE LATEST *MANUAL ON UNIFORM TRAFFIC CONTROL DEVICES (M.U.T.C.D.)* SPECIFICATIONS.
2. ALL PAVEMENT MARKINGS MUST BE THERMOPLASTIC AND COMPLY WITH SECTION 711 OF F.D.O.T.'s *STANDARD SPECIFICATIONS FOR ROAD AND BRIDGE CONSTRUCTION*.
3. STOP BAR APPLICATION IS NOT REQUIRED AT THE INTERSECTION OF TWO RESIDENTIAL ROADWAYS AND / OR ROADWAYS LOCATED WITHIN INTERIORS OF A SUBDIVISION UNLESS SPECIFICALLY NOTED OTHERWISE.

① STOP SIGN

SIGN PLACEMENT: LOCATE SIGN ADJACENT TO POINT OF CURVATURE (p.c.) OF CURBING OR EDGE OF ASPHALT TURN OUT.
LATERAL CLEARANCE (W / CURB): NO PART OF SIGN ASSEMBLY SHALL BE LESS THAN 1 FOOT FROM BACK OF CURB (EXCLUDES RIBBON CURB).
LATERAL CLEARANCE WITHOUT CURB: NO PART OF SIGN ASSEMBLY SHALL BE LESS THAN 6' FROM EDGE OF ASPHALT (INCLUDES RIBBON CURB).
VERTICAL CLEARANCE: SIGN SHALL DISPLAY A MINIMUM VERTICAL CLEARANCE OF 7 FEET (MEASURED FROM BOTTOM OF SIGN BLADE TO LEVEL OF ADJACENT ROADWAY).

② STREET NAME SIGN

SIGN PLACEMENT: LOCATE STREET NAME SIGN AT MID-RADIUS POINT OF TURN OUT ON SAME SIDE OF STREET AS STOP SIGN.
NOTE: *SEE ESCAMBIA COUNTY STANDARD DETAILS FOR STREET NAME SIGNS* FOR FURTHER FABRICATION, LOCATION AND INSTALLATION REQUIREMENTS.

③ 24"STOP BAR

OPTIONAL (SEE GEN. NOTE # 3).

PLACEMENT: LEADING EDGE OF STOP BAR CANNOT BE LESS THAN 4 FEET IN ADVANCE OF INTERSECTING EDGE OF TRAVELED WAY OR MARKED / UNMARKED CROSSWALK. STOP BAR MUST BE LOCATED AS TO PROVIDE ADEQUATE INTERSECTION SIGHT DISTANCE PER F.D.O.T.'s *DESIGN STANDARDS INDEX # 546*.

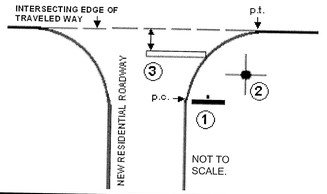

INSTALLATION DETAILS
TRAFFIC CONTROL SIGNS & MARKINGS FOR NEW RESIDENTIAL INTERSECTIONS
ACCEPTABLE PER CURRENT ESCAMBIA COUNTY INSPECTION PRACTICES

NOTES:
TYPICAL DRIVEWAY CONNECTION STANDARDS
FOR EXISTING ROADWAY CONDITIONS

1) ALL MATERIALS AND LABOR FOR INSTALLATION WILL BE THE RESPONSIBILITY OF THE PROPERTY OWNER/CONTRACTOR.
2) DRIVEWAYS ABUTTING PAVED ROADS SHALL BE 1 – ¾" ASPHALT WITH 6" STABILIZED SUB GRADE OR 4" TO 6" CONCRETE WITH 4" STABILIZED SUB GRADE – 95% COMPACTION (MODIFIED PROCTOR) WITH LBR 40 BETWEEN EDGE OF ROADWAY AND R/W LINE. COMPACTION AND TESTING IF NECESSARY, THIS WILL BE THE RESPONSIBILITY OF THE OWNER/CONTRACTOR.
3) DRIVEWAYS ABUTTING A DIRT ROAD SHALL BE MILLED ASPHALT, GRADED AGGREGATE BASE, OR WASHED CONCRETE (4" IN DEPTH) ON THE COUNTY MAINTAINED PORTION OF DRIVEWAY.
4) IF NECESSARY, REFER TO FDOT INDEX DETAILS AS REFERENCED BELOW.
5) RADIUS OR FLARE IS REQUIRED FOR TYPE II OR TYPE III CONNECTIONS. SEE DETAIL.
6) PARKING SPACES WITHIN COUNTY RIGHT-OF-WAY SHALL PROVIDE A MINIMUM OF 2 PARKING SPACES.
7) TYPICAL DRIVEWAY SECTIONS ARE TO BE 12' WIDE MINIMUM.

TYPE I CURB CUT DRIVEWAY FOR COUNTY TYPE "B" LAYBACK CURBS.

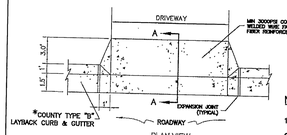

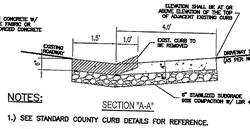

NOTES:
1.) SEE STANDARD COUNTY CURB DETAILS FOR REFERENCE.
2.) SEE F.D.O.T. INDEX NO. 515 FOR OTHER CONNECTIONS.
* FOR OTHER TYPE CURBS, DIMENSIONS MAY BE ADJUSTED TO FIT.

STANDARD DETAILS FOR INSTALLATION AND LOCATION OF STREET NAME SIGNS

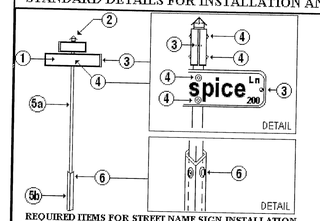

- INSTALL STREET NAME SIGNS ON CORNERS OF INTERSECTION SO THAT THEY WILL BE ON THE FAR RIGHT SIDE OF THE INTERSECTION FOR TRAFFIC ON THE MAJOR STREET IN ACCORDANCE WITH M.U.T.C.D. SECTION 2D.38
- INSTALL STREET NAME SIGN POST AT MID RADIUS, 10' OFF EDGE OF ROAD.
- "DEAD END" (W14-1P) OR "NO OUTLET" (W14-2P) PLAQUES MAY BE CO-MOUNTED TO STREET NAME SIGNS BENEATH STREET NAME SIGN BLADES IN ACCORDANCE WITH M.U.T.C.D. SECTION 2C.46.

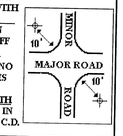

REQUIRED ITEMS FOR STREET NAME SIGN INSTALLATION

1	SIGN BLADE - .080" ALODIZED ALUMINUM CORNERS ROUNDED (1/2" RADIUS) FREE OF SHARP EDGES
2	ALUMINUM PYRAMID RAINCAP (ARC 175 OR EQUIVALENT)
3	3/16"X3/8" BLIND RIVETS (ENDS OF SIGN BLADES WILL BE RIVETED TOGETHER) (4 REQUIRED PER INSTALLATION)
4	3/8" STEEL DRIVE RIVETS ("SOUTHCO" 3878 OR EQUIVALENT) (8 REQUIRED PER INSTALLATION)
5	TELSPAR SIGN POST SYSTEM (GALVANIZED) OR EQUIVALENT (COMPRISED OF PARTS 5a AND 5b)
5a	1 3/4"X 1 3/4"X 10' - 14 GAUGE TELESCOPING TOP POST
5b	2"X 2"X 36" - 12 GAUGE SQUARE FIT ANCHOR POST
6	5/16"X 2 1/4" CORNER BOLT

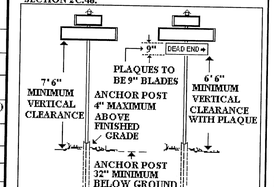

STANDARD DETAILS FOR STREET NAME SIGN BLADE LAYOUT

- F.D.O.T. TYPE III A REFLECTIVE SHEETING TO BE USED ON ALL STREET NAME SIGN BLADES.
- STREET NAME SIGN BLADES TO HAVE WHITE LEGENDS. 1/2" WHITE BORDERS AND GREEN BACKGROUND.
- PRIMARY LETTERING TO SERIES B, 6" UPPER CASE AND 4 1/2" LOWER CASE.
- PREFIX AND SUFFIX LETTERING TO BE SERIES C, 2 1/2" UPPER CASE AND 1 3/4" LOWER CASE.

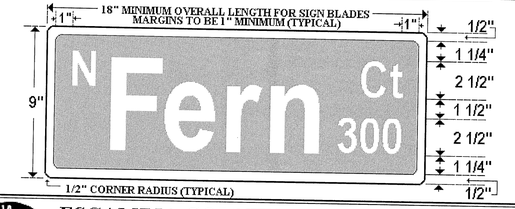

ESCAMBIA COUNTY STANDARD DETAILS
FOR STREET NAME SIGNS
DEPARTMENT OF ENGINEERING - TRAFFIC ENGINEERING DIVISION
Suite 1, 1190 West Leonard Street, Pensacola, Florida 32501-1116
BY: Alan Thedford, Engineering Technician III Revised 6-2002 * NOT TO SCALE *

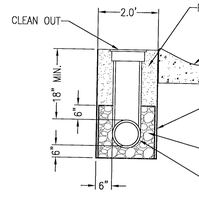

SECTION VIEW

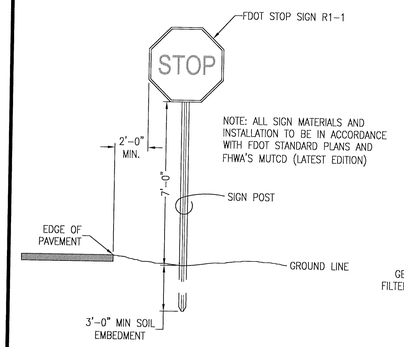

SIGN MOUNTING DETAIL
N.T.S.

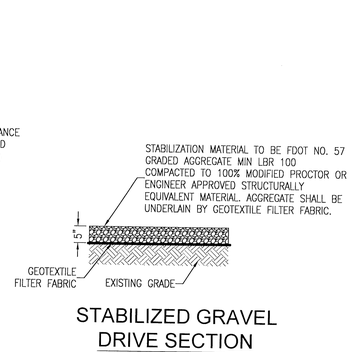

STABILIZED GRAVEL
DRIVE SECTION
N.T.S.

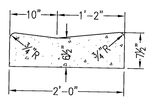

NOTE:
1. ALL CURB TO HAVE DUMMY JOINT AT 10' ON CENTER. MIN. DEPTH OF JOINT TO BE 2".
2. EXPANSION JOINTS ARE TO BE 30' ON CENTER. TYPICAL FOR ALL CURB.
3. ALL CONCRETE SHALL BE 3000 psi AT 28 DAYS.

VALLEY GUTTER
N.T.S.

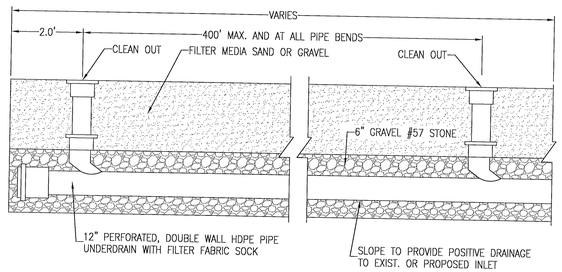

PROFILE VIEW

NOTE:
FILTER MEDIA SHALL MEET THE FOLLOWING CRITERIA GRAIN SIZE: BETWEEN 0.2 AND .55mm UNIFORMITY COEFFICIENT 1.5 AND 4.0 PERMEABILITY RATE BETWEEN 2.36 AND 5 FT./HR.

ROADSIDE UNDERDRAIN
NOT TO SCALE

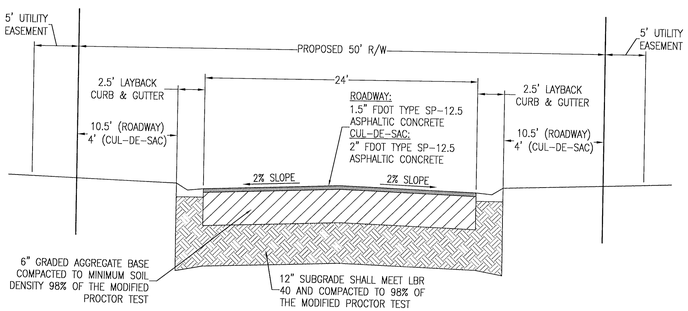

TYPICAL CROWNED ROAD SECTION
N.T.S.

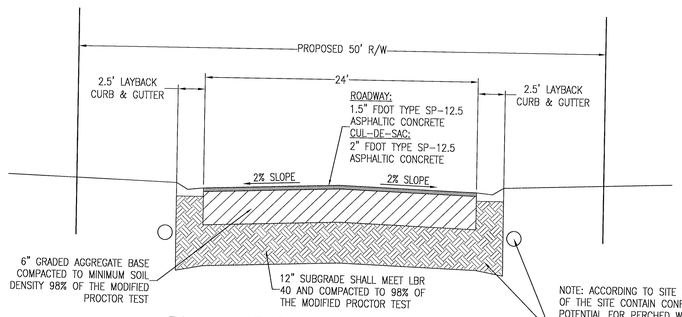

PERCHED WATER ROAD SECTION
N.T.S.

NOTE: ROADSIDE UNDERDRAINS SHALL BE USED WITH EOR AND COUNTY INSPECTOR/DESIGNEE BEFORE INSTALLATION

NOTE: ACCORDING TO SITE GEOTECHNICAL DATA, PORTIONS OF THE SITE CONTAIN CONFINING LAYERS CREATING THE POTENTIAL FOR PERCHED WATER BENEATH THE ROADWAYS. CONTRACTOR SHALL EXCAVATE THROUGH CONFINING LAYERS IF ENCOUNTERED WITHIN 2' BENEATH BOTTOM OF BASE ELEVATION AND BACKFILL WITH CLEAN SAND. IF GROUNDWATER PRESENCE REMAINS, CONTRACTOR SHALL INSTALL ROADSIDE UNDERDRAIN. SEE DETAIL.

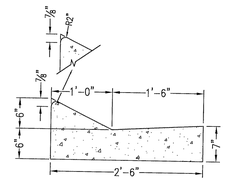

NOTES:
1. ALL CURB TO HAVE DUMMY JOINT AT 10' ON CENTER. MIN. DEPTH OF JOINT TO BE 2".
2. EXPANSION JOINTS ARE TO BE 30' ON CENTER. TYPICAL FOR ALL CURB.
3. ALL CONCRETE SHALL BE 3000 psi AT 28 DAYS.

LAYBACK CURB & GUTTER
N.T.S.

RBA
REBOL-BATTLE & ASSOCIATES
Civil Engineers and Surveyors
2301 N. Ninth Avenue, Suite 300
Pensacola, Florida 32503
Telephone: 850.438.9661 FAX: 850.438.9448
EB 00029657 LB7916

SITE LAYOUT &
DIMENSION PLAN

BROOKHAVEN PHASE 4
A 193 LOT SUBDIVISION
PENSACOLA, FLORIDA

No.	DATE	REVISION

SEAL
NOT FOR CONSTRUCTION
PAUL A. BATTLE, P.E.
No. 53126
6/15/22
STATE OF FLORIDA
PAUL A. BATTLE, P.E.
No.53126

Dr. By:
Ck By: PAB
Job No.: 2015.035 F
Date: 6/1/2022

DRAWING No.
C2.7

This drawing is the property of Reboli-Battle & Associates, and may not be reproduced without written permission.

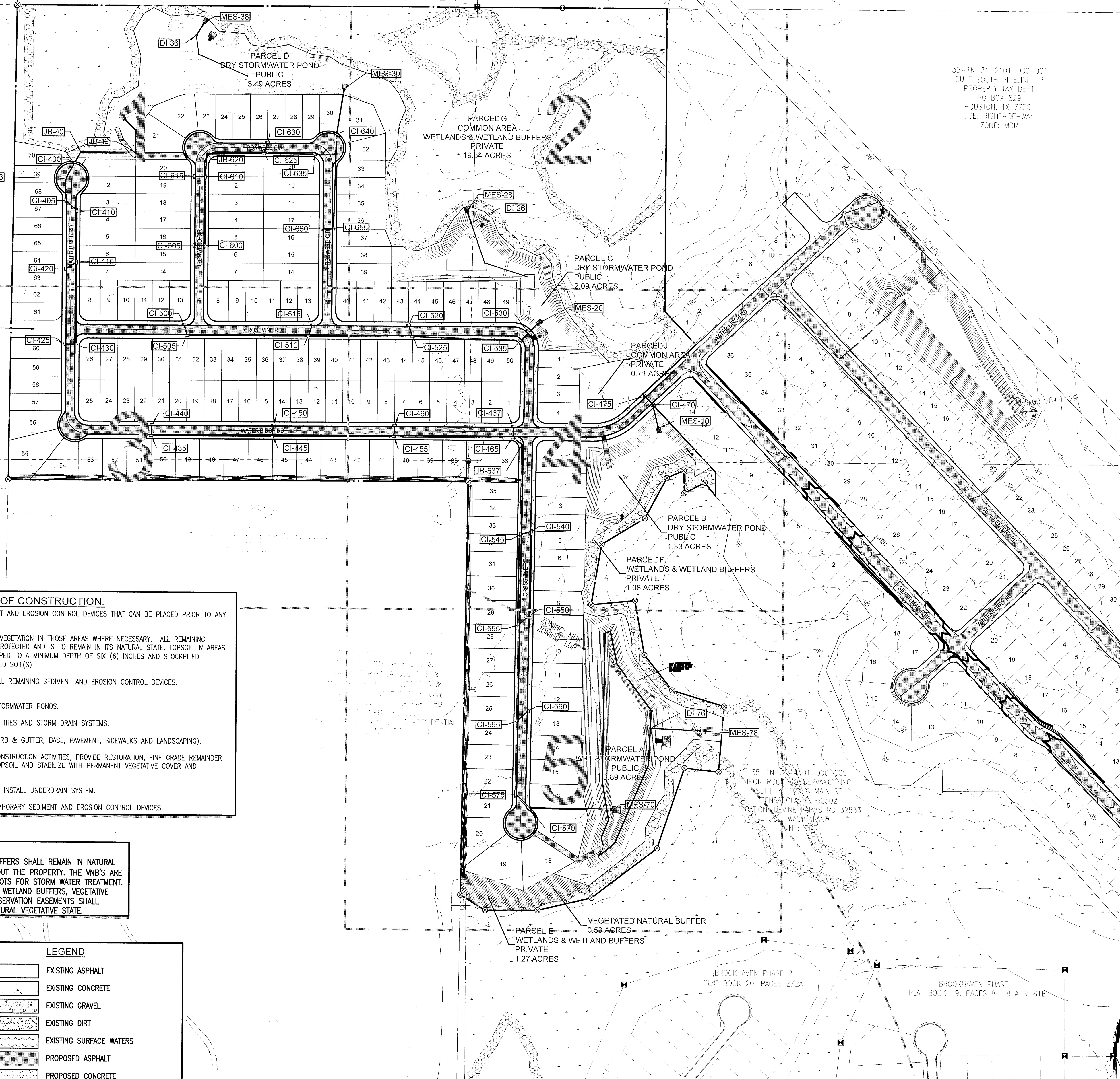

PROPOSED SEQUENCE OF CONSTRUCTION:

1. THE INSTALLATION OF ALL SEDIMENT AND EROSION CONTROL DEVICES THAT CAN BE PLACED PRIOR TO ANY MAJOR SOIL DISTURBANCES.
2. CLEAR AND REMOVE ALL EXISTING VEGETATION IN THOSE AREAS WHERE NECESSARY. ALL REMAINING VEGETATION IS TO BE PROPERLY PROTECTED AND IS TO REMAIN IN ITS NATURAL STATE. TOPSOIL IN AREAS TO BE DISTURBED IS TO BE STRIPPED TO A MINIMUM DEPTH OF SIX (6) INCHES AND STOCKPILED SEPARATELY FROM OTHER EXCAVATED SOIL(S)
3. THE IMMEDIATE INSTALLATION OF ALL REMAINING SEDIMENT AND EROSION CONTROL DEVICES.
4. PERFORM ALL DEMOLITION WORK.
5. CONSTRUCT ROUGH GRADING OF STORMWATER PONDS.
6. CONSTRUCT ALL UNDERGROUND UTILITIES AND STORM DRAIN SYSTEMS.
7. CONSTRUCT ROADS (SUBGRADE, CURB & GUTTER, BASE, PAVEMENT, SIDEWALKS AND LANDSCAPING).
8. UPON THE COMPLETION OF THE CONSTRUCTION ACTIVITIES, PROVIDE RESTORATION, FINE GRADE REMAINDER OF SITE, RESPREAD STOCKPILED TOPSOIL AND STABILIZE WITH PERMANENT VEGETATIVE COVER AND LANDSCAPING.
9. COMPLETE STORMWATER PONDS I.E. INSTALL UNDERDRAIN SYSTEM.
10. THE REMOVAL OF APPROPRIATE TEMPORARY SEDIMENT AND EROSION CONTROL DEVICES.

ENVIRONMENTAL NOTES:

1. ALL VEGETATIVE NATURAL BUFFERS SHALL REMAIN IN NATURAL VEGETATIVE STATE THROUGHOUT THE PROPERTY. THE VNB'S ARE USED TO TREAT THE REAR LOTS FOR STORM WATER TREATMENT.
2. ALL REMAINING WETLANDS & WETLAND BUFFERS, VEGETATIVE NATURAL BUFFERS AND CONSERVATION EASEMENTS SHALL REMAIN UNDISTURBED IN NATURAL VEGETATIVE STATE.

LEGEND

- EXISTING ASPHALT
- EXISTING CONCRETE
- EXISTING GRAVEL
- EXISTING DIRT
- EXISTING SURFACE WATERS
- PROPOSED ASPHALT
- PROPOSED CONCRETE
- WETLAND
- 25' WETLAND BUFFER
- PROPOSED ADDITIONAL WETLAND BUFFER
- VEGETATIVE NATURAL BUFFER
- 100 EXISTING CONTOUR
- 100 PROPOSED CONTOUR
- BENCHMARK
- FLOW ARROW
- 100.00 PROPOSED SPOT ELEVATION

SWALE NOTE:

1. 15' PUBLIC DRAINAGE/ACCESS EASEMENT SWALES ARE TO BE BUILT BY THE SITE CONTRACTOR.
2. 10' PRIVATE DRAINAGE EASEMENT SWALES (BETWEEN LOTS) ARE TO BE BUILT BY HOMEBUILDER

ESCAMBIA COUNTY SPECIAL NOTE:

CONSTRUCTION PLAN APPROVAL IS REQUIRED TO DOCUMENT THE DESIGN OF INFRASTRUCTURE TO ADEQUATELY SERVE THE CREATED LOTS. THE APPROVAL ALLOWS THE CONSTRUCTION OF THE SUBDIVISION INFRASTRUCTURE AREAS ONLY, AS SPECIFICALLY DESIGNATED, TO PROCEED BUT IT DOES NOT ALLOW DEVELOPMENT ON THE INDIVIDUAL SUBDIVISION LOTS. NEITHER PRELIMINARY PLAT OR CONSTRUCTION PLAN ALLOW LAND CLEARING/ LAND DISTURBANCE ACTIVITIES AND DEVELOPMENT ON THE INDIVIDUAL SUBDIVISION LOTS AS BUILDING PERMITS FOR THE DWELLINGS WILL BE REQUIRED FOR THESE ACTIVITIES PRIOR, ON EACH LOT/PARCEL IN THE FUTURE.

NOTES

1. THE DEVELOPER/CONTRACTOR SHALL INSTALL PRIOR TO THE START OF CONSTRUCTION AND MAINTAIN DURING CONSTRUCTION ALL SEDIMENT CONTROL MEASURES AS REQUIRED TO RETAIN ALL SEDIMENTS ON THE SITE. IMPROPER SEDIMENT MEASURES MAY RESULT IN CODE ENFORCEMENT VIOLATION(S).

2. NOTIFY SUNSHINE UTILITIES 811 A MINIMUM OF 72 HOURS IN ADVANCE PRIOR TO DIGGING WITHIN RIGHT-OF-WAY. (CALL - 811 OR 1-800-432-4770).

3. THE CONTRACTOR SHALL CONTROL STORMWATER DURING ALL PHASES OF CONSTRUCTION.

4. ALL DISTURBED AREAS WHICH ARE NOT SODDED OR PAVED SHALL BE STABILIZED WITH SEEDING, FERTILIZER, AND MULCH AND/OR HYDROSEED. SEEDED AREAS SHALL INCLUDE A BAHIA MIX TO ENSURE CONTINUED GROWTH AFTER WINTER MONTHS. SEED IN ACCORDANCE WITH FDOT SECTION 570 AND STANDARD INDEX 105

5. DEVELOPER/CONTRACTOR/HOME OWNER'S ASSOCIATION SHALL RESHAPE PER PLAN SPECIFICATIONS, CLEAN OUT ACCUMULATED SILT, AND STABILIZE RETENTION/DETENTION POND(S) AT THE END OF CONSTRUCTION WHEN ALL DISTURBED AREAS HAVE BEEN STABILIZED AND AT THE END OF THE 2-YEAR WARRANTY PERIOD.

6. ON SITES > 1 ACRE, IF > CONTIGUOUS ACRE IS CLEARED, A GROUND COVER SUFFICIENT TO PREVENT EROSION SHOULD BE PLANTED OR OTHERWISE STABILIZED WITHIN 10 WORKING DAYS ON THAT PORTION OF THE SITE UPON WHICH FURTHER ACTIVE CONSTRUCTION WILL NOT BE UNDERTAKEN WITHIN 90 DAYS.

7. TO COMPLY WITH NPDES REQUIREMENTS, ALL EROSION CONTROL MEASURES SHALL BE INSPECTED AFTER EACH 1/2" RAINFALL EVENT OR AT LEAST WEEKLY. THE CONTRACTOR SHALL DOCUMENT SUCH INSPECTIONS AND EROSION CONTROL MAINTENANCE EFFORTS; INSPECTION RECORDS SHALL BE PROVIDED TO THE NPDES PERMIT APPLICANT FOR PROPER REPORTING TO FDEP/NWFWMD.

8. A HEALTHY GROWTH OF GRASS WITHIN DISTURBED RIGHT-OF-WAY AREAS IS REQUIRED PRIOR TO COUNTY APPROVAL/ACCEPTANCE. IF TIME CONSTRAINTS EXIST DURING THE FINAL PLAT APPROVAL AND ACCEPTANCE PROCESS, A MINIMUM OF TWO STRIPS OF SOD (MINIMUM 2' WIDE) BEHIND THE BACK OF CURB WITH ALL OTHER DISTURBED AREAS SEEDED/MULCHED/FERTILIZED WILL BE ACCEPTABLE.

9. ALL NEW BUILDING ROOF DRAINS, DOWN SPOUTS, OR GUTTERS SHALL BE ROUTED TO CARRY ALL STORMWATER TO RETENTION/DETENTION AREAS.

10. NO DEVIATIONS OR REVISIONS FROM THESE PLANS BY THE CONTRACTOR SHALL BE ALLOWED WITHOUT PRIOR WRITTEN APPROVAL FROM BOTH THE DESIGN ENGINEER AND THE ESCAMBIA COUNTY. ANY DEVIATIONS MAY RESULT IN DELAYS IN COUNTY ACCEPTANCE OF IMPROVEMENTS.

11. CONTRACTOR SHALL MAINTAIN RECORD DRAWINGS DURING CONSTRUCTION WHICH SHOW "AS-BUILT" CONDITIONS OF ALL WORK INCLUDING PIPING, DRAINAGE STRUCTURES, TOPO OF POND(S), OUTLET STRUCTURES, DIMENSIONS, ELEVATIONS, GRADING, ETC. RECORD DRAWINGS SHALL BE PROVIDED TO THE ENGINEER OF RECORD PRIOR TO REQUESTING FINAL INSPECTION.

12. ALL ASPECTS OF THE STORMWATER/DRAINAGE COMPONENTS AND/OR TRANSPORTATION COMPONENTS SHALL BE COMPLETED PRIOR TO REQUESTING A FINAL INSPECTION.

13. THE OWNER OR HIS AGENT SHALL ARRANGE/SCHEDULE WITH THE COUNTY A FINAL INSPECTION OF THE DEVELOPMENT UPON COMPLETION AND ANY INTERMEDIATE INSPECTIONS AT (850) 595-3434. AS-BUILT PLANS & CERTIFICATION ARE REQUIRED PRIOR TO REQUEST FOR FINAL INSPECTION/APPROVAL.

14. THE PROJECT ENGINEER SHALL PROVIDE TO ESCAMBIA COUNTY "AS-BUILT" RECORD DRAWINGS FOR VERIFICATION AND APPROVAL BY ESCAMBIA COUNTY ONE WEEK PRIOR TO REQUESTING A FINAL INSPECTION, AND PROVIDE "AS-BUILT" CERTIFICATION THAT THE PROJECT CONSTRUCTION ADHERES TO THE PERMITTED PLANS AND SPECIFICATIONS. THE "AS-BUILT" CERTIFICATION OR THE "AS-BUILT" RECORD DRAWINGS MUST BE SIGNED, SEALED AND DATED BY A REGISTERED FLORIDA PROFESSIONAL ENGINEER.

15. THE OWNER/CONTRACTOR SHALL COORDINATE ANY ANTICIPATED COMMENCEMENT OF CONSTRUCTION WITH THE ENGINEER OF RECORD. AT LEAST 48 HOURS PRIOR TO CONSTRUCTION, THE CONTRACTOR SHALL BE RESPONSIBLE FOR SUBMITTING THE CONSTRUCTION COMMENCEMENT NOTICE FORM 62-330.350(1).

16. UPON SUBSTANTIAL COMPLETION, THE OWNER/CONTRACTOR SHALL NOTIFY THE ENGINEER OF RECORD. THE ENGINEER OF RECORD IS RESPONSIBLE FOR INSPECTION OF THE PERMITTED FACILITY FOR COMPLIANCE WITH THE APPROVED PERMIT. THE ENGINEER OF RECORD SHALL BE RESPONSIBLE FOR SUBMITTING THE 'AS BUILT CERTIFICATION AND REQUEST FOR CONVERSION TO OPERATIONAL PHASE FOR 62-330.310(1) WITHIN 30 DAYS AFTER WORK IS DEEMED COMPLETE.

17. THE OPERATION AND MAINTENANCE OF THE FACILITY WILL BE THE RESPONSIBILITY OF THE OWNER, AS IN ACCORDANCE WITH THE APPROVED PERMIT.

18. ELECTRIC/PHONE/CABLE/GAS STRUCTURES INSTALLED WITHIN DRAINAGE ACCESS EASEMENTS SHALL BE LOCATED ALONG THE BOUNDARY OF THE EASEMENT TO MAXIMIZE CLEAR ACCESS FOR MAINTENANCE EQUIPMENT.

19. MINIMUM ONE (1) FOOT GROUND COVER IS REQUIRED FOR ALL UNDERGROUND PIPES.

20. RIGHT-OF-WAY SHOULDER STABILIZATION SHALL BE IN ACCORDANCE WITH FDOT RIGHT-OF-WAY SHOULDER STABILIZATION SHALL BE IN ACCORDANCE WITH FDOT STANDARD SPECIFICATIONS FOR ROAD AND BRIDGE CONSTRUCTION, LATEST EDITION.

21. CONTRACTOR SHALL NOTIFY EOR OF ANY PERCHED GROUNDWATER ENCOUNTERED ON CONTRACTOR SHALL NOTIFY EOR OF ANY PERCHED GROUNDWATER ENCOUNTERED ON SITE. THE PRESENCE OF PERCHED GROUNDWATER MAY NECESSITATE THE INSTALLATION OF ROADSIDE UNDERDRAINS.

22. CONTRACTOR SHALL INSTALL UNDERDRAINS TO INTERCEPT PERCHED GROUNDWATER CONTRACTOR SHALL INSTALL UNDERDRAINS TO INTERCEPT PERCHED GROUNDWATER ENTERING PONDS THROUGH THE SIDE SLOPES. IN THE EVENT A STABILIZED PERMANENT GROUNDWATER TABLE IS ENCOUNTERED DURING POND EXCAVATION, THE CONTRACTOR SHALL NOTIFY EOR AND A MODIFICATION TO POND DESIGN SHALL BE SUBMITTED TO THE NWFWMD.

23. WORK PROPOSED NEXT TO THE R/W WITH EXISTING SWALE SYSTEMS MAY REQUIRE ADDITIONAL PROVISIONS TO REPAIR/RESTORE EXISTING DRAINAGE SWALES AS NEEDED TO ENSURE ADEQUATE DRAINAGE. R/W SHOULDER STABILIZATION SHOULD BE IN ACCORDANCE WITH FDOT STANDARD SPECIFICATIONS FOR ROAD AND BRIDGE CONSTRUCTION.

24. RETENTION/DETENTION AREAS SHALL BE SUBSTANTIALLY COMPLETE PRIOR TO ANY CONSTRUCTION ACTIVITIES THAT MAY INCREASE STORMWATER RUNOFF RATES. THE CONTRACTOR SHALL CONTROL STORMWATER DURING ALL PHASES OF CONSTRUCTION AND TAKE ADEQUATE MEASURES TO PREVENT THE EXCAVATED POND FROM BLINDING DUE TO SEDIMENTS.

25. SAG FILTERS IN CURB THROATS ARE NOT AN ALLOWABLE SEDIMENT CONTROL METHOD (POLICY 9-28-05).

RBA
REBOL-BATTLE & ASSOCIATES
Civil Engineers and Surveyors
2301 N. Ninth Avenue, Suite 300
Pensacola, Florida 32503
Telephone 850.438.0400 Fax 850.438.0448
EB 00009657 LB7916

GRADING & DRAINAGE PLAN

BROOKHAVEN PHASE 4

A 193 LOT SUBDIVISION
PENSACOLA, FLORIDA

No.	DATE	REVISION

SEAL
NOT FOR CONSTRUCTION
PAUL A. BATTLE, P.E.
No. 53126
6/15/22

Dr. By:
Ck By: PAB
Job No.: 2015.035 F
Date: 6/1/2022

DRAWING No.
C3.0

This drawing is the property of Rebol-Battle & Associates, and may not be reproduced without written permission.

P:\2015\2015.035 (F) - BROOKHAVEN PHASE 4\DRAWINGS\C3.0 GRADING PLAN.DWG

PIPE TABLE			
Pipe Name	Length	Size	Slope
PD-30	133'	24" RCP	1.41%
PD-36	45'	18" RCP	0.50%
PD-40	34'	18" RCP	8.72%
PD-42	159'	24" RCP	0.50%
PD-52	65'	24" RCP	1.84%
PD-54	47'	24" RCP	8.58%
PD-400	54'	18" RCP	2.05%
PD-405	63'	18" RCP	2.08%
PD-410	44'	18" RCP	1.23%
PD-415	150'	18" RCP	1.83%
PD-420	38'	18" RCP	0.95%
PD-430	238'	18" RCP	1.63%
PD-600	33'	18" RCP	0.50%
PD-605	200'	18" RCP	2.00%

PIPE TABLE			
Pipe Name	Length	Size	Slope
PD-610	33'	18" RCP	0.50%
PD-615	66'	18" RCP	0.50%
PD-620	146'	18" RCP	1.18%
PD-623	166'	18" RCP	0.50%
PD-625	34'	18" RCP	0.48%
PD-630	61'	24" RCP	0.71%
PD-650	215'	18" RCP	3.10%
PD-653	61'	24" RCP	0.50%
PD-655	33'	18" RCP	0.50%

DROP INLETS		
NAME	TOP ELEVATION	INVERTS
DI-36 TYPE 'D' OUTFALL STRUCTURE W/ 16"W x24"H SLOT INV=101.45	103.45	INV=94.32 (PD-34) INV=94.32 (PD-36)

CURB INLET		
NAME & DESCRIPTION	ELEVATIONS	INVERTS
CI-400 TYPE 'A' CURB INLET	TOP=116.96 EOP=116.54 THROAT=116.13	INV=112.42 (PD-400) INV=110.00 (PD-40)
CI-405 TYPE 'A' CURB INLET	TOP=118.93 EOP=118.51 THROAT=118.10	INV=114.83 (PD-410) INV=114.83 (PD-405)
CI-410 TYPE 'A' CURB INLET	TOP=119.51 EOP=119.09 THROAT=118.68	INV=115.38 (PD-410) INV=115.38 (PD-415)
CI-415 TYPE 'A' CURB INLET	TOP=122.42 EOP=122.00 THROAT=121.59	INV=118.13 (PD-420) INV=118.13 (PD-415) INV=118.13 (PD-430)
CI-420 TYPE 'A' CURB INLET	TOP=122.81 EOP=122.39 THROAT=121.98	INV=118.49 (PD-420)
CI-600 TYPE 'A' CURB INLET	TOP=119.13 EOP=118.71 THROAT=118.30	INV=110.50 (PD-600) INV=110.50 (PD-605)
CI-605 TYPE 'A' CURB INLET	TOP=119.13 EOP=118.71 THROAT=118.30	INV=110.66 (PD-600)
CI-610 TYPE 'A' CURB INLET	TOP=114.79 EOP=114.37 THROAT=113.96	INV=106.50 (PD-610) INV=106.50 (PD-605) INV=106.50 (PD-615)
CI-615 TYPE 'A' CURB INLET	TOP=114.79 EOP=114.37 THROAT=113.96	INV=106.66 (PD-610)
CI-625 TYPE 'A' CURB INLET	TOP=112.20 EOP=111.78 THROAT=111.37	INV=105.34 (PD-623) INV=105.34 (PD-620) INV=105.34 (PD-625)
CI-630 TYPE 'A' CURB INLET	TOP=112.15 EOP=111.73 THROAT=111.32	INV=105.50 (PD-625)
CI-635 TYPE 'A' CURB INLET	TOP=111.42 EOP=111.00 THROAT=110.59	INV=103.61 (PD-630) INV=103.61 (PD-620)
CI-640 TYPE DOUBLE 'A' CURB INLET	TOP=110.46 EOP=110.04 THROAT=109.63	INV=102.87 (PD-30) INV=102.87 (PD-653)
CI-655 TYPE 'A' CURB INLET	TOP=113.91 EOP=113.49 THROAT=113.08	INV=109.84 (PD-655) INV=109.84 (PD-650)
CI-660 TYPE 'A' CURB INLET	TOP=113.91 EOP=113.49 THROAT=113.08	INV=110.00 (PD-655)

STORMWATER JUNCTION BOX		
NAME	TOP ELEVATION	INVERTS
JB-40 JUNCTION BOX	111.98	INV=107.00 (PD-40) INV=107.00 (PD-42)
JB-42 JUNCTION BOX	115.54	INV=106.20 (PD-42) INV=106.20 (PD-52)
JB-52 JUNCTION BOX	112.75	INV=105.00 (PD-52) INV=105.00 (PD-54)
JB-403 JUNCTION BOX	117.49	INV=113.52 (PD-405) INV=113.52 (PD-400)
JB-620 JUNCTION BOX	113.04	INV=106.17 (PD-615) INV=106.17 (PD-623)
JB-645 JUNCTION BOX	110.91	INV=103.18 (PD-650) INV=103.18 (PD-653) INV=103.18 (PD-630)

MITERED END SECTIONS	
NAME	INVERT
MES-30	INV=101.00' (PD-30)
MES-38	INV=94.05' (PD-36)
MES-56	INV=101.00' (PD-54)

PROPOSED SEQUENCE OF CONSTRUCTION:

1. THE INSTALLATION OF ALL SEDIMENT AND EROSION CONTROL DEVICES THAT CAN BE PLACED PRIOR TO ANY MAJOR SOIL DISTURBANCES.
2. CLEAR AND REMOVE ALL EXISTING VEGETATION IN THOSE AREAS WHERE NECESSARY. ALL REMAINING VEGETATION IS TO BE PROPERLY PROTECTED AND IS TO REMAIN IN ITS NATURAL STATE. TOPSOIL IN AREAS TO BE DISTURBED IS TO BE STRIPPED TO A MINIMUM DEPTH OF SIX (6) INCHES AND STOCKPILED SEPARATELY FROM OTHER EXCAVATED SOIL(S)
3. THE IMMEDIATE INSTALLATION OF ALL REMAINING SEDIMENT AND EROSION CONTROL DEVICES.
4. PERFORM ALL DEMOLITION WORK.
5. CONSTRUCT ROUGH GRADING OF STORMWATER PONDS.
6. CONSTRUCT ALL UNDERGROUND UTILITIES AND STORM DRAIN SYSTEMS.
7. CONSTRUCT ROADS (SUBGRADE, CURB & GUTTER, BASE, PAVEMENT, SIDEWALKS AND LANDSCAPING).
8. UPON THE COMPLETION OF THE CONSTRUCTION ACTIVITIES, PROVIDE RESTORATION, FINE GRADE REMAINDER OF SITE, RESPREAD STOCKPILED TOPSOIL AND STABILIZE WITH PERMANENT VEGETATIVE COVER AND LANDSCAPING.
9. COMPLETE STORMWATER PONDS I.E. INSTALL UNDERDRAIN SYSTEM.
10. THE REMOVAL OF APPROPRIATE TEMPORARY SEDIMENT AND EROSION CONTROL DEVICES.

ESCAMBIA COUNTY SPECIAL NOTE:

CONSTRUCTION PLAN APPROVAL IS REQUIRED TO DOCUMENT THE DESIGN OF INFRASTRUCTURE TO ADEQUATELY SERVE THE CREATED LOTS. THE APPROVAL ALLOWS THE CONSTRUCTION OF THE SUBDIVISION INFRASTRUCTURE AREAS ONLY, AS SPECIFICALLY DESIGNATED, TO PROCEED BUT IT DOES NOT ALLOW DEVELOPMENT ON THE INDIVIDUAL SUBDIVISION LOTS. NEITHER PRELIMINARY PLAT OR CONSTRUCTION PLAN ALLOW LAND CLEARING/ LAND DISTURBANCE ACTIVITIES AND DEVELOPMENT ON THE INDIVIDUAL SUBDIVISION LOTS AS BUILDING PERMITS FOR THE DWELLINGS WILL BE REQUIRED FOR THESE ACTIVITIES PRIOR, ON EACH LOT/PARCEL IN THE FUTURE.

SWALE NOTE:

1. 15' PUBLIC DRAINAGE/ACCESS EASEMENT SWALES ARE TO BE BUILT BY THE SITE CONTRACTOR.
2. 10' PRIVATE DRAINAGE EASEMENT SWALES (BETWEEN LOTS) ARE TO BE BUILT BY HOMEBUILDER

ENVIRONMENTAL NOTES:

1. ALL VEGETATIVE NATURAL BUFFERS SHALL REMAIN IN NATURAL VEGETATIVE STATE THROUGHOUT THE PROPERTY. THE VNB'S ARE USED TO TREAT THE REAR LOTS FOR STORM WATER TREATMENT.
2. ALL REMAINING WETLANDS & WETLAND BUFFERS, VEGETATIVE NATURAL BUFFERS AND CONSERVATION EASEMENTS SHALL REMAIN UNDISTURBED IN NATURAL VEGETATIVE STATE.

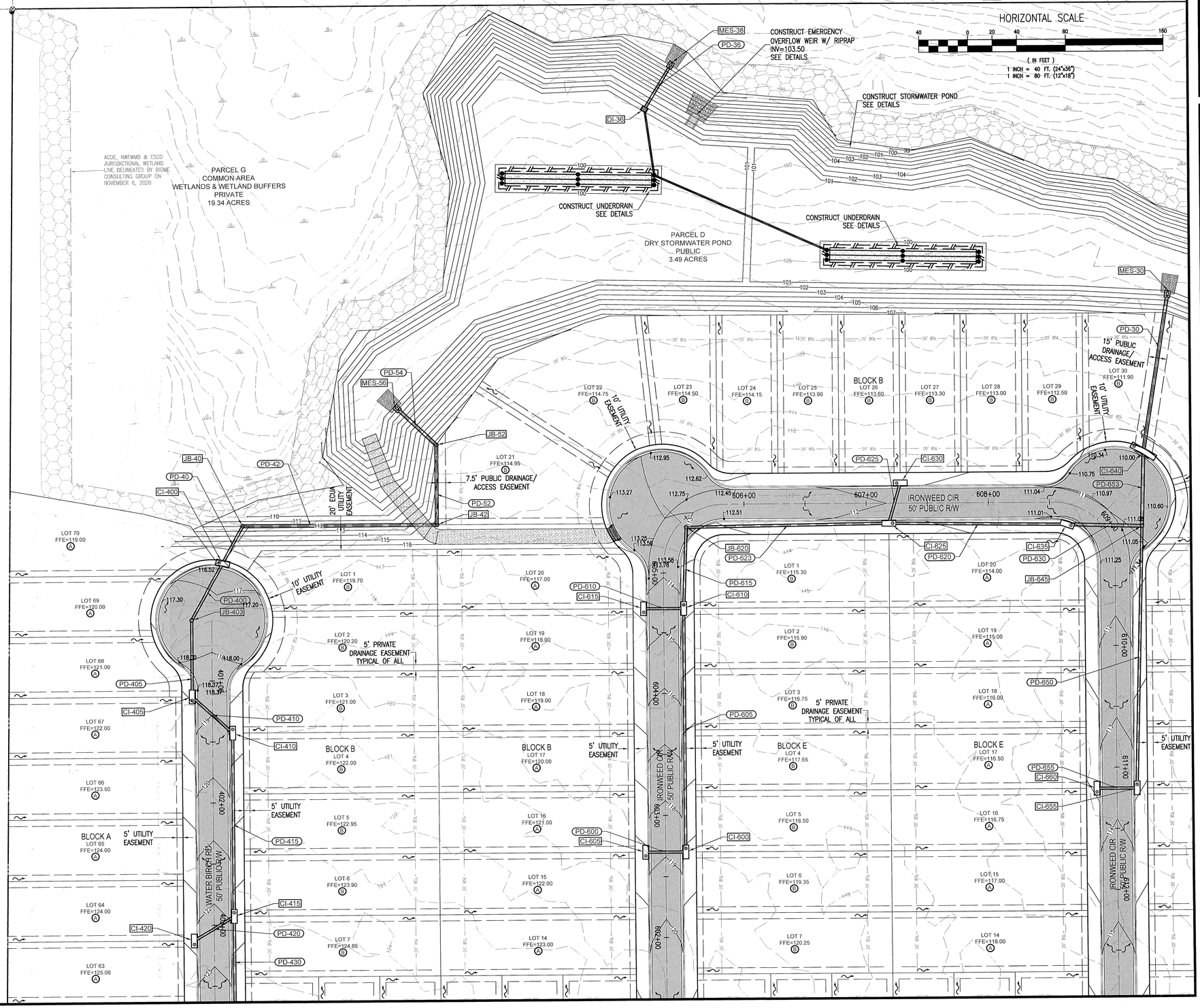

REBOL-BATTLE & ASSOCIATES
Civil Engineers and Surveyors
2301 N. Palafox Street, Suite 100
Pensacola, Florida 32503
Telephone 850.438.0400 Fax 850.438.0448
EB 0000966?? LB?7916

BROOKHAVEN PHASE 4
A 193 LOT SUBDIVISION
PENSACOLA, FLORIDA

GRADING & DRAINAGE PLAN

No.	DATE	REVISION

SEAL
NOT FOR CONSTRUCTION
PAUL A. BATTLE JR. LICENSE No. 53126 STATE OF FLORIDA
6/15/22

Dr. By:
Ck By: PAB
Job No.: 2015.035 F
Date: 6/1/2022

DRAWING No.
C3.1

This drawing is the property of Rebol-Battle & Associates, and may not be reproduced without written permission.

J:\2015\2015.035 (F) - BROOKHAVEN PHASE 4\DRAWINGS\3 GRADING PLAN.DWG

HORIZONTAL SCALE

40 0 20 40 80 160

(IN FEET)

1 INCH = 40 FT. (24"x36")

1 INCH = 80 FT. (12"x18")

N W E S

PARCEL D
DRY STORMWATER POND
PUBLIC
3.49 ACRES

PARCEL G
COMMON AREA
WETLANDS & WETLAND BUFFERS
PRIVATE
19.34 ACRES

PARCEL C
DRY STORMWATER POND
PUBLIC
2.09 ACRES

LOT 31
FFE=111.90
B

LOT 32
FFE=112.30
B

LOT 33
FFE=112.90
B

LOT 34
FFE=113.60
B

BLOCK B
LOT 35
FFE=114.15
B

LOT 36
FFE=114.75
B

LOT 37
FFE=115.35
B

LOT 38
FFE=115.95
B

LOT 39
FFE=116.55
B

CONSTRUCT STORMWATER POND
SEE DETAILS

'5' PRIVATE
DRAINAGE EASEMENT
TYPICAL OF ALL

ACOE, NWFWMD & ESCO JURISDICTIONAL WETLAND LINE DELINEATED BY BIOME CONSULTING GROUP ON NOVEMBER 6, 2020

MES-28
Sta:25+20.3; 0.0
INSTALL MES W/ RIPRAP
INV=101.00

PD-24
INSTALL 36LF OF
24" RCP @ 1.00%

DI-26
Sta:24+84.6; 0.0
INSTALL TYPE 'D' OUTFALL STRUCTURE
W/ 12"Wx18"H SLOT
INV=107.57
TOP EL=109.07
INV=101.36 (PD-22; S)
INV=101.36 (PD-24; N)

CONSTRUCT EMERGENCY
OVERFLOW WEIR W/ RIPRAP
INV=109.50
SEE DETAILS

CONSTRUCT STORMWATER POND
SEE DETAILS

CONSTRUCT UNDERDRAIN
SEE DETAILS

CONSTRUCT UNDERDRAIN
SEE DETAILS

PROPOSED SEQUENCE OF CONSTRUCTION:

1. THE INSTALLATION OF ALL SEDIMENT AND EROSION CONTROL DEVICES THAT CAN BE PLACED PRIOR TO ANY MAJOR SOIL DISTURBANCES.
2. CLEAR AND REMOVE ALL EXISTING VEGETATION IN THOSE AREAS WHERE NECESSARY. ALL REMAINING VEGETATION IS TO BE PROPERLY PROTECTED AND IS TO REMAIN IN ITS NATURAL STATE. TOPSOIL IN AREAS TO BE DISTURBED IS TO BE STRIPPED TO A MINIMUM DEPTH OF SIX (6) INCHES AND STOCKPILED SEPARATELY FROM OTHER EXCAVATED SOIL(S)
3. THE IMMEDIATE INSTALLATION OF ALL REMAINING SEDIMENT AND EROSION CONTROL DEVICES.
4. PERFORM ALL DEMOLITION WORK.
5. CONSTRUCT ROUGH GRADING OF STORMWATER PONDS.
6. CONSTRUCT ALL UNDERGROUND UTILITIES AND STORM DRAIN SYSTEMS.
7. CONSTRUCT ROADS (SUBGRADE, CURB & GUTTER, BASE, PAVEMENT, SIDEWALKS AND LANDSCAPING).
8. UPON THE COMPLETION OF THE CONSTRUCTION ACTIVITIES, PROVIDE RESTORATION, FINE GRADE REMAINDER OF SITE, RESPREAD STOCKPILED TOPSOIL AND STABILIZE WITH PERMANENT VEGETATIVE COVER AND LANDSCAPING.
9. COMPLETE STORMWATER PONDS I.E. INSTALL UNDERDRAIN SYSTEM.
10. THE REMOVAL OF APPROPRIATE TEMPORARY SEDIMENT AND EROSION CONTROL DEVICES.

ENVIRONMENTAL NOTES:

1. ALL VEGETATIVE NATURAL BUFFERS SHALL REMAIN IN NATURAL VEGETATIVE STATE THROUGHOUT THE PROPERTY. THE VNB'S ARE USED TO TREAT THE REAR LOTS FOR STORM WATER TREATMENT.
2. ALL REMAINING WETLANDS & WETLAND BUFFERS, VEGETATIVE NATURAL BUFFERS AND CONSERVATION EASEMENTS SHALL REMAIN UNDISTURBED IN NATURAL VEGETATIVE STATE.

SWALE NOTE:

1. 15' PUBLIC DRAINAGE/ACCESS EASEMENT SWALES ARE TO BE BUILT BY THE SITE CONTRACTOR.
2. 10' PRIVATE DRAINAGE EASEMENT SWALES (BETWEEN LOTS) ARE TO BE BUILT BY HOMEBUILDER

ESCAMBIA COUNTY SPECIAL NOTE:

CONSTRUCTION PLAN APPROVAL IS REQUIRED TO DOCUMENT THE DESIGN OF INFRASTRUCTURE TO ADEQUATELY SERVE THE CREATED LOTS. THE APPROVAL ALLOWS THE CONSTRUCTION OF THE SUBDIVISION INFRASTRUCTURE AREAS ONLY, AS SPECIFICALLY DESIGNATED, TO PROCEED BUT IT DOES NOT ALLOW DEVELOPMENT ON THE INDIVIDUAL SUBDIVISION LOTS. NEITHER PRELIMINARY PLAT OR CONSTRUCTION PLAN ALLOW LAND CLEARING/ LAND DISTURBANCE ACTIVITIES AND DEVELOPMENT ON THE INDIVIDUAL SUBDIVISION LOTS AS BUILDING PERMITS FOR THE DWELLINGS WILL BE REQUIRED FOR THESE ACTIVITIES PRIOR, ON EACH LOT/PARCEL IN THE FUTURE.

RBA
REBOL-BATTLE & ASSOCIATES
Civil Engineers and Surveyors
2301 N. Ninth Avenue Suite 300
Pensacola, Florida 32503
Telephone 850.438.0400 Fax 850.438.0448
EB 00006957 LB7916

GRADING & DRAINAGE PLAN

BROOKHAVEN PHASE 4
A 193 LOT SUBDIVISION
PENSACOLA, FLORIDA

No.	DATE	REVISION

SEAL
NOT FOR CONSTRUCTION
PAUL A. BATTLE, P.E.
LICENSE No. 56126
STATE OF FLORIDA
6/1/22

Dr. By:
Ck By: PAB
Job No.: 2015.035 F
Date: 6/1/2022

DRAWING No.
C3.2

This drawing is the property of Rebol-Battle & Associates, and may not be reproduced without written permission.

P:\2015\2015.035 (F) - BROOKHAVEN PHASE 4\DRAWINGS\C3.2 GRADING PLAN.DWG

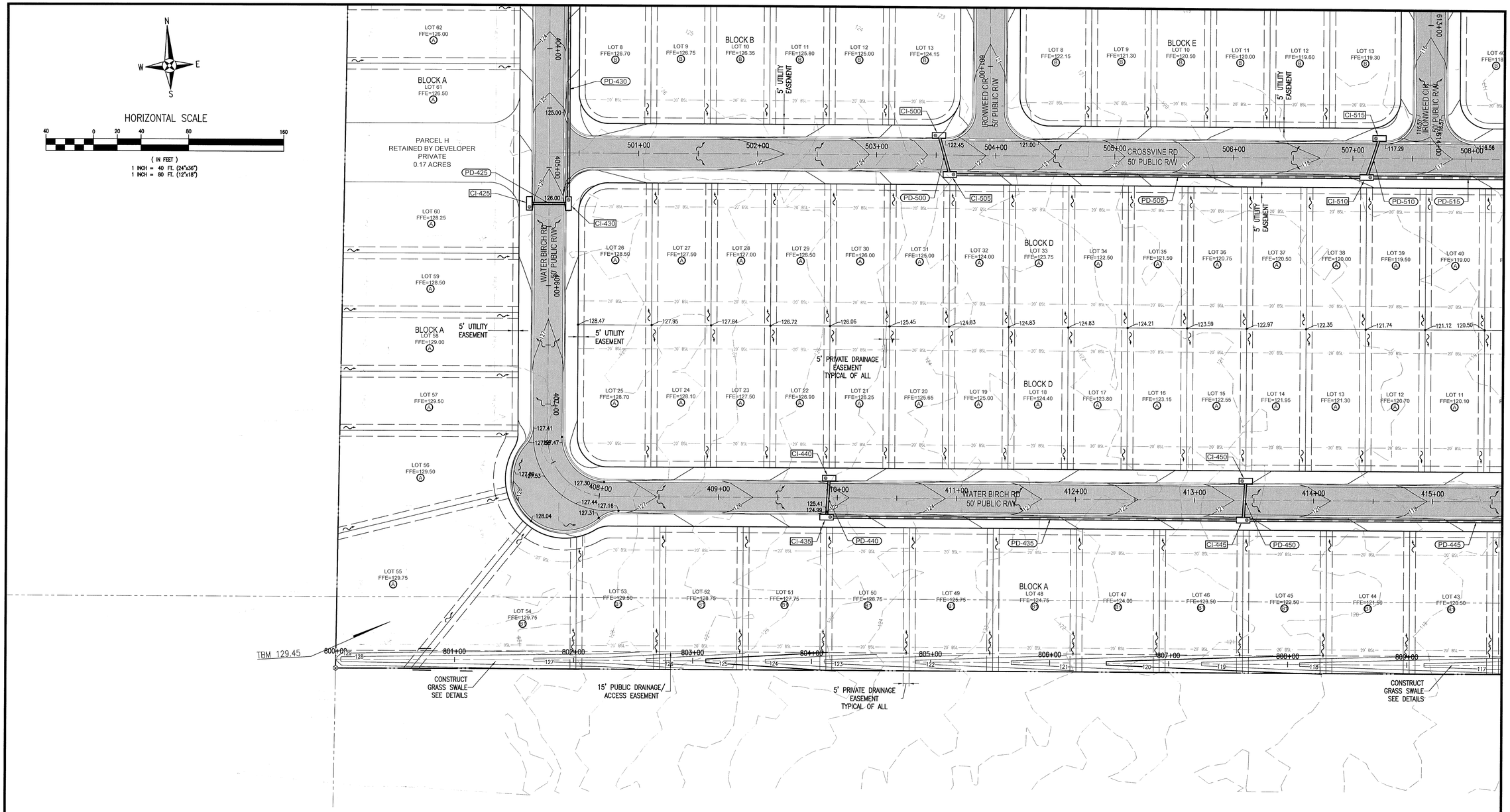

PROPOSED SEQUENCE OF CONSTRUCTION:

1. THE INSTALLATION OF ALL SEDIMENT AND EROSION CONTROL DEVICES THAT CAN BE PLACED PRIOR TO ANY MAJOR SOIL DISTURBANCES.
2. CLEAR AND REMOVE ALL EXISTING VEGETATION IN THOSE AREAS WHERE NECESSARY. ALL REMAINING VEGETATION IS TO BE PROPERLY PROTECTED AND IS TO REMAIN IN ITS NATURAL STATE. TOPSOIL IN AREAS TO BE DISTURBED IS TO BE STRIPPED TO A MINIMUM DEPTH OF SIX (6) INCHES AND STOCKPILED SEPARATELY FROM OTHER EXCAVATED SOIL(S)
3. THE IMMEDIATE INSTALLATION OF ALL REMAINING SEDIMENT AND EROSION CONTROL DEVICES.
4. PERFORM ALL DEMOLITION WORK.
5. CONSTRUCT ROUGH GRADING OF STORMWATER PONDS.
6. CONSTRUCT ALL UNDERGROUND UTILITIES AND STORM DRAIN SYSTEMS.
7. CONSTRUCT ROADS (SUBGRADE, CURB & GUTTER, BASE, PAVEMENT, SIDEWALKS AND LANDSCAPING).
8. UPON THE COMPLETION OF THE CONSTRUCTION ACTIVITIES, PROVIDE RESTORATION, FINE GRADE REMAINDER OF SITE, RESPREAD STOCKPILED TOPSOIL AND STABILIZE WITH PERMANENT VEGETATIVE COVER AND LANDSCAPING.
9. COMPLETE STORMWATER PONDS I.E. INSTALL UNDERDRAIN SYSTEM.
10. THE REMOVAL OF APPROPRIATE TEMPORARY SEDIMENT AND EROSION CONTROL DEVICES.

SWALE NOTE:

1. 15' PUBLIC DRAINAGE/ACCESS EASEMENT SWALES ARE TO BE BUILT BY THE SITE CONTRACTOR.
2. 10' PRIVATE DRAINAGE EASEMENT SWALES (BETWEEN LOTS) ARE TO BE BUILT BY HOMEBUILDER

ENVIRONMENTAL NOTES:

1. ALL VEGETATIVE NATURAL BUFFERS SHALL REMAIN IN NATURAL VEGETATIVE STATE THROUGHOUT THE PROPERTY. THE VNB'S ARE USED TO TREAT THE REAR LOTS FOR STORM WATER TREATMENT.
2. ALL REMAINING WETLANDS & WETLAND BUFFERS, VEGETATIVE NATURAL BUFFERS AND CONSERVATION EASEMENTS SHALL REMAIN UNDISTURBED IN NATURAL VEGETATIVE STATE.

ESCAMBIA COUNTY SPECIAL NOTE:

CONSTRUCTION PLAN APPROVAL IS REQUIRED TO DOCUMENT THE DESIGN OF INFRASTRUCTURE TO ADEQUATELY SERVE THE CREATED LOTS. THE APPROVAL ALLOWS THE CONSTRUCTION OF THE SUBDIVISION INFRASTRUCTURE AREAS ONLY, AS SPECIFICALLY DESIGNATED, TO PROCEED BUT IT DOES NOT ALLOW DEVELOPMENT ON THE INDIVIDUAL SUBDIVISION LOTS. NEITHER PRELIMINARY PLAT OR CONSTRUCTION PLAN ALLOW LAND CLEARING/ LAND DISTURBANCE ACTIVITIES AND DEVELOPMENT ON THE INDIVIDUAL SUBDIVISION LOTS AS BUILDING PERMITS FOR THE DWELLINGS WILL BE REQUIRED FOR THESE ACTIVITIES PRIOR, ON EACH LOT/PARCEL IN THE FUTURE.

PIPE TABLE

Pipe Name	Length	Size	Slope
PD-425	33'	18" RCP	1.52%
PD-430	238'	18" RCP	1.63%
PD-435	350'	18" RCP	0.92%
PD-440	33'	18" RCP	0.50%
PD-445	350'	18" RCP	1.24%
PD-450	33'	18" RCP	0.50%
PD-500	34'	18" RCP	0.50%
PD-505	350'	18" RCP	1.38%
PD-510	35'	18" RCP	0.50%
PD-515	300'	24" RCP	0.50%

CURB INLET

NAME & DESCRIPTION	ELEVATIONS	INVERTS
CI-425 TYPE 'A' CURB INLET	TOP=126.51 EOP=126.09 THROAT=125.68	INV=122.50 (PD-425)
CI-430 TYPE 'A' CURB INLET	TOP=126.51 EOP=126.09 THROAT=125.68	INV=122.00 (PD-425) INV=122.00 (PD-430)
CI-435 TYPE 'A' CURB INLET	TOP=125.45 EOP=125.03 THROAT=124.62	INV=119.84 (PD-440) INV=119.84 (PD-435)
CI-440 TYPE 'A' CURB INLET	TOP=125.42 EOP=125.00 THROAT=124.59	INV=120.00 (PD-440)
CI-445 TYPE 'A' CURB INLET	TOP=121.12 EOP=120.70 THROAT=120.29	INV=116.62 (PD-435) INV=116.62 (PD-445) INV=116.62 (PD-450)
CI-450 TYPE 'A' CURB INLET	TOP=121.10 EOP=120.68 THROAT=120.27	INV=116.78 (PD-450)
CI-500 TYPE 'A' CURB INLET	TOP=123.02 EOP=122.60 THROAT=122.19	INV=115.50 (PD-500)
CI-505 TYPE 'A' CURB INLET	TOP=122.83 EOP=122.41 THROAT=122.00	INV=115.33 (PD-500) INV=115.33 (PD-505)
CI-510 TYPE 'A' CURB INLET	TOP=117.88 EOP=117.46 THROAT=117.05	INV=110.50 (PD-510) INV=110.50 (PD-505) INV=110.50 (PD-515)
CI-515 TYPE 'A' CURB INLET	TOP=117.79 EOP=117.37 THROAT=116.96	INV=110.67 (PD-510)

REBOL-BATTLE & ASSOCIATES
Civil Engineers and Surveyors
230½ N. Ninth Avenue, Suite 300
Pensacola, Florida 32503
Telephone 850-438-1400 FAX 850-438-9448
EB 00009857 L87916

GRADING & DRAINAGE PLAN

BROOKHAVEN PHASE 4
A 193 LOT SUBDIVISION
PENSACOLA, FLORIDA

No.	DATE	REVISION

SEAL
NOT FOR CONSTRUCTION
PAUL A. BATTLE, P.E. LICENSE No. 53240 6/15/22 STATE OF FLORIDA PAUL A. BATTLE, P.E. NO. 53240

Dr. By:
Ck By: PAB
Job No.: 2015.035 F
Date: 6/1/2022

DRAWING No.
C3.3

This drawing is the property of Rebol-Battle & Associates, and may not be reproduced without written permission.

I:\2015\2015.035 DT - BROOKHAVEN PHASE 4\DRAWINGS\03 ENGINEERING\ENGINEERING PLAN.DWG

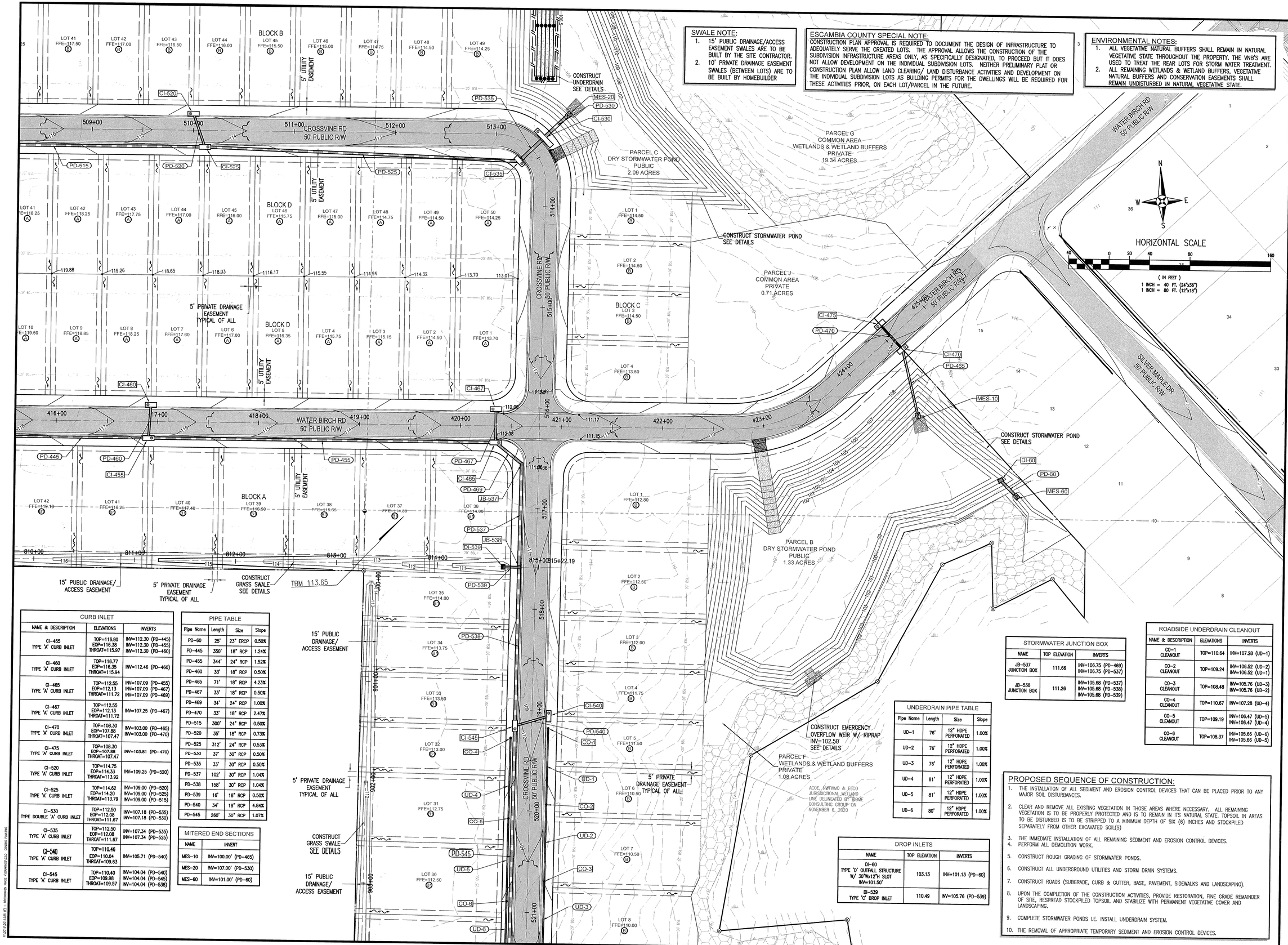

CURB INLET		
NAME & DESCRIPTION	ELEVATIONS	INVERTS
CI-455 TYPE 'A' CURB INLET	TOP=116.80 EOP=116.38 THROAT=115.97	INV=112.30 (PD-445) INV=112.30 (PD-455) INV=112.30 (PD-460)
CI-460 TYPE 'A' CURB INLET	TOP=116.77 EOP=116.35 THROAT=115.94	INV=112.46 (PD-460)
CI-465 TYPE 'A' CURB INLET	TOP=112.55 EOP=112.13 THROAT=111.72	INV=107.09 (PD-455) INV=107.09 (PD-467) INV=107.09 (PD-469)
CI-467 TYPE 'A' CURB INLET	TOP=112.55 EOP=112.13 THROAT=111.72	INV=107.25 (PD-467)
CI-470 TYPE 'A' CURB INLET	TOP=108.30 EOP=107.88 THROAT=107.47	INV=103.00 (PD-465) INV=103.00 (PD-470)
CI-475 TYPE 'A' CURB INLET	TOP=108.30 EOP=107.88 THROAT=107.47	INV=103.81 (PD-470)
CI-520 TYPE 'A' CURB INLET	TOP=114.75 EOP=114.33 THROAT=113.92	INV=109.25 (PD-520)
CI-525 TYPE 'A' CURB INLET	TOP=114.62 EOP=114.20 THROAT=113.79	INV=109.00 (PD-520) INV=109.00 (PD-525) INV=109.00 (PD-515)
CI-530 TYPE DOUBLE 'A' CURB INLET	TOP=112.50 EOP=112.08 THROAT=111.67	INV=107.18 (PD-535) INV=107.18 (PD-530)
CI-535 TYPE 'A' CURB INLET	TOP=112.50 EOP=112.08 THROAT=111.67	INV=107.34 (PD-535) INV=107.34 (PD-525)
CI-540 TYPE 'A' CURB INLET	TOP=110.46 EOP=110.04 THROAT=109.63	INV=105.71 (PD-540)
CI-545 TYPE 'A' CURB INLET	TOP=110.40 EOP=109.98 THROAT=109.57	INV=104.04 (PD-540) INV=104.04 (PD-545) INV=104.04 (PD-538)

PIPE TABLE			
Pipe Name	Length	Size	Slope
PD-60	25'	23" ERCP	0.50%
PD-445	350'	18" RCP	1.24%
PD-455	344'	24" RCP	1.52%
PD-460	33'	18" RCP	0.50%
PD-465	71'	18" RCP	4.23%
PD-467	33'	18" RCP	0.50%
PD-469	34'	24" RCP	1.00%
PD-470	33'	18" RCP	2.47%
PD-515	300'	24" RCP	0.50%
PD-520	35'	18" RCP	0.73%
PD-525	312'	24" RCP	0.53%
PD-530	37'	30" RCP	0.50%
PD-535	33'	30" RCP	0.50%
PD-537	102'	30" RCP	1.04%
PD-538	158'	30" RCP	1.04%
PD-539	16'	18" RCP	0.50%
PD-540	34'	18" RCP	4.84%
PD-545	260'	30" RCP	1.07%

MITERED END SECTIONS	
NAME	INVERT
MES-10	INV=100.00' (PD-465)
MES-20	INV=107.00' (PD-530)
MES-60	INV=101.00' (PD-60)

STORMWATER JUNCTION BOX		
NAME	TOP ELEVATION	INVERTS
JB-537 JUNCTION BOX	111.66	INV=106.75 (PD-469) INV=106.75 (PD-537)
JB-538 JUNCTION BOX	111.26	INV=105.68 (PD-537) INV=105.68 (PD-538) INV=105.68 (PD-539)

UNDERDRAIN PIPE TABLE			
Pipe Name	Length	Size	Slope
UD-1	76'	12" HDPE PERFORATED	1.00%
UD-2	76'	12" HDPE PERFORATED	1.00%
UD-3	76'	12" HDPE PERFORATED	1.00%
UD-4	81'	12" HDPE PERFORATED	1.00%
UD-5	81'	12" HDPE PERFORATED	1.00%
UD-6	80'	12" HDPE PERFORATED	1.00%

DROP INLETS		
NAME	TOP ELEVATION	INVERTS
DI-60 TYPE 'D' OUTFALL STRUCTURE W/ 30"Wx12"H SLOT INV=101.50'	103.13	INV=101.13 (PD-60)
DI-539 TYPE 'C' DROP INLET	110.49	INV=105.76 (PD-539)

ROADSIDE UNDERDRAIN CLEANOUT		
NAME & DESCRIPTION	ELEVATIONS	INVERTS
CO-1 CLEANOUT	TOP=110.64	INV=107.28 (UD-1)
CO-2 CLEANOUT	TOP=109.24	INV=106.52 (UD-2) INV=106.52 (UD-1)
CO-3 CLEANOUT	TOP=108.48	INV=105.76 (UD-3) INV=105.76 (UD-2)
CO-4 CLEANOUT	TOP=110.67	INV=107.28 (UD-4)
CO-5 CLEANOUT	TOP=109.19	INV=106.47 (UD-5) INV=106.47 (UD-4)
CO-6 CLEANOUT	TOP=108.37	INV=105.66 (UD-6) INV=105.66 (UD-5)

PROPOSED SEQUENCE OF CONSTRUCTION:

1. THE INSTALLATION OF ALL SEDIMENT AND EROSION CONTROL DEVICES THAT CAN BE PLACED PRIOR TO ANY MAJOR SOIL DISTURBANCES.
2. CLEAR AND REMOVE ALL EXISTING VEGETATION IN THOSE AREAS WHERE NECESSARY. ALL REMAINING VEGETATION IS TO BE PROPERLY PROTECTED AND IS TO REMAIN IN ITS NATURAL STATE. TOPSOIL IN AREAS TO BE DISTURBED IS TO BE STRIPPED TO A MINIMUM DEPTH OF SIX (6) INCHES AND STOCKPILED SEPARATELY FROM OTHER EXCAVATED SOIL(S)
3. THE IMMEDIATE INSTALLATION OF ALL REMAINING SEDIMENT AND EROSION CONTROL DEVICES.
4. PERFORM ALL DEMOLITION WORK.
5. CONSTRUCT ROUGH GRADING OF STORMWATER PONDS.
6. CONSTRUCT ALL UNDERGROUND UTILITIES AND STORM DRAIN SYSTEMS.
7. CONSTRUCT ROADS (SUBGRADE, CURB & GUTTER, BASE, PAVEMENT, SIDEWALKS AND LANDSCAPING).
8. UPON THE COMPLETION OF THE CONSTRUCTION ACTIVITIES, PROVIDE RESTORATION, FINE GRADE REMAINDER OF SITE, RESPREAD STOCKPILED TOPSOIL AND STABILIZE WITH PERMANENT VEGETATIVE COVER AND LANDSCAPING.
9. COMPLETE STORMWATER PONDS I.E. INSTALL UNDERDRAIN SYSTEM.
10. THE REMOVAL OF APPROPRIATE TEMPORARY SEDIMENT AND EROSION CONTROL DEVICES.

REBOL-BATTLE & ASSOCIATES
Civil Engineers and Surveyors
2301 N. Ninth Avenue, Suite 300
Pensacola, Florida 32503
Telephone: (850) 438-7500 Fax: (850) 438-0448
EB 0000567 LB7916

GRADING & DRAINAGE PLAN

BROOKHAVEN PHASE 4
A 193 LOT SUBDIVISION
PENSACOLA, FLORIDA

No.	DATE	REVISION

SEAL
NOT FOR CONSTRUCTION
PAUL A. BATTLE, P.E.
No. 53126
6/15/22
STATE OF FLORIDA
PAUL A. BATTLE, P.E.
No. 53126

Dr. By:
Ck By: PAB
Job No.: 2015.035 F
Date: 6/1/2022

DRAWING No.
C3.4

This drawing is the property of Rebol-Battle & Associates, and may not be reproduced without written permission.

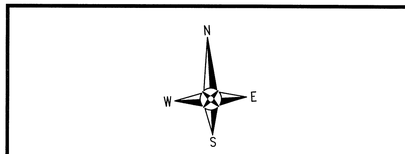

HORIZONTAL SCALE

40 0 20 40 80 160

(IN FEET)
1 INCH = 40 FT. (24"x36")
1 INCH = 80 FT. (12"x18")

PIPE TABLE			
Pipe Name	Length	Size	Slope
PD-70	245'	36" RCP	5.65%
PD-78	146'	18" RCP	0.68%
PD-545	260'	30" RCP	1.07%
PD-550	45'	18" RCP	2.69%
PD-555	280'	30" RCP	0.99%
PD-560	45'	18" RCP	2.67%
PD-565	210'	30" RCP	1.62%
PD-575	54'	30" RCP	0.49%

CURB INLET		
NAME & DESCRIPTION	ELEVATIONS	INVERTS
CI-550 TYPE 'A' CURB INLET	TOP=108.27 EOP=107.85 THROAT=107.44	INV=102.48 (PD-550) INV=105.00 (UD-3)
CI-555 TYPE 'A' CURB INLET	TOP=107.96 EOP=107.54 THROAT=107.13	INV=101.27 (PD-545) INV=101.27 (PD-555) INV=101.27 (PD-550) INV=104.79 (UD-7)
CI-560 TYPE 'A' CURB INLET	TOP=104.99 EOP=104.57 THROAT=104.16	INV=99.70 (PD-560)
CI-565 TYPE 'A' CURB INLET	TOP=104.60 EOP=104.18 THROAT=103.77	INV=98.50 (PD-555) INV=98.50 (PD-565) INV=98.50 (PD-560)
CI-570 TYPE DOUBLE 'A' CURB INLET	TOP=102.00 EOP=101.58 THROAT=101.17	INV=94.83 (PD-575) INV=94.83 (PD-70)
CI-575 TYPE DOUBLE 'A' CURB INLET	TOP=101.99 EOP=101.57 THROAT=101.16	INV=95.10 (PD-575) INV=95.10 (PD-565)

DROP INLETS		
NAME	TOP ELEVATION	INVERTS
DI-76 TYPE 'D' OUTFALL STRUCTURE W/ 10"Wx18"H SLOT INV=89.47' 2.75" BLEEDER ORIFICE INV=88.00'	90.97	INV=87.00 (PD-78)

MITERED END SECTIONS	
NAME	INVERT
MES-70	INV=81.00' (PD-70)
MES-78	INV=86.00' (PD-78)

ROADSIDE UNDERDRAIN CLEANOUT		
NAME & DESCRIPTION	ELEVATIONS	INVERTS
CO-7 CLEANOUT	TOP=107.58	INV=104.86 (UD-7) INV=104.86 (UD-6)

UNDERDRAIN PIPE TABLE			
Pipe Name	Length	Size	Slope
UD-3	76'	12" HDPE PERFORATED	1.00%
UD-6	80'	12" HDPE PERFORATED	1.00%
UD-7	7'	12" HDPE PERFORATED	1.00%

ESCAMBIA COUNTY SPECIAL NOTE:
CONSTRUCTION PLAN APPROVAL IS REQUIRED TO DOCUMENT THE DESIGN OF INFRASTRUCTURE TO ADEQUATELY SERVE THE CREATED LOTS. THE APPROVAL ALLOWS THE CONSTRUCTION OF THE SUBDIVISION INFRASTRUCTURE AREAS ONLY, AS SPECIFICALLY DESIGNATED, TO PROCEED BUT IT DOES NOT ALLOW DEVELOPMENT ON THE INDIVIDUAL SUBDIVISION LOTS. NEITHER PRELIMINARY PLAT OR CONSTRUCTION PLAN ALLOW LAND CLEARING/ LAND DISTURBANCE ACTIVITIES AND DEVELOPMENT ON THE INDIVIDUAL SUBDIVISION LOTS AS BUILDING PERMITS FOR THE DWELLINGS WILL BE REQUIRED FOR THESE ACTIVITIES PRIOR, ON EACH LOT/PARCEL IN THE FUTURE.

SWALE NOTE:
1. 15' PUBLIC DRAINAGE/ACCESS EASEMENT SWALES ARE TO BE BUILT BY THE SITE CONTRACTOR.
2. 10' PRIVATE DRAINAGE EASEMENT SWALES (BETWEEN LOTS) ARE TO BE BUILT BY HOMEBUILDER

ENVIRONMENTAL NOTES:
1. ALL VEGETATIVE NATURAL BUFFERS SHALL REMAIN IN NATURAL VEGETATIVE STATE THROUGHOUT THE PROPERTY. THE VNB'S ARE USED TO TREAT THE REAR LOTS FOR STORM WATER TREATMENT.
2. ALL REMAINING WETLANDS & WETLAND BUFFERS, VEGETATIVE NATURAL BUFFERS AND CONSERVATION EASEMENTS SHALL REMAIN UNDISTURBED IN NATURAL VEGETATIVE STATE.

CONSTRUCT GRASS SWALE SEE DETAILS

15' PUBLIC DRAINAGE/ ACCESS EASEMENT

5' PRIVATE DRAINAGE EASEMENT TYPICAL OF ALL

CONSTRUCT CONCRETE SWALE SEE DETAILS

15' PUBLIC DRAINAGE/ ACCESS EASEMENT

CROSSVINE RD 50' PUBLIC R/W

BLOCK A

5' PRIVATE DRAINAGE EASEMENT TYPICAL OF ALL

20' PUBLIC DRAINAGE/ACCESS EASEMENT

INSTALL NO WATER RECREATION SIGNS (NO SWIMMING, NO FISHING AND NO BOATING) AT 50' APART AROUND STORMWATER POND. SEE SHEET C3.7 FOR DETAILS

CONSTRUCT STORMWATER POND SEE DETAILS

CONSTRUCT EMERGENCY OVERFLOW WEIR W/ RIPRAP INV=92.50 SEE DETAILS

PARCEL A
WET STORMWATER POND
PUBLIC
3.89 ACRES

PARCEL B
WETLANDS & WETLAND BUFFERS
PRIVATE
1.27 ACRES

VEGETATED NATURAL BUFFER
0.53 ACRES

ACOE, NWFWMD & ESCO JURISDICTIONAL WETLAND LINE DELINEATED BY BIOME CONSULTING GROUP ON NOVEMBER 6, 2020

PROPOSED SEQUENCE OF CONSTRUCTION:
1. THE INSTALLATION OF ALL SEDIMENT AND EROSION CONTROL DEVICES THAT CAN BE PLACED PRIOR TO ANY MAJOR SOIL DISTURBANCES.
2. CLEAR AND REMOVE ALL EXISTING VEGETATION IN THOSE AREAS WHERE NECESSARY. ALL REMAINING VEGETATION IS TO BE PROPERLY PROTECTED AND IS TO REMAIN IN ITS NATURAL STATE. TOPSOIL IN AREAS TO BE DISTURBED IS TO BE STRIPPED TO A MINIMUM DEPTH OF SIX (6) INCHES AND STOCKPILED SEPARATELY FROM OTHER EXCAVATED SOIL(S)
3. THE IMMEDIATE INSTALLATION OF ALL REMAINING SEDIMENT AND EROSION CONTROL DEVICES.
4. PERFORM ALL DEMOLITION WORK.
5. CONSTRUCT ROUGH GRADING OF STORMWATER PONDS.
6. CONSTRUCT ALL UNDERGROUND UTILITIES AND STORM DRAIN SYSTEMS.
7. CONSTRUCT ROADS (SUBGRADE, CURB & GUTTER, BASE, PAVEMENT, SIDEWALKS AND LANDSCAPING).
8. UPON THE COMPLETION OF THE CONSTRUCTION ACTIVITIES, PROVIDE RESTORATION, FINE GRADE REMAINDER OF SITE, RESPREAD STOCKPILED TOPSOIL AND STABILIZE WITH PERMANENT VEGETATIVE COVER AND LANDSCAPING.
9. COMPLETE STORMWATER PONDS I.E. INSTALL UNDERDRAIN SYSTEM.
10. THE REMOVAL OF APPROPRIATE TEMPORARY SEDIMENT AND EROSION CONTROL DEVICES.

REBOL-BATTLE & ASSOCIATES
Civil Engineers and Surveyors
2301 N. Ninth Avenue, Suite 300
Pensacola, Florida 32503
Telephone: 850.438.4480 Fax: 850.438.0448
EB 00009857 LB7916

GRADING & DRAINAGE PLAN

BROOKHAVEN PHASE 4
A 193 LOT SUBDIVISION
PENSACOLA, FLORIDA

No.	DATE	REVISION

SEAL
NOT FOR CONSTRUCTION
PAUL A. BATTLE, P.E. LICENSE No. 53128
6/15/22
STATE OF FLORIDA
PAUL A. BATTLE, P.E. No.53128

Dr. By:
Ck By: PAB
Job No.: 2015.035 F
Date: 6/1/2022

DRAWING No.
C3.5

This drawing is the property of Rebol-Battle & Associates and may not be reproduced without written permission.

DRAWINGS SAVED BY: BROOKHAVEN PHASE 4 DRAWINGS\C3.5 GRADING PLAN.DWG

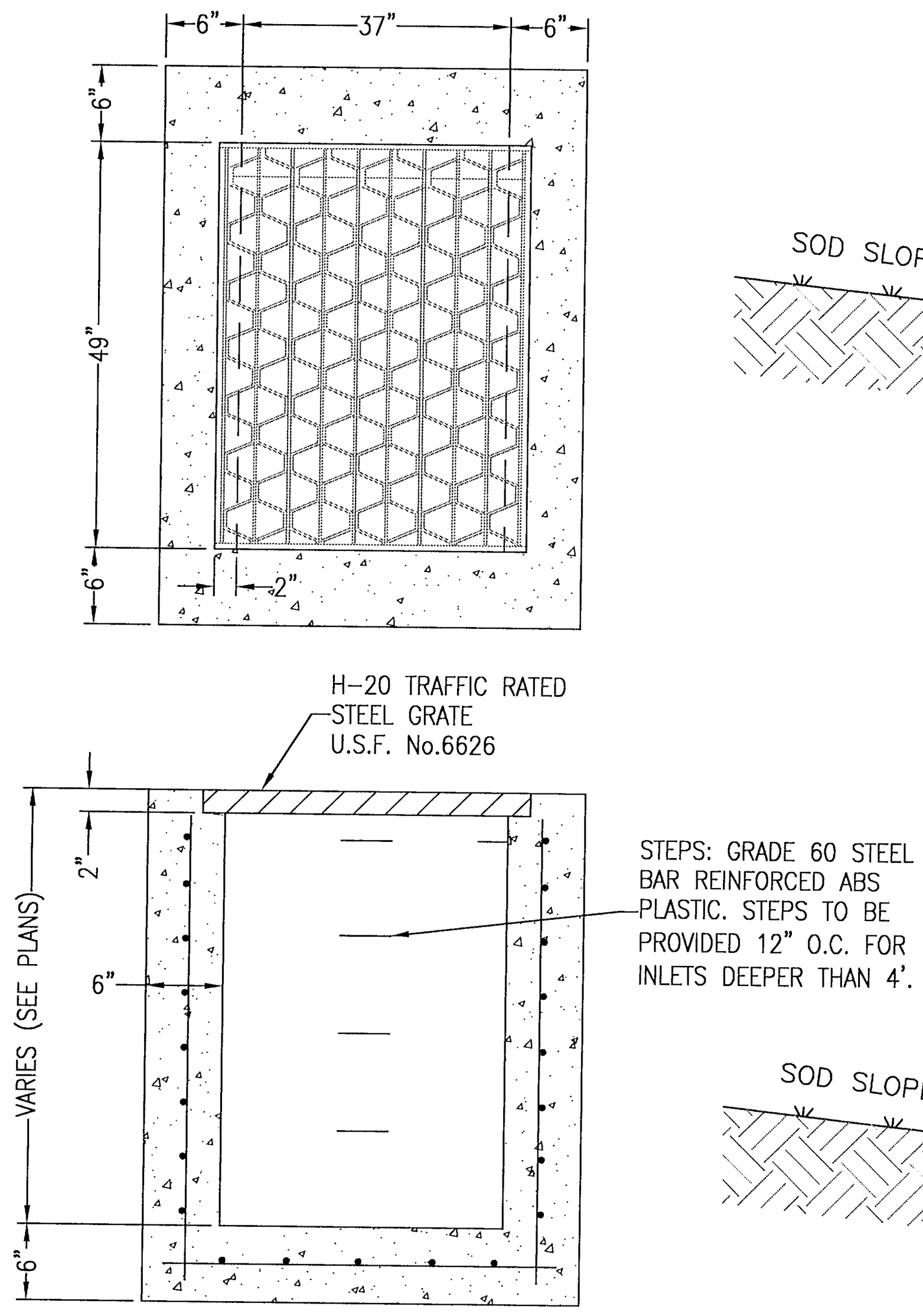

FDOT TYPE 'D' INLET

N.T.S.

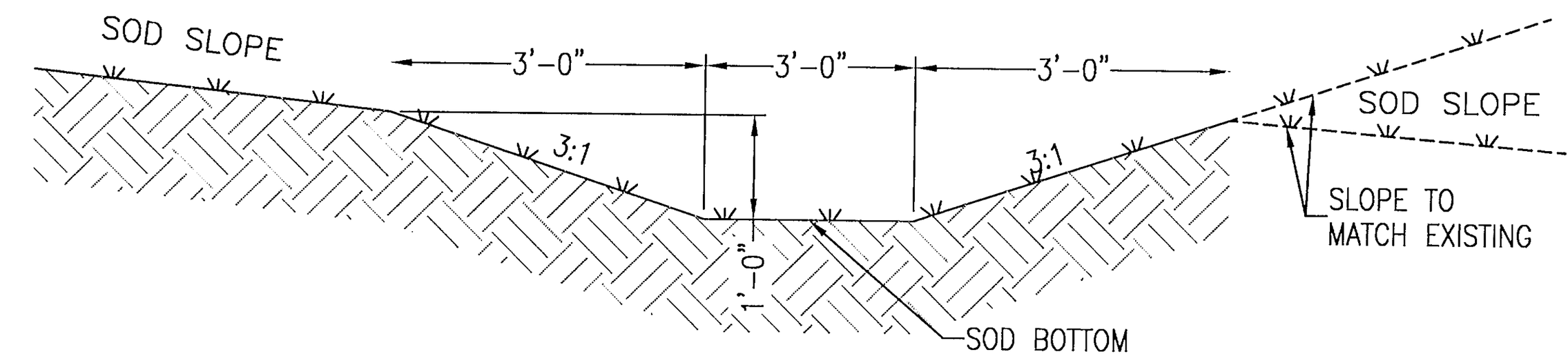

GRASS SWALE DETAIL IN PUBLIC DRAINAGE/ ACCESS EASEMENT

SCALE: NTS

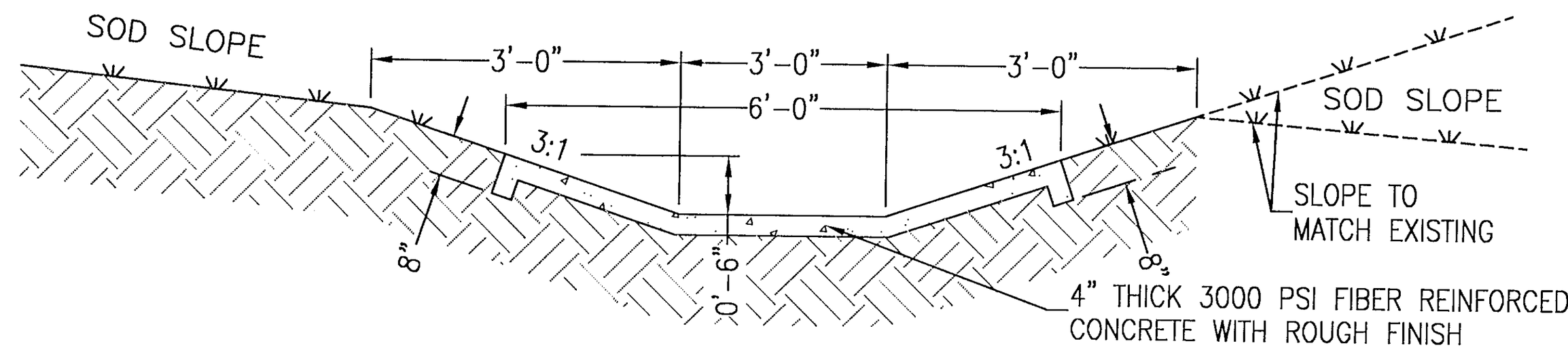

CONCRETE SWALE DETAIL IN PUBLIC DRAINAGE/ ACCESS EASEMENT BLOCK A, LOTS 19, 20 & 21

SCALE: NTS

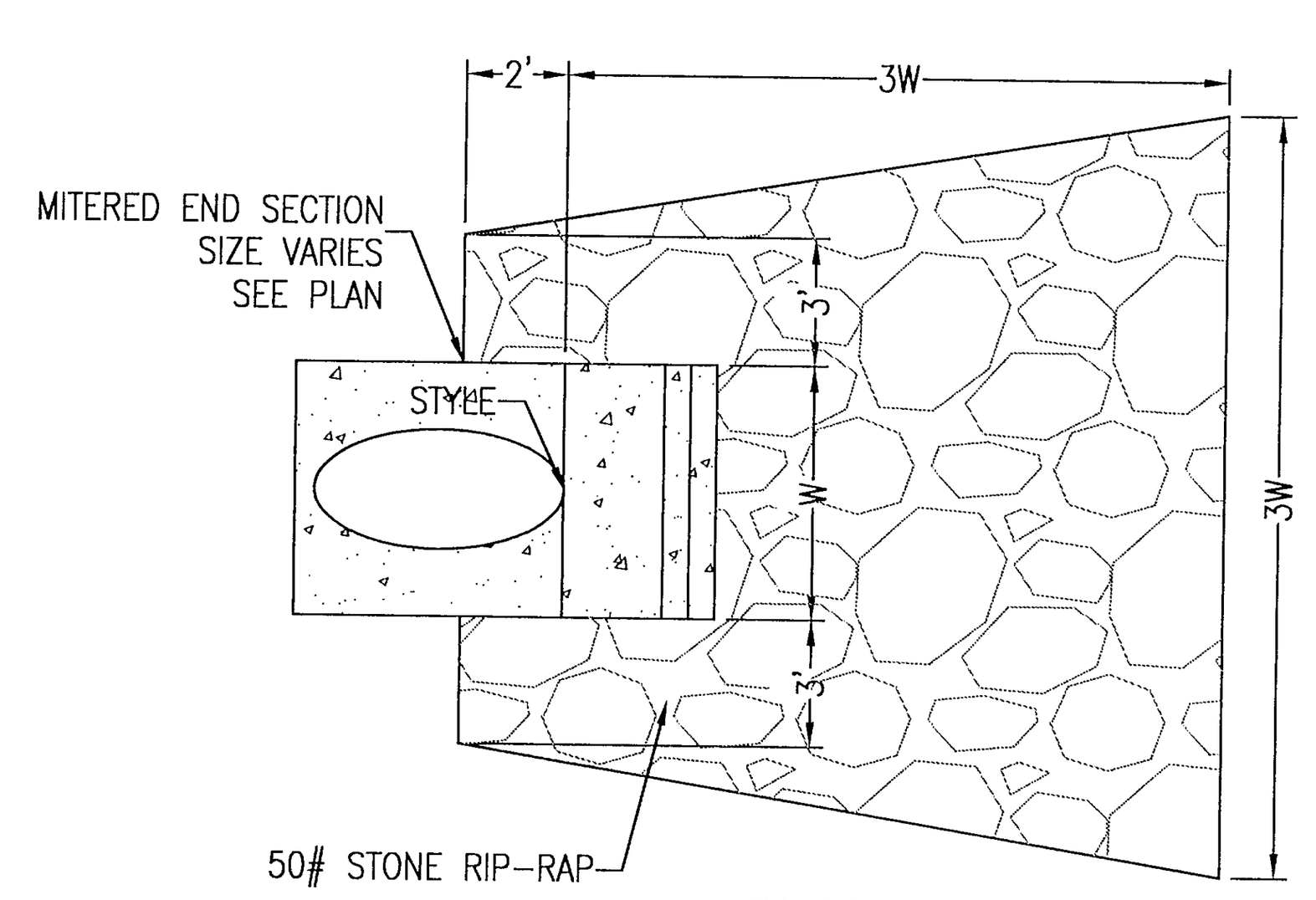

PLAN

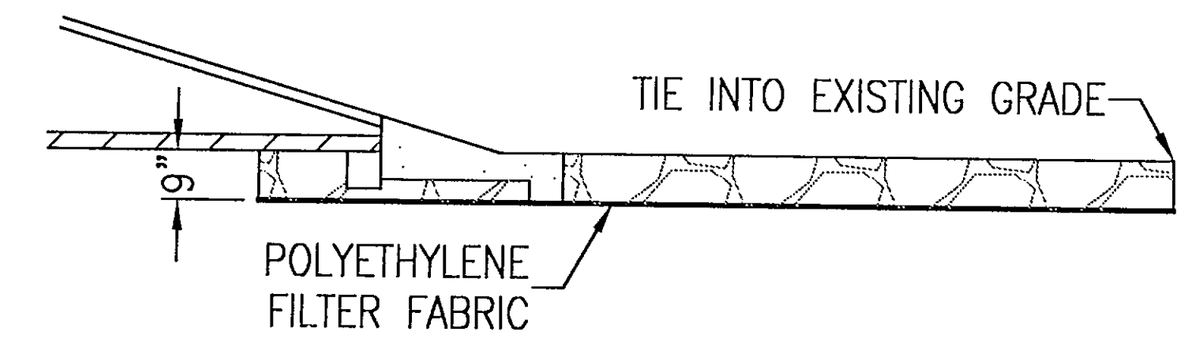

SECTION

RIP-RAP DETAIL

N.T.S.

NOTES:

1. MANHOLE SHALL CONFORM TO A.S.T.M. C 478 SPECIFICATIONS WITH 4000 PSI CONCRETE.
2. DIAMETER OF OPENING FOR PIPE SHALL BE 1" LARGER DIAMETER THAN BELL OF THE PIPE BEING USED.
3. JOINTING COMPOUND SHALL BE RAM NECK, TYPE 1, ROPE FORM PLASTIC GASKET OR EQUAL.
4. ALL PATCHING TO BE DONE WITH HYDRAULIC CEMENT. NO MORTAR REPAIRS PERMITTED.
5. CONCRETE TO BE 2500 P.S.I., REINFORCING STEEL TO BE A.S.T.M. A 615 GRADE 60 OR PROVIDE PRE-CAST MANHOLE BASE SECTION IN CONFORMANCE WITH ASTMA C-478.
6. CAST IN PLACE MANHOLE MAY BE ALLOWED IN PRE-APPROVED LOCATIONS.

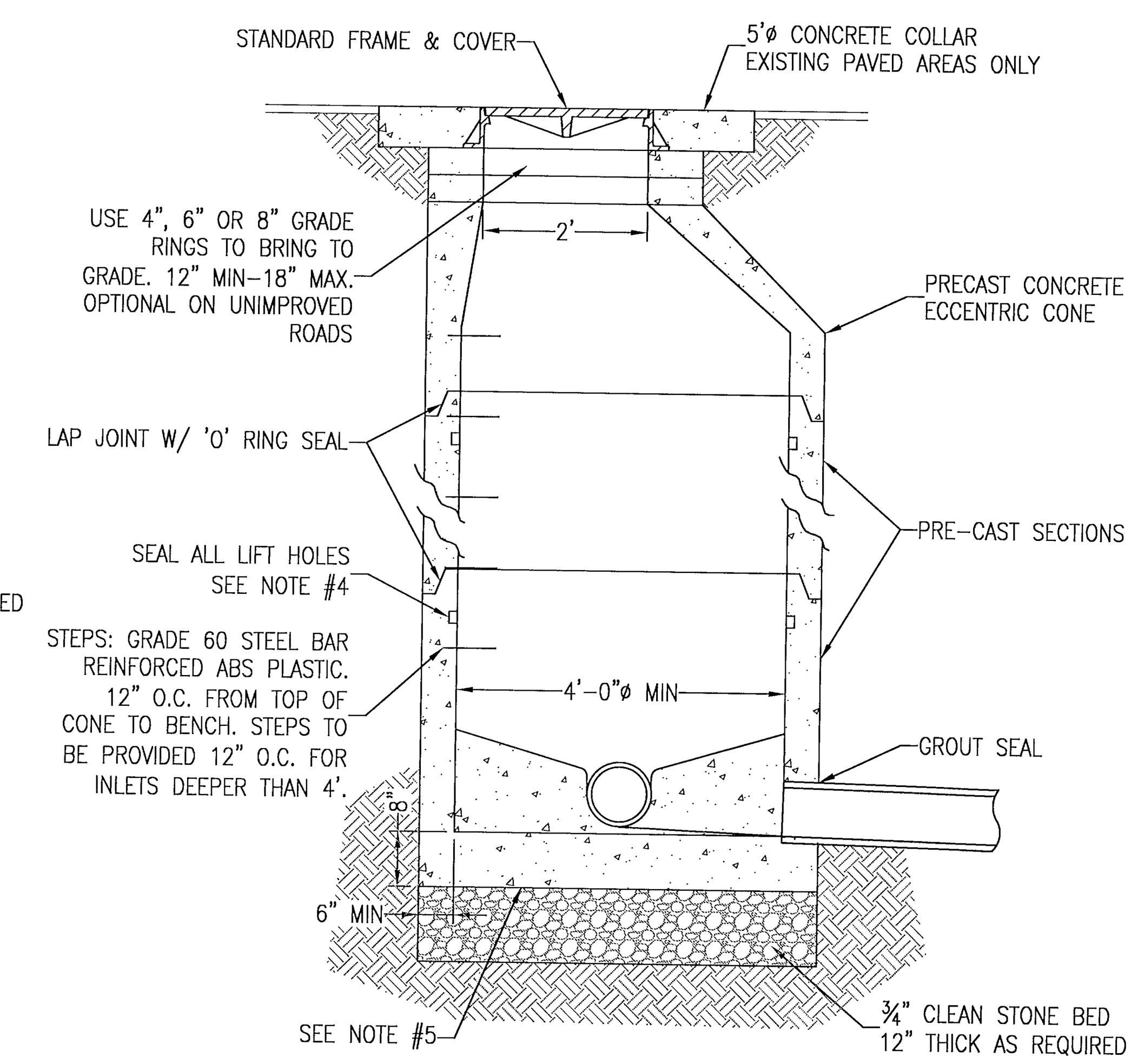

STORMWATER MANHOLE DETAIL

N.T.S.

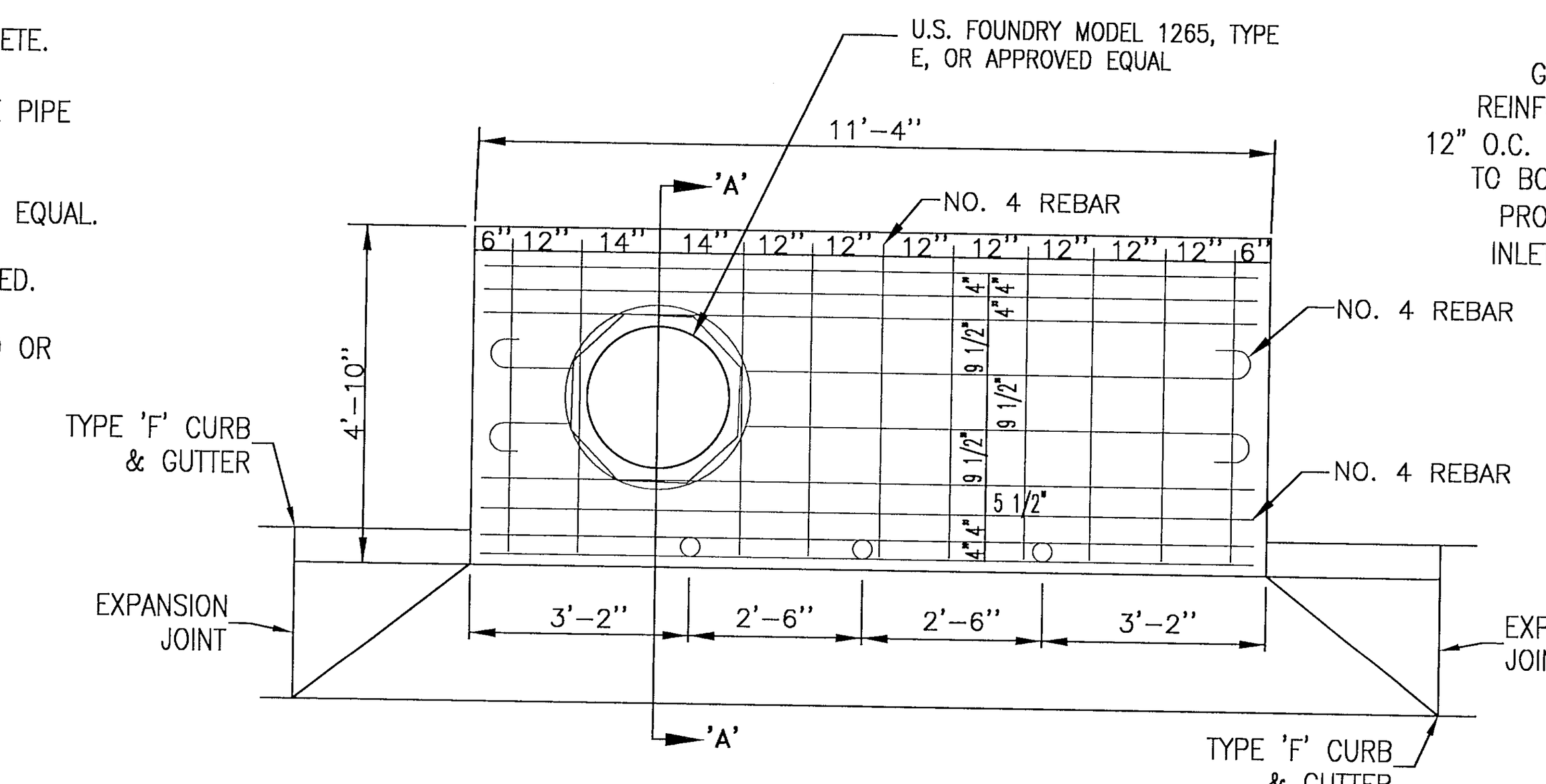

PLAN VIEW TYPE "A" CURB INLET DETAIL

N.T.S

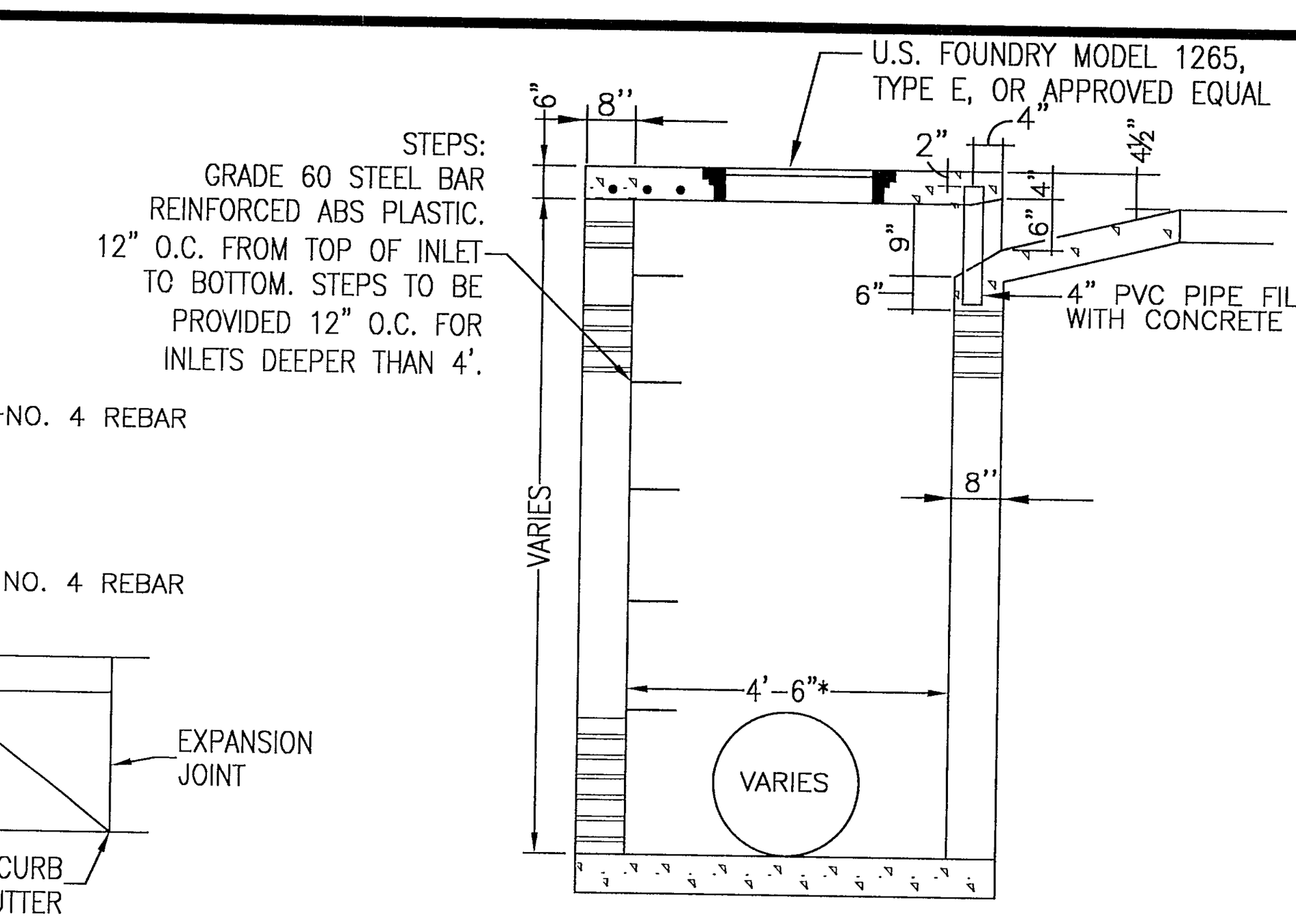

SECTION A-A TYPE "A" CURB INLET DETAIL

N.T.S

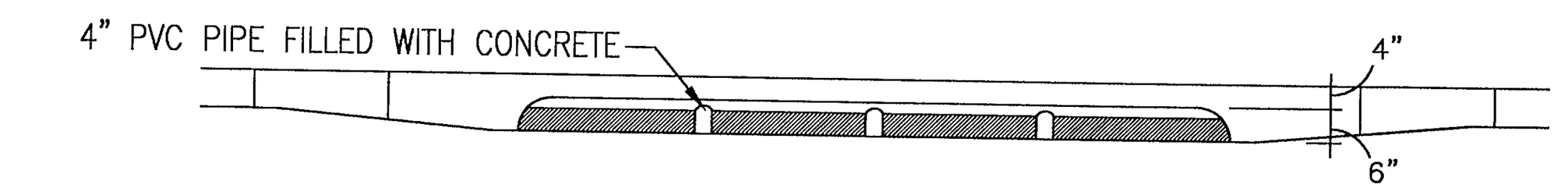

TYPE "A" INLET THROAT ELEVATION

N.T.S

NOTE: WHEN INLETS ARE TO BE CONSTRUCTED ON A CURVE, REFER TO PLANS TO DETERMINE RADIUS & WHERE NECESSARY, MODIFY INLET DETAILS ACCORDINGLY. BEND STEEL WHEN NECESSARY TO MAINTAIN MINIMUM COVER.

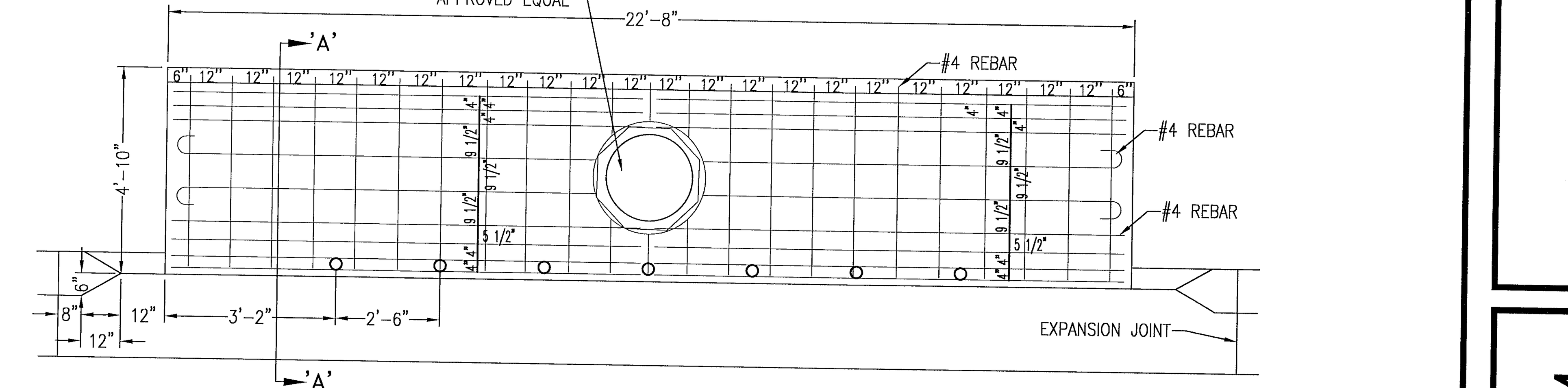

TYPE 'A' INLET (DUAL) PLAN VIEW

N.T.S.

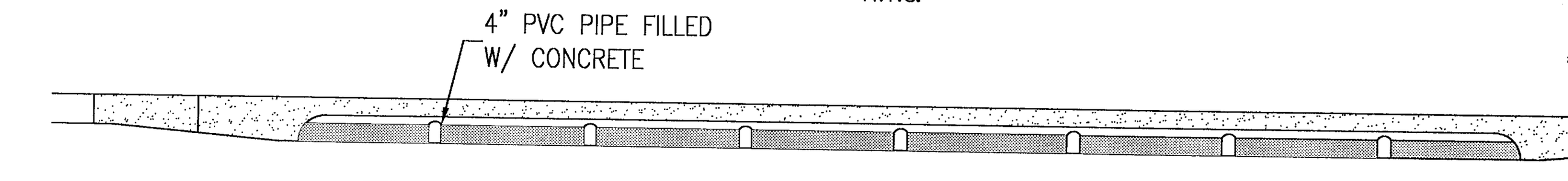

TYPE 'A' INLET (DUAL) THROAT ELEVATION

N.T.S.

									DIMENSIONS AND QUANTITIES													
	D	X	A	B	C	E	F	G	H ■	M Single Pipe	M Double Pipe	M Triple Pipe	M Quad. Pipe	N	5½" CONCRETE SLAB (CY) ◪ Single Pipe	Double Pipe	Triple Pipe	Quad. Pipe	SODDING (SY) Single Pipe	Double Pipe	Triple Pipe	Quad. Pipe
1:2 Slope	15"	2'-7"	1.92'	2.18'	4.10'	2.06'	5'	1.22'	2.9'	4.63'	7.21'	9.79'	12.37'	1.19'	0.38	0.58	0.77	0.96	21	24	27	30
	18"	2'-10"	1.97'	2.74'	4.71'	2.56'	6'	1.41'	3.4'	4.92'	7.75'	10.58'	13.42'	1.21'	0.44	0.65	0.87	1.09	22	25	28	31
	24"	3'-5"	2.06'	3.85'	5.91'	3.56'	7'	1.73'	3.4'	5.50'	8.92'	12.33'	15.75'	1.25'	0.54	0.83	1.12	1.42	24	28	32	35
	30"	4'-3"	2.15'	4.95'	7.10'	4.56'	8'	2.00'	3.4'	6.08'	10.33'	14.58'	18.83'	1.29'	0.66	1.09	1.50	1.91	26	31	35	40
	36"	5'-1"	2.25'	6.08'	8.33'	5.56'	9'	2.24'	3.4'	6.67'	11.75'	16.83'	21.92'	1.33'	0.81	1.38	1.95	2.51	28	34	39	45
	42"	6'-0"	2.34'	7.21'	9.55'	6.56'	10'	2.45'	3.4'	7.25'	13.25'	19.25'	25.25'	1.38'	0.97	1.70	2.45	3.19	30	37	43	50
	48"	6'-9"	2.43'	8.33'	10.76'	7.56'	11'	2.65'	3.4'	7.83'	14.58'	21.33'	28.08'	1.42'	1.13	2.04	2.93	3.84	32	39	47	54
	54"	7'-8"	2.52'	9.44'	11.96'	8.56'	12'	2.83'	3.4'	8.42'	16.08'	23.75'	31.42'	1.46'	1.31	2.44	3.58	4.72	34	42	51	59
	60"	8'-6"	2.62'	10.56'	13.18'	9.56'	14'	3.00'	4.4'	9.00'	17.50'	26.00'	34.50'	1.50'	1.51	2.89	4.28	5.68	36	45	55	64
	66"	9'-2"	2.71'	11.68'	14.39'	10.56'	15'	3.18'	4.4'	9.58'	18.75'	27.92'	37.08'	1.54'	1.68	3.25	4.84	6.43	38	48	58	68
	72"	10'-0"	2.80'	12.80'	15.60'	11.56'	16'	3.30'	4.4'	10.16'	20.16'	30.16'	40.16'	1.58'	1.89	3.74	5.59	7.45	40	51	62	73
1:4 Slope	15"	2'-7"	2.27'	4.09'	6.36'	4.03'	8'	1.22'	4.0'	4.63'	7.21'	9.79'	12.37'	1.19'	0.57	0.87	1.15	1.44	23	26	29	32
	18"	2'-10"	2.36'	5.12'	7.48'	5.03'	9'	1.41'	4.0'	4.92'	7.75'	10.58'	13.42'	1.21'	0.66	0.99	1.31	1.65	25	28	31	35
	24"	3'-5"	2.53'	7.18' △	9.71'	7.03' △	11'	1.73'	4.0'	5.50'	8.92'	12.33'	15.75'	1.25'	0.85	1.30	1.75	2.20	28	32	36	40
	30"	4'-3"	2.70'	9.25'	11.95'	9.03'	13'	2.00'	4.0'	6.08'	10.33'	14.58'	18.83'	1.29'	1.10	1.74	2.39	3.05	31	36	41	46
	36"	5'-1"	2.87'	11.31' ◇	14.18'	11.03' ◇	15'	2.24'	4.0'	6.67'	11.75'	16.83'	21.92'	1.33'	1.32	2.21	3.08	3.96	34	40	46	52
	42"	6'-0"	3.05'	13.37'	16.42'	13.03'	17'	2.45'	4.0'	7.25'	13.25'	19.25'	25.25'	1.38'	1.58	2.76	3.91	5.09	38	44	51	58
	48"	6'-9"	3.22'	15.43'	18.65'	15.03'	19'	2.65'	4.0'	7.83'	14.58'	21.33'	28.08'	1.42'	1.85	3.30	4.73	6.17	41	48	56	63
	54"	7'-8"	3.39'	17.49'	20.88'	17.03'	21'	2.83'	4.0'	8.42'	16.08'	23.75'	31.42'	1.46'	2.14	3.95	5.77	7.58	44	52	61	69
	60"	8'-6"	3.56'	19.55'	23.11'	19.03'	23'	3.00'	4.0'	9.00'	17.50'	26.00'	34.50'	1.50'	2.45	4.66	6.87	9.07	47	56	66	75
	66"	9'-2"	3.73'	21.62'	25.35'	21.03'	25'	3.18'	4.0'	9.58'	18.75'	27.92'	37.08'	1.54'	2.88	5.54	8.18	10.84	49	59	69	80
	72"	10'-0"	3.91'	23.68'	27.59'	23.03'	27'	3.30'	4.0'	10.16'	20.16'	30.16'	40.16'	1.58'	3.54	6.61	9.87	13.13	52	63	74	85

◪ See General Note No. 5. See Sheet 5 For 3" Slab Quantities

■ Values shown for estimating pipe quantities and are for information only.

B	E	
△ 6.42'	△ 6.25'	Dimensions permitted to allow use of 8' standard pipe lengths.
◇ 10.40'	◇ 10.10'	Dimensions permitted to allow use of 12' standard pipe lengths.

△ ◇ Concrete slab shall be deepened to form bridge across crown of pipe. See section below.

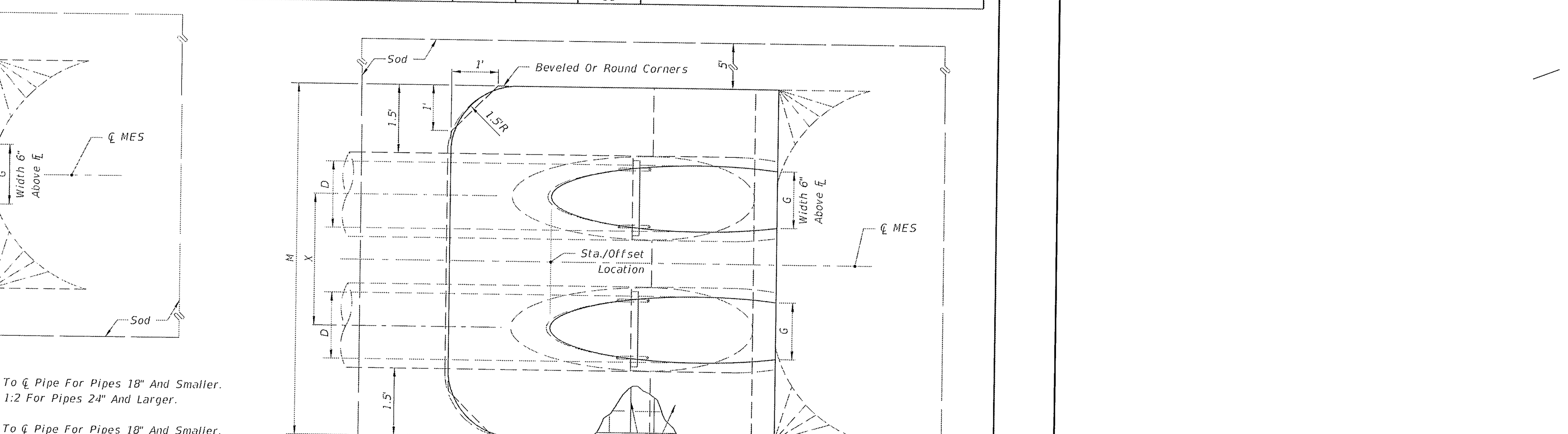

TOP-VIEW SINGLE PIPE

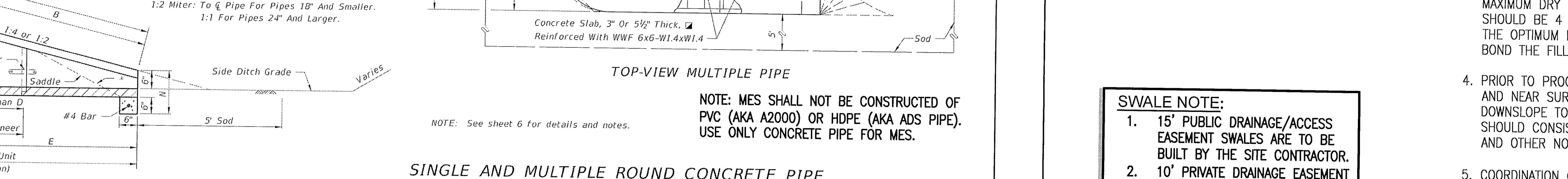

SECTION

*Slope: 1:4 Miter: To ℄ Pipe For Pipes 18" And Smaller. 1:2 For Pipes 24" And Larger.

1:2 Miter: To ℄ Pipe For Pipes 18" And Smaller. 1:1 For Pipes 24" And Larger.

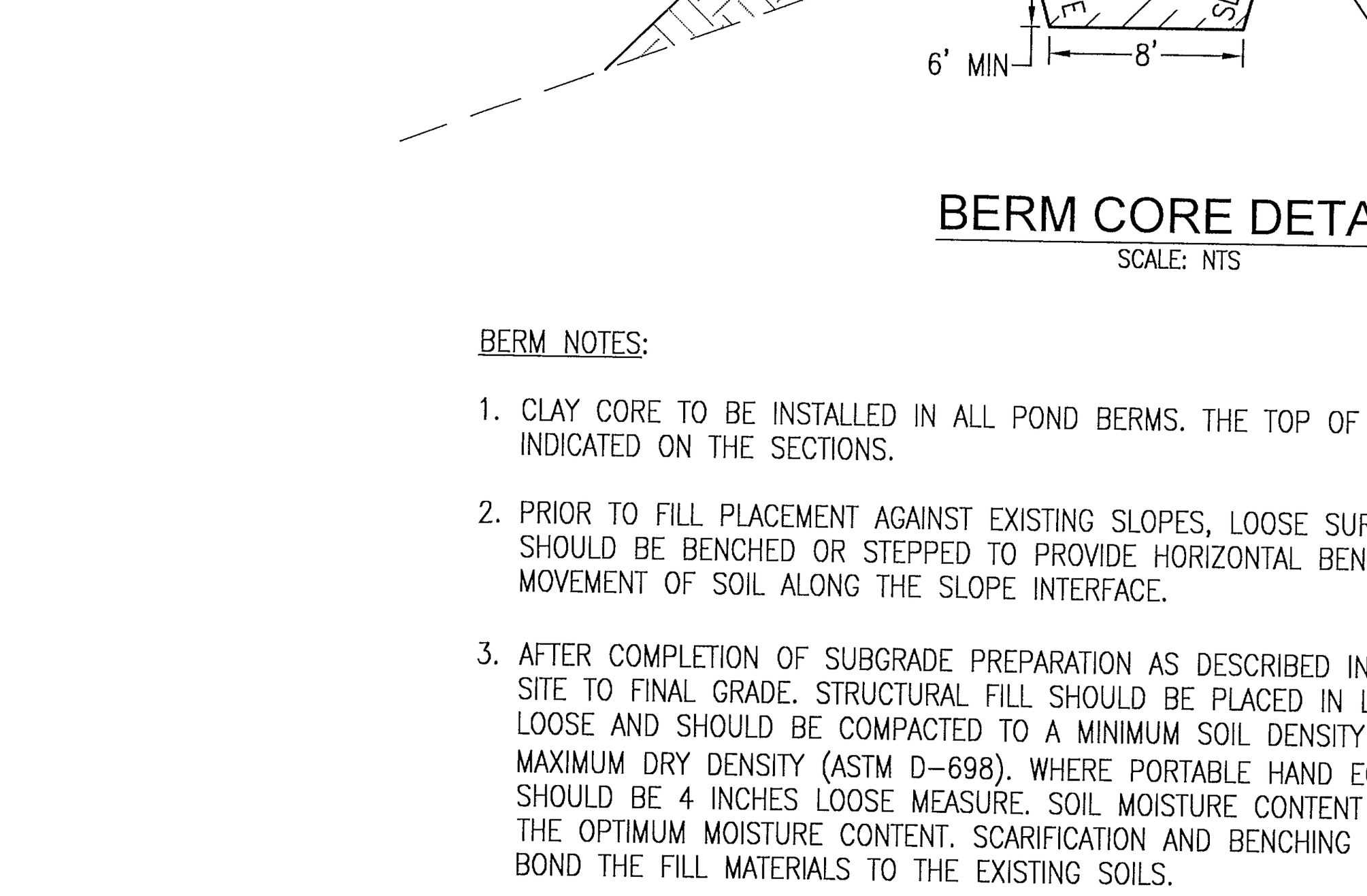

TOP-VIEW MULTIPLE PIPE

NOTE: See sheet 6 for details and notes.

NOTE: MES SHALL NOT BE CONSTRUCTED OF PVC (AKA A2000) OR HDPE (AKA ADS PIPE). USE ONLY CONCRETE PIPE FOR MES.

SINGLE AND MULTIPLE ROUND CONCRETE PIPE

LAST REVISION 11/01/16	REVISION	DESCRIPTION:	FDOT FY 2017-18 DESIGN STANDARDS	CROSS DRAIN MITERED END SECTION	INDEX NO. 272	SHEET NO. 1 of 6

P:\2015\2015.035 (F) - BROOKHAVEN PHASE 4\DRAWINGS\C3.0 GRADING PLAN.DWG 10/25/2016 8:26:11 AM

BERM OUTER LAYER SOIL DESCRIPTION:
OUTER LAYER OF BERM SHALL CONSIST OF A WELL- OR POORLY-GRADED SAND (USCS CLASSIFICATION OF SW OR SP), FREE OF NON-SOIL MATERIALS AND ROCK FRAGMENTS LARGER THAN 3 INCHES IN DIAMETER, AND LESS THAN 3% FIBROUS ORGANIC MATERIALS BY WEIGHT. SOILS SHALL HAVE A STANDARD PROCTOR MAXIMUM DRY DENSITY OF 95 PCF OR HIGHER.

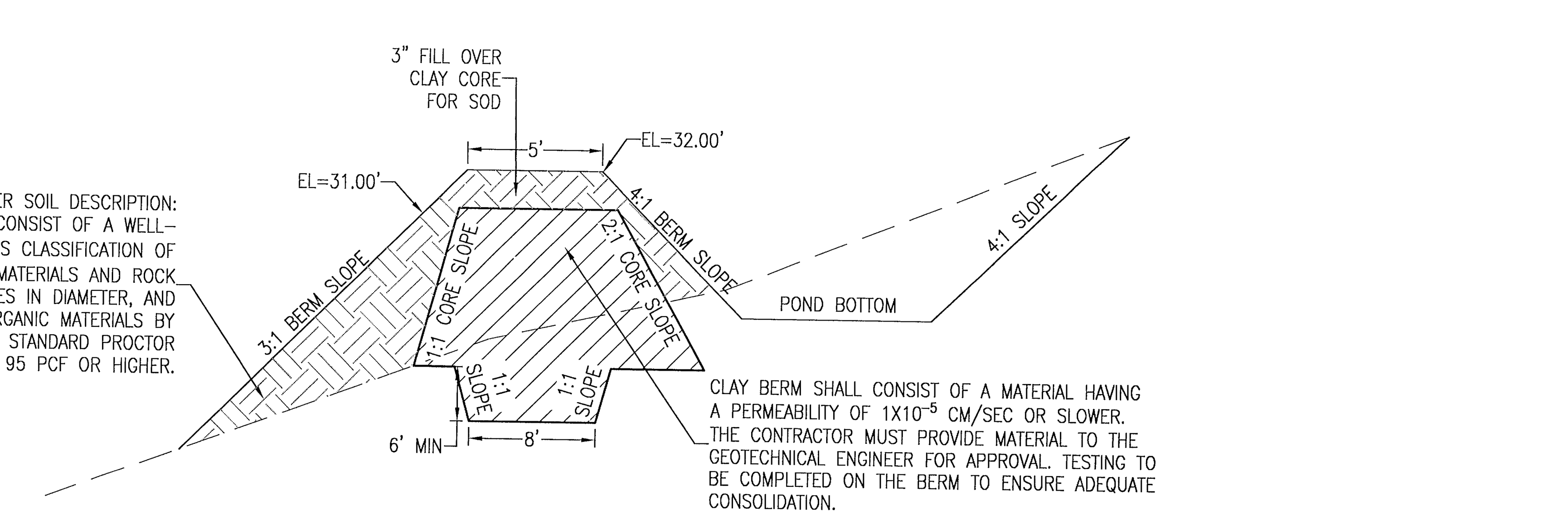

CLAY BERM SHALL CONSIST OF A MATERIAL HAVING A PERMEABILITY OF $1X10^{-5}$ CM/SEC OR SLOWER. THE CONTRACTOR MUST PROVIDE MATERIAL TO THE GEOTECHNICAL ENGINEER FOR APPROVAL. TESTING TO BE COMPLETED ON THE BERM TO ENSURE ADEQUATE CONSOLIDATION.

BERM CORE DETAIL

SCALE: NTS

SWALE NOTE:

1. 15' PUBLIC DRAINAGE/ACCESS EASEMENT SWALES ARE TO BE BUILT BY THE SITE CONTRACTOR.
2. 10' PRIVATE DRAINAGE EASEMENT SWALES (BETWEEN LOTS) ARE TO BE BUILT BY HOMEBUILDER

BERM NOTES:

1. CLAY CORE TO BE INSTALLED IN ALL POND BERMS. THE TOP OF THE CORE SHALL EXTEND TO THE TOP ELEVATION INDICATED ON THE SECTIONS.
2. PRIOR TO FILL PLACEMENT AGAINST EXISTING SLOPES, LOOSE SURFICIAL MATERIALS SHOULD BE REMOVED, AND THE SLOPE SHOULD BE BENCHED OR STEPPED TO PROVIDE HORIZONTAL BENCHES FOR COMPACTION, AND TO REDUCE THE POSSIBLE MOVEMENT OF SOIL ALONG THE SLOPE INTERFACE.
3. AFTER COMPLETION OF SUBGRADE PREPARATION AS DESCRIBED IN #2, STRUCTURAL FILL CAN BE PLACED TO BRING THE SITE TO FINAL GRADE. STRUCTURAL FILL SHOULD BE PLACED IN LAYERS NOT EXCEEDING 8 INCHES IN THICKNESS WHEN LOOSE AND SHOULD BE COMPACTED TO A MINIMUM SOIL DENSITY OF AT LEAST 95 PERCENT OF THE STANDARD PROCTOR MAXIMUM DRY DENSITY (ASTM D-698). WHERE PORTABLE HAND EQUIPMENT IS REQUIRED, MAXIMUM LIFT THICKNESS SHOULD BE 4 INCHES LOOSE MEASURE. SOIL MOISTURE CONTENT SHOULD BE MAINTAINED WITHIN -2 TO +3 PERCENT OF THE OPTIMUM MOISTURE CONTENT. SCARIFICATION AND BENCHING OF FILL MATERIALS COULD BE REQUIRED TO ADEQUATELY BOND THE FILL MATERIALS TO THE EXISTING SOILS.
4. PRIOR TO PROCEEDING WITH CONSTRUCTION OPERATIONS, THE ENTIRE DAM FOOTPRINT SHOULD BE STRIPPED OF SURFACE AND NEAR SURFACE DEBRIS. IT IS RECOMMENDED THAT CLEARING AND STRIPPING OPERATIONS EXTEND BEYOND THE DOWNSLOPE TOE OF THE NEW DAM SECTION, IF ADJACENT WETLANDS DO NOT LIMIT CONSTRUCTION. THIS OPERATION SHOULD CONSIST OF COMPLETE REMOVAL AND WASTING OF TREES, TOPSOIL, ROOT SYSTEMS, LOOSE SEDIMENT DEPOSITS, AND OTHER NON-SOIL MATERIALS.
5. COORDINATION OF THE SITE AND SUBGRADE PREPARATION WITH THE GEOTECHNICAL ENGINEER DURING BERM CONSTRUCTION IS REQUIRED. THE GEOTECHNICAL ENGINEER WILL MAKE FIELD DECISIONS SHOULD PROBLEMS ARISE IN SPECIFIC AREAS CONCERNING UNDERCUTTING, GROUNDWATER CONTROL, SUBGRADE STABILIZATION AND OTHER REMEDIAL TECHNIQUES. ALL SUBGRADE AREAS SHOULD BE APPROVED BY THE GEOTECHNICAL ENGINEER PRIOR TO FILL PLACEMENT.

RBA
REBOL-BATTLE & ASSOCIATES
Civil Engineers and Surveyors
2301 N. Ninth Avenue, Suite 300
Pensacola, Florida 32503
Telephone 850.438.0400 Fax 850.438.0448
EB 00009657 LB7916

GRADING & DRAINAGE PLAN

BROOKHAVEN PHASE 4

A 193 LOT SUBDIVISION
PENSACOLA, FLORIDA

No.	DATE	REVISION

SEAL
NOT FOR CONSTRUCTION
PAUL A. BATTLE LICENSE No. 53126 STATE OF FLORIDA PROFESSIONAL ENGINEER
6/15/22
PAUL A. BATTLE, P.E.
No.53126

Dr. By:
Ck By: PAB
Job No.: 2015.035 F
Date: 6/1/2022

DRAWING No.
C3.6

This drawing is the property of Rebol-Battle & Associates, and may not be reproduced without written permission.

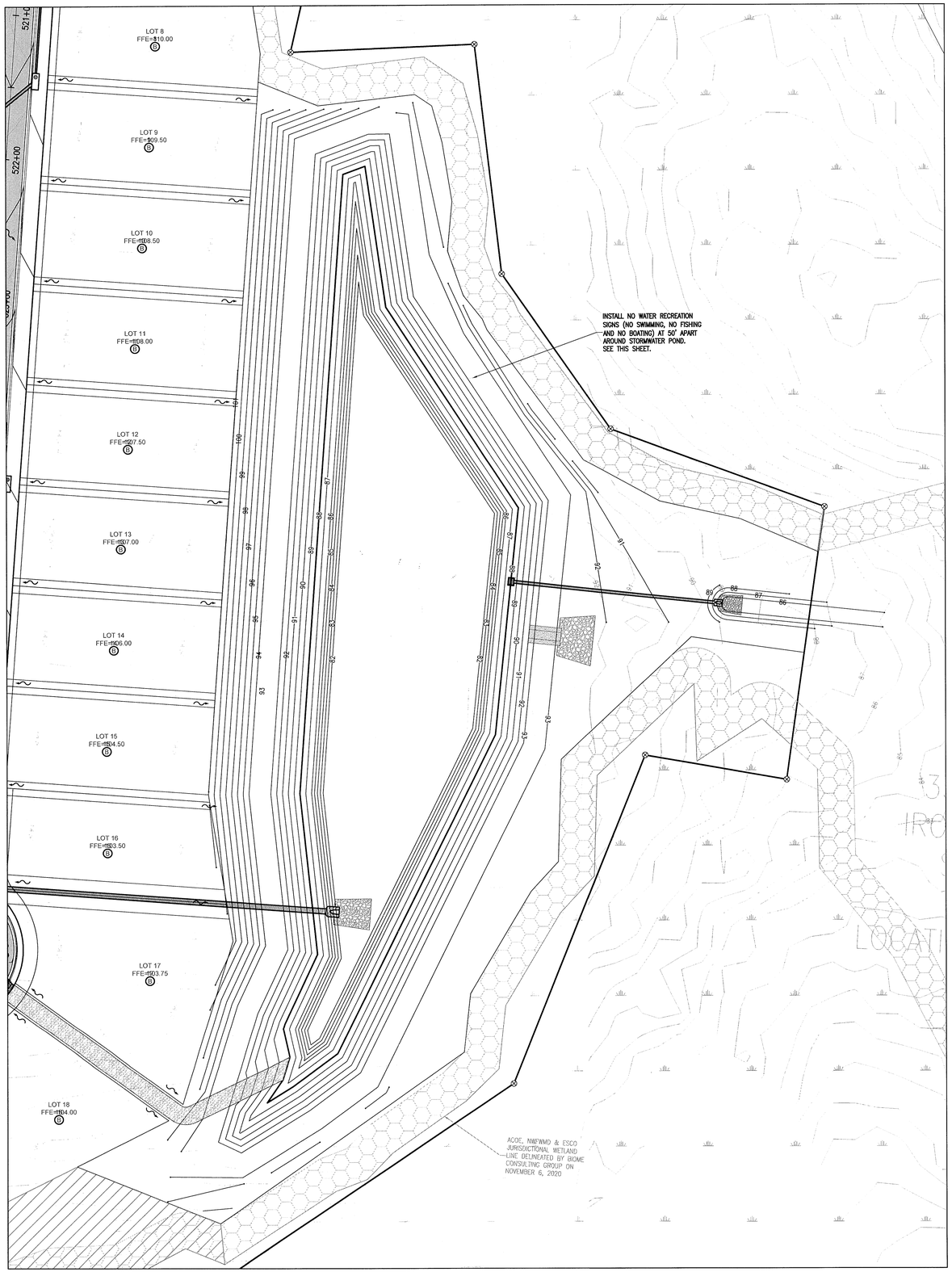

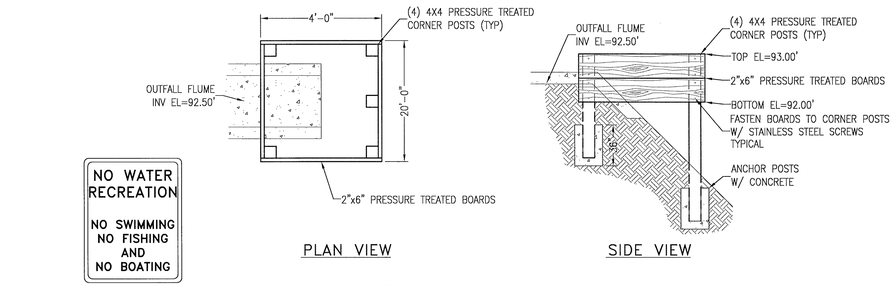

OUTFALL / SKIMMER DETAIL
N.T.S.

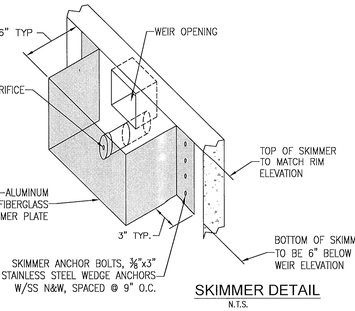

NO WATER RECREATION
2'-0" x 2'-6"
N.T.S.

SKIMMER DETAIL
N.T.S.

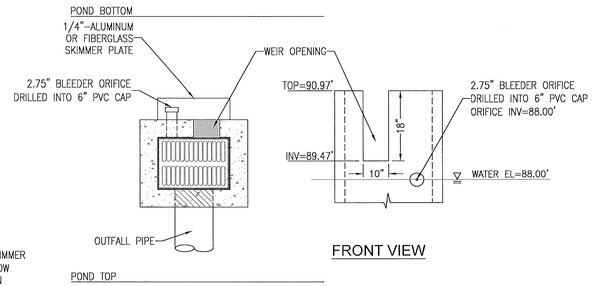

PLAN VIEW

FRONT VIEW

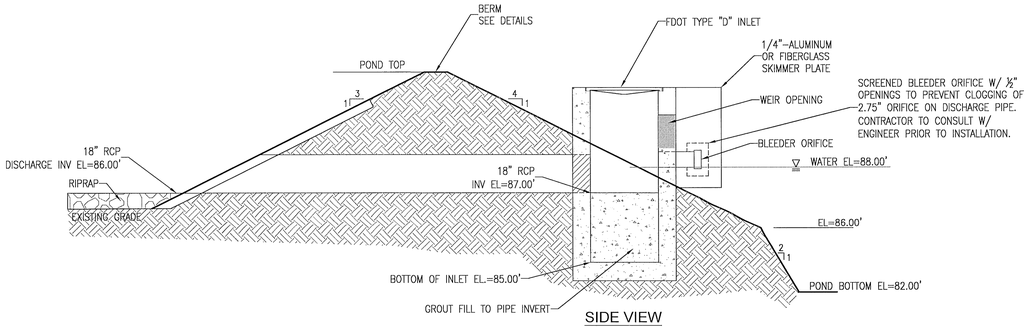

SIDE VIEW

OUTFALL/LEVEL CONTROL STRUCTURE DETAIL
N.T.S.

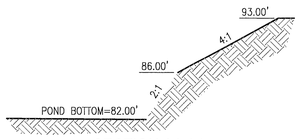

SECTION A1-A1

POND A CROSS SECTIONS
N.T.S.

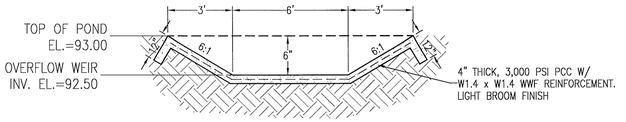

EMERGENCY OVERFLOW WEIR DETAIL
SCALE: NTS

REBOL-BATTLE & ASSOCIATES
Civil Engineers and Surveyors
2301 N. Ninth Avenue, Suite 300
Pensacola, Florida 32503
Telephone 850.438.0400 Fax 850.438.0448
EB 00009697 LB7916

POND 'A' DETAIL

BROOKHAVEN PHASE 4
A 193 LOT SUBDIVISION
PENSACOLA, FLORIDA

No.	DATE	REVISION

SEAL
NOT FOR CONSTRUCTION
PAUL A. BATTLE
LICENSE
No. 53126
6/8/22
STATE OF FLORIDA
PAUL A. BATTLE, P.E.
No.53126

Dr. By:
Ck By: PAB
Job No.: 2015.035 F
Date: 6/1/2022

DRAWING No.
C3.7

This drawing is the property of Rebol-Battle & Associates, and may not be reproduced without written permission.

P:\2015\2015.035 (F) - BROOKHAVEN PHASE 4\DRAWINGS\C3.6 GRADING PLAN.DWG

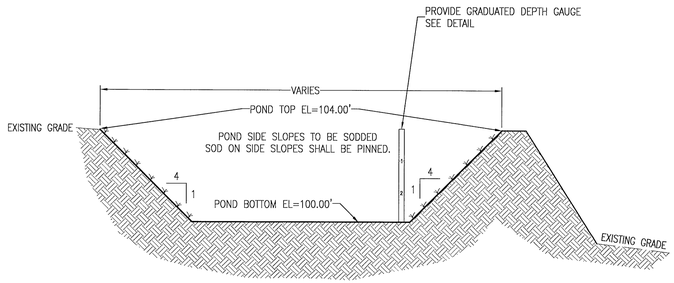

NOTE:
THE ENTIRE BANK SLOPE SHALL BE SODDED IN A MANNER TO GUARANTEE HEALTHY GRASS GROWTH (FREE FROM NOXIOUS WEEDS) SUCH AS ST. AUGUSTINE, CENTIPEDE OR OTHER SUITABLE GRASS.

RETENTION POND CROSS SECTION

N.T.S.

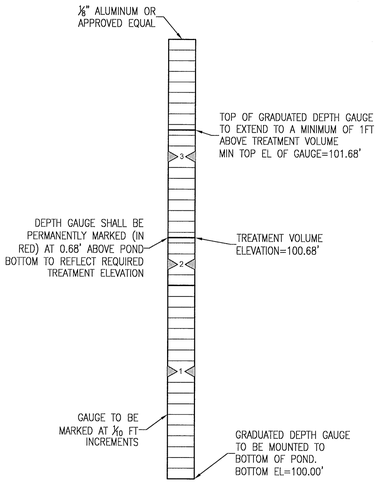

GRADUATED DEPTH GAUGE

N.T.S.

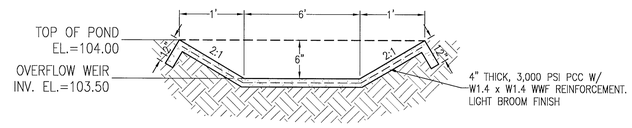

EMERGENCY OVERFLOW WEIR DETAIL

SCALE: NTS

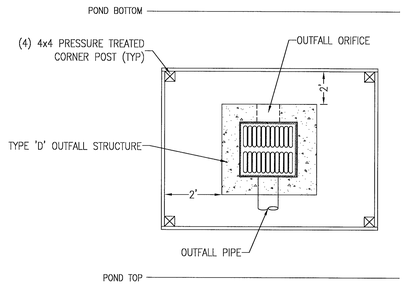

PLAN VIEW

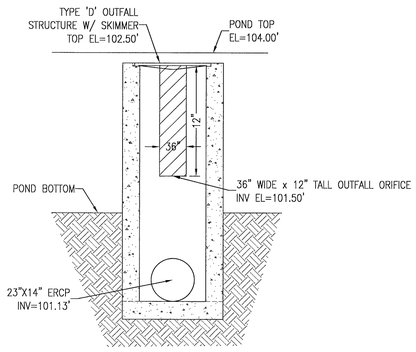

FRONT VIEW

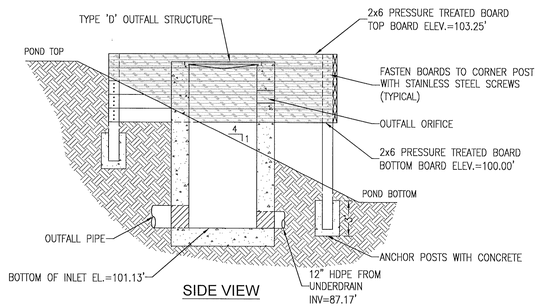

SIDE VIEW

TYPE 'D' OUTFALL STRUCTURE DETAIL

N.T.S.

REBOL-BATTLE & ASSOCIATES
Civil Engineers and Surveyors
2387 N. Palafox Street, Suite 300
Pensacola, Florida 32501
Telephone 850.438.0400 Fax 850.438.0448
EB 0000596/57 LB7916

POND 'B' DETAIL

BROOKHAVEN PHASE 4
A 193 LOT SUBDIVISION
PENSACOLA, FLORIDA

No.	DATE	REVISION

SEAL
NOT FOR CONSTRUCTION
PAUL A. BATTLE, P.E.
No. 53126
6/15/22
STATE OF FLORIDA

Dr. By:
Ck By: PAB
Job No.: 2015.035 F
Date: 6/1/2022

DRAWING No.
C3.8

This drawing is the property of Rebol-Battle & Associates, and may not be reproduced without written permission.

I:\2015\035\03 Engr\Dwg\Brookhaven Phase 4 Grading.dwg, 6/15/2022 3:39:06 PM, Paul Battle

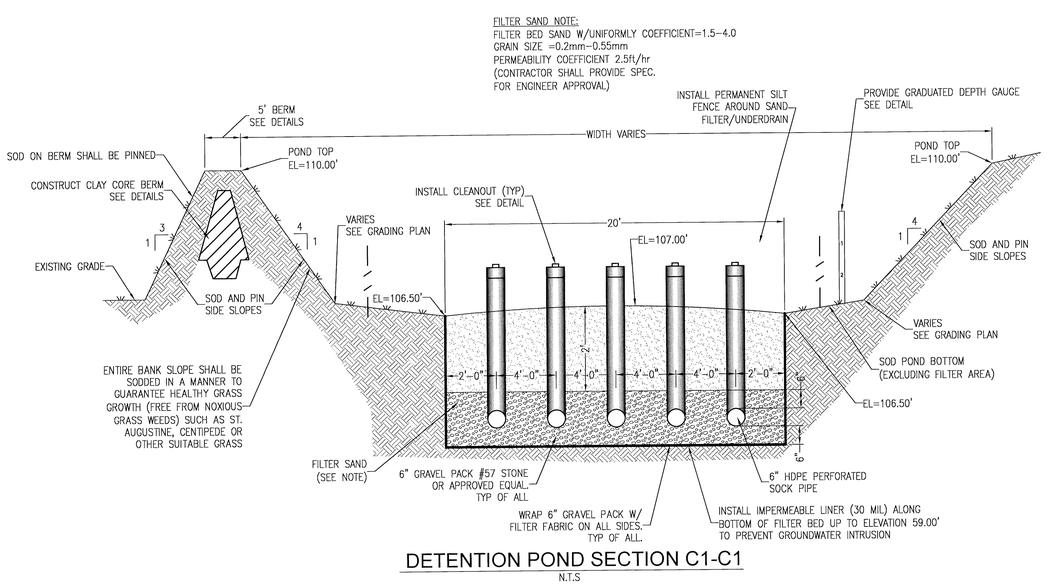

DETENTION POND SECTION C1-C1

N.T.S

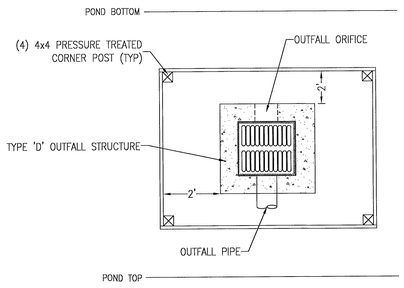

PLAN VIEW

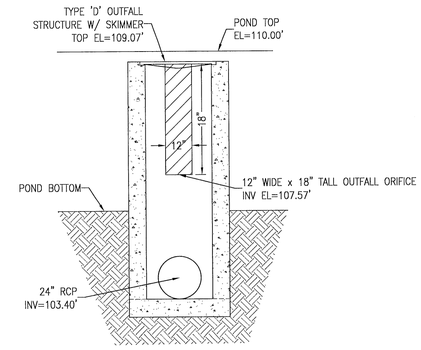

FRONT VIEW

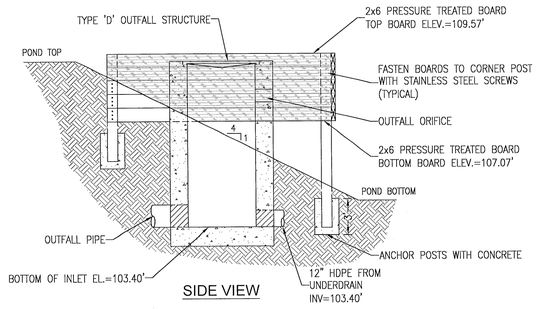

SIDE VIEW

TYPE 'D' OUTFALL STRUCTURE DETAIL

N.T.S.

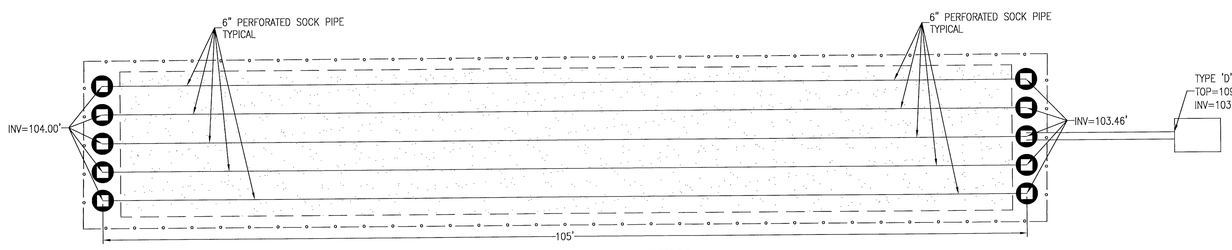

SAND FILTER PLAN VIEW

N.T.S.

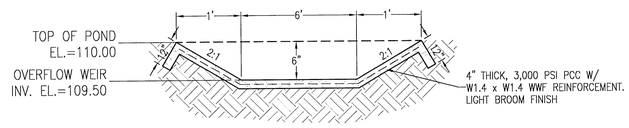

EMERGENCY OVERFLOW WEIR DETAIL

SCALE: NTS

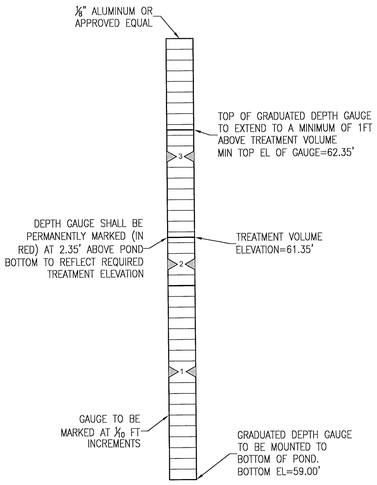

GRADUATED DEPTH GAUGE

N.T.S.

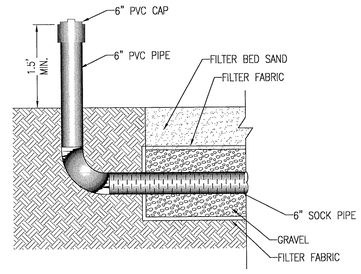

SAND FILTER CLEANOUT DETAIL

N.T.S.

REBOL-BATTLE & ASSOCIATES
Civil Engineers and Surveyors
2301 N. Ninth Avenue, Suite 300
Pensacola, Florida 32503
Telephone 850.438.9661 FAX 850.438.0448
EB 00009657 LB7916

POND 'C' DETAIL

BROOKHAVEN PHASE 4
A 193 LOT SUBDIVISION
PENSACOLA, FLORIDA

No.	DATE	REVISION

SEAL
NOT FOR CONSTRUCTION
STATE OF FLORIDA
LICENSE
PAUL A. BATTLE, P.E.
No.33126
6/15/22

Dr. By:
Ck By: PAB
Job No.: 2015.035 F
Date: 6/1/2022

DRAWING No.
C3.9

This drawing is the property of Rebol-Battle & Associates, and may not be reproduced without written permission.

P:\2015\2015.035 (F) - BROOKHAVEN PHASE 4\DRAWINGS\C3.9 GRADING PLAN.DWG

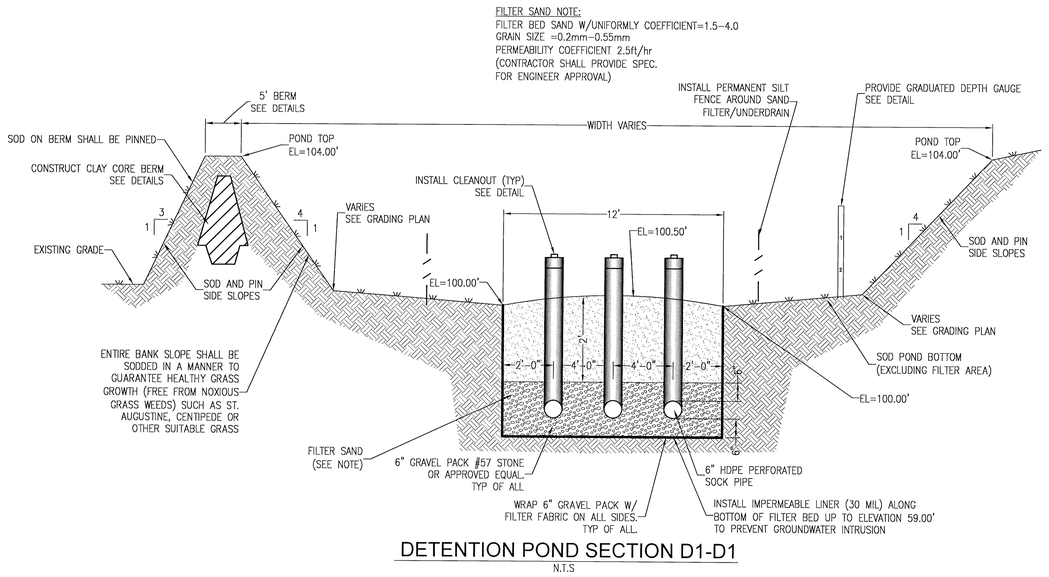

DETENTION POND SECTION D1-D1

N.T.S

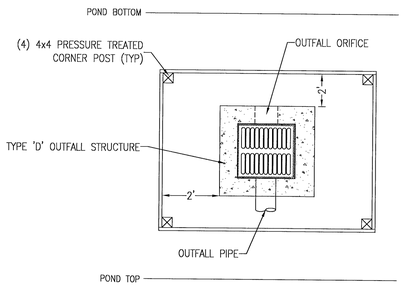

PLAN VIEW

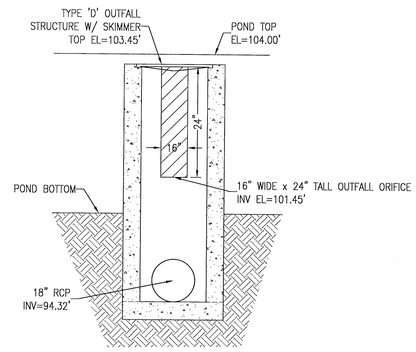

FRONT VIEW

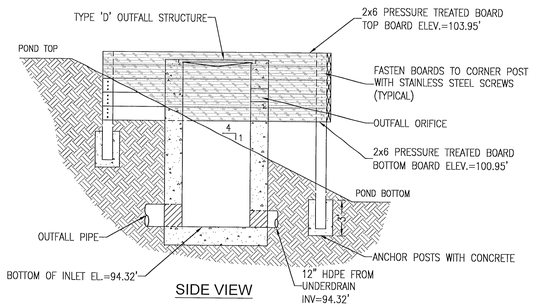

SIDE VIEW

TYPE 'D' OUTFALL STRUCTURE DETAIL

N.T.S.

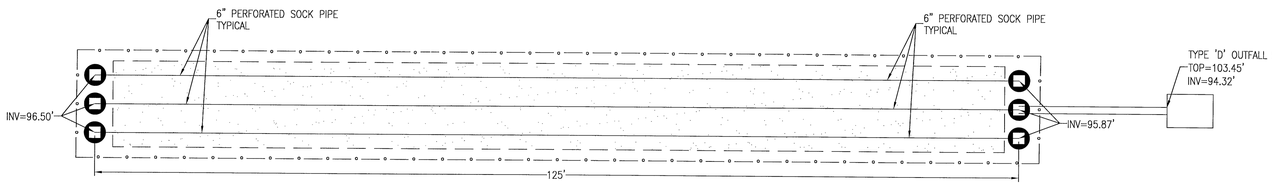

SAND FILTER PLAN VIEW

N.T.S.

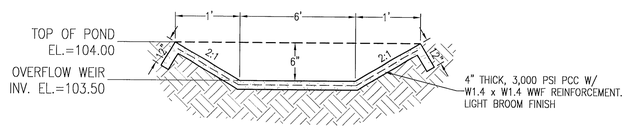

EMERGENCY OVERFLOW WEIR DETAIL

SCALE: NTS

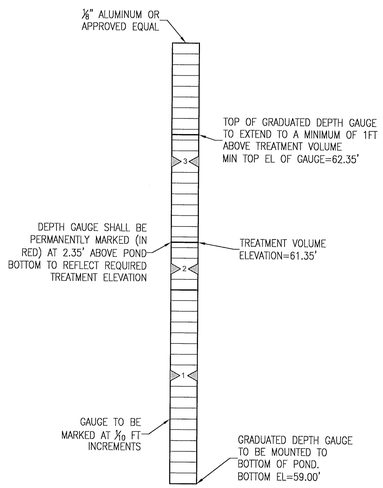

GRADUATED DEPTH GAUGE

N.T.S.

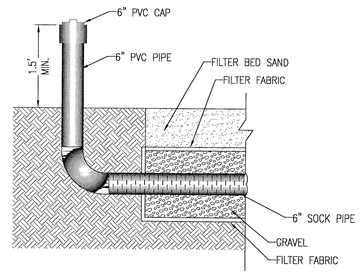

SAND FILTER CLEANOUT DETAIL

N.T.S.

REBOL-BATTLE & ASSOCIATES
Civil Engineers and Surveyors
2301 N. Ninth Avenue, Suite 300
Pensacola, Florida 32503
Telephone 850.438.0400 Fax 850.438.0448
EB #0000697 LB#916

POND 'D' DETAIL

BROOKHAVEN PHASE 4
A 193 LOT SUBDIVISION
PENSACOLA, FLORIDA

No.	DATE	REVISION

SEAL
NOT FOR CONSTRUCTION
PAUL A. BATTLE, P.E.
LICENSE
No. 53126
STATE OF
FLORIDA
4/5/22

Dr. By:
Ck By: PAB
Job No.: 2015.035 F
Date: 6/1/2022

DRAWING No.

C3.10

This drawing is the property of Rebol-Battle & Associates, and may not be reproduced without written permisson.

P:\2015\2015035 (F) - BROOKHAVEN PHASE 4\DRAWINGS\C3.0 GRADING PLAN.DWG

MINIMUM STANDARDS FOR TYPICAL RESIDENTIAL GRADING CONTROL PLAN

NOTES:

1. A POSITIVE DRAINAGE OUTFALL IS A CONVEYANCE SYSTEM (DRAINAGE EASEMENT, ROADWAY WITH A DRAINAGE SYSTEM ~ CURB & GUTTER, OR DITCH) WHICH CONTAINS, CONTROLS, AND TRANSMITS STORMWATER RUNOFF TO A CREEK, STREAM, RIVER, BAY, GULF, OCEAN, OR OTHER WATERS OF THE STATE, OR WATERS OF THE UNITED STATES, OR TO ANY FUNCTIONING ESCAMBIA COUNTY OR STATE DRAINAGE SYSTEM.
2. FINISH FLOOR ELEVATION SHALL BE AS SPECIFIED BY BUILDING CODE.
3. THESE ARE MINIMAL REQUIREMENTS AND DO NOT RELIEVE THE BUILDER FROM PROVIDING ADDITIONAL GRADING TO DIRECT STORMWATER TO A POSITIVE OUTFALL DRAINAGE SYSTEM AND ELIMINATE NEGATIVE IMPACTS TO ADJACENT LOTS AND PROPERTIES.
4. DISTURBED LOT AREAS SHALL BE COMPLETELY STABILIZED WITH SOD. IF THE HOME IS CONSTRUCTED, STABILIZE THE FIRST 10' WITH SOD AND SOD AND/OR SEED AND MULCH THE REMAINDER OF THE LOT.
5. THE HOMEBUILDER SHALL COMPLY WITH STATE PERMITTING REQUIREMENTS FOR LARGE AND SMALL CONSTRUCTION SITES, SPECIFICALLY THE NPDES PERMITS WHICH REQUIRES A DETAILED STORMWATER POLLUTION PREVENTION PLAN (SWPPP) BEING AVAILABLE ONSITE FOR REVIEW DURING ALL PHASES OF CONSTRUCTION.
6. LOT CLEARING ACTIVITIES SHALL NOT PROCEED WITHOUT BUILDING PERMITS FOR THOSE LOTS EXCLUDING CLEARING REQUIRED FOR CONSTRUCTION OF CONVEYANCE SWALES OR DRAINAGE FEATURES DESIGNATED AS THE DEVELOPER'S RESPONSIBILITY.
7. ALL NEW RUNOFF, DOWNSPOUTS, AND GUTTERS SHALL BE ROUTED TO CARRY ALL STORMWATER TO THE ROADS OR SWALES THAT LEAD TO THE RETENTION POND OR APPROVED DRAINAGE SYSTEM.
8. PROVIDE EROSION CONTROL MEASURES TO ENSURE ALL SEDIMENTS SHALL BE RETAINED ON EACH INDIVIDUAL LOT.
9. WETLANDS SHALL BE PROTECTED WITH FABRIC SILT FENCING AND BURIED HAYBALE SYSTEMS (DOUBLE ROWS AS NECESSARY).

ESCAMBIA COUNTY FLORIDA

LEGEND:
F.F.E. – FINISH HABITABLE FLOOR ELEVATION
F.G.E. – FINISH GRADE ELEVATION
– STORMWATER FLOW DIRECTION ARROW
– GRADE SLOPE (MINIMUM)
– MINIMUM GRADE

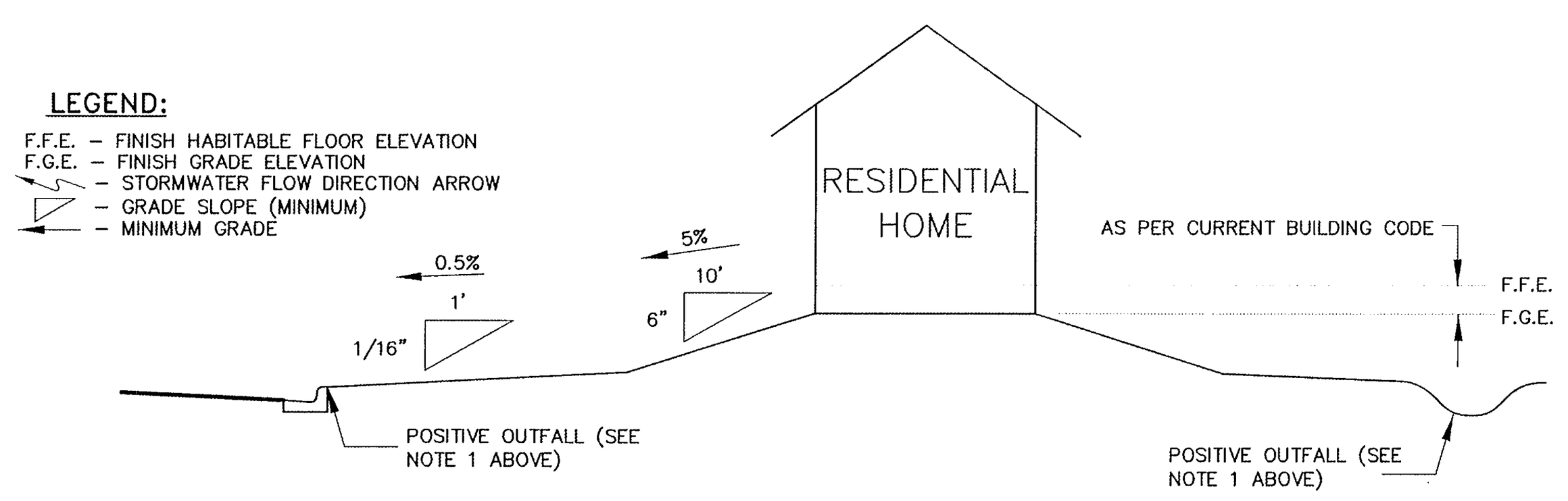

ELEVATION VIEW

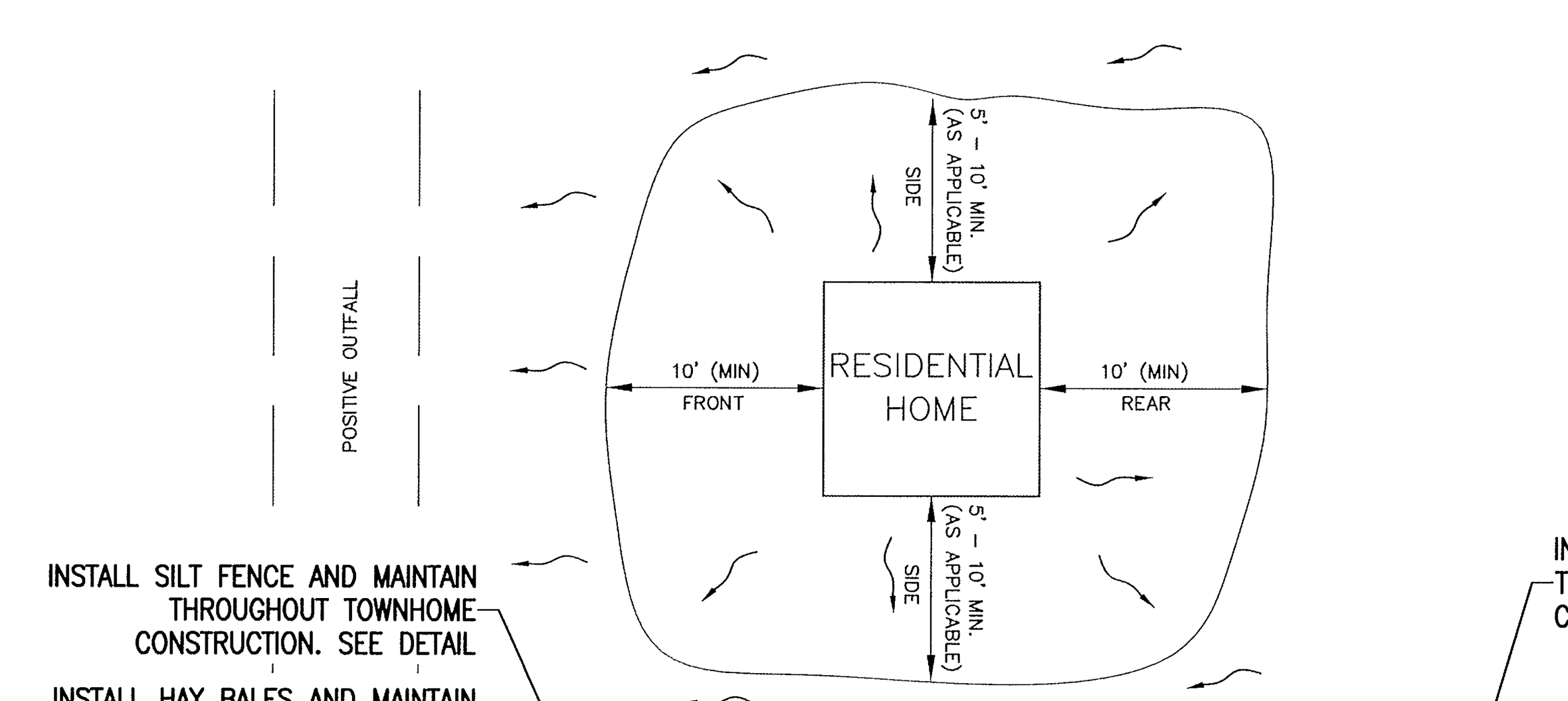

PLAN VIEW

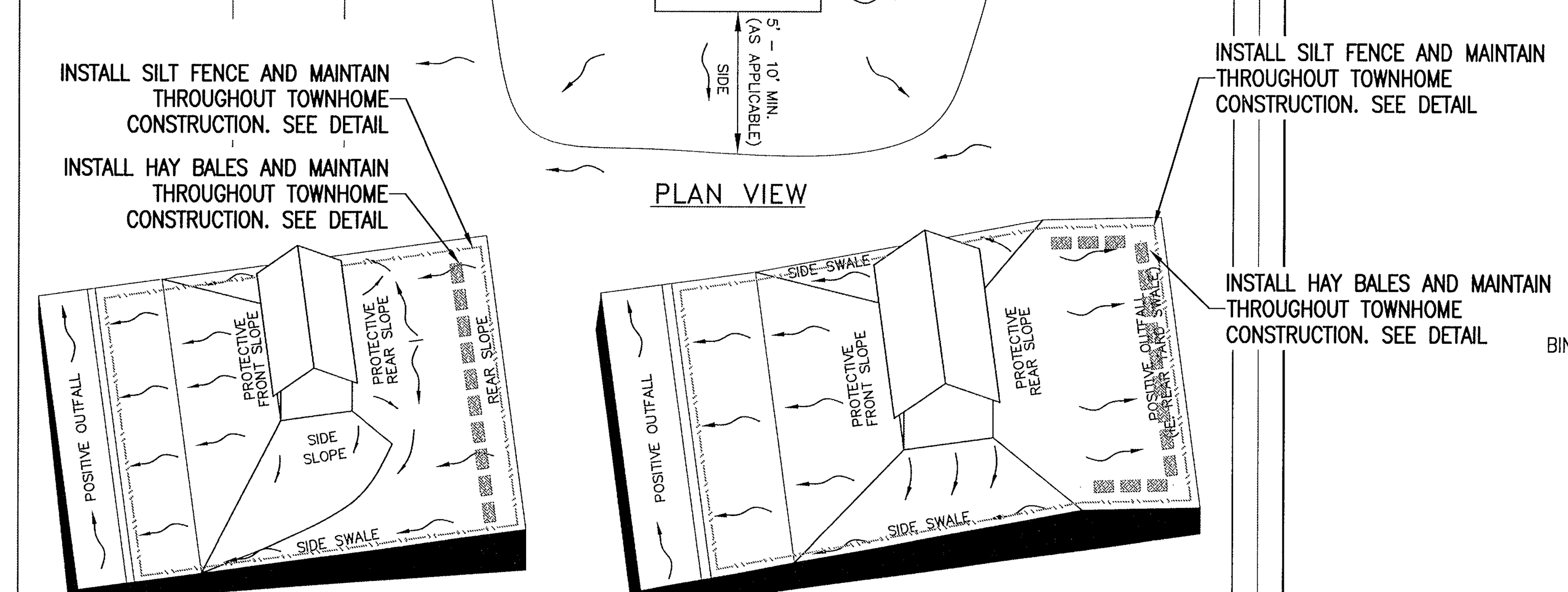

LOT GRADING ~ TYPE "A"
ALL DRAINAGE TO STREET

LOT GRADING ~ TYPE "B"
DRAINAGE TO STREET & TO REAR LOT LINE

REVISED SEPT. 15, 2009

NOTE: VARIATIONS IN GRADING ARE ACCEPTABLE IF GRADING DRAINS TO A POSITIVE OUTFALL.

L:\Design_Land\ENGINEERING DETAILS\DETAILS SHEETS\DRIVEWAY_LOT_GRADING_DETAILS_SEPT. 09.dwg

NOTES:

1) ALL MATERIALS AND LABOR FOR INSTALLATION WILL BE THE RESPONSIBILITY OF THE PROPERTY OWNER/CONTRACTOR.
2) DRIVEWAYS ABUTTING PAVED ROADS SHALL BE 1 – ½" ASPHALT WITH 6" STABILIZED SUB GRADE OR 4" TO 6" CONCRETE WITH 4" STABILIZED SUB GRADE – 95% COMPACTION (MODIFIED PROCTOR) WITH LBR 40 BETWEEN EDGE OF ROADWAY AND R/W LINE. COMPACTION AND TESTING IF NECESSARY, THIS WILL BE THE RESPONSIBILITY OF THE OWNER/CONTRACTOR.
3) DRIVEWAYS ABUTTING A DIRT ROAD SHALL BE MILLED ASPHALT, GRADED AGGREGATE BASE, OR WASHED CONCRETE (4" IN DEPTH) ON THE COUNTY MAINTAINED PORTION OF DRIVEWAY.
4) IF NECESSARY, REFER TO FDOT INDEX DETAILS AS REFERENCED BELOW.
5) RADIUS OR FLARE IS REQUIRED FOR TYPE II OR TYPE III CONNECTIONS. SEE DETAIL.
6) PARKING SPACES WITHIN COUNTY RIGHT-OF-WAY SHALL PROVIDE A MINIMUM OF 2 PARKING SPACES.
7) TYPICAL DRIVEWAY SECTIONS ARE TO BE 12' WIDE MINIMUM.

SWALE NOTE:
1. 15' PUBLIC DRAINAGE/ACCESS EASEMENT SWALES ARE TO BE BUILT BY THE SITE CONTRACTOR.
2. 10' PRIVATE DRAINAGE EASEMENT SWALES (BETWEEN LOTS) ARE TO BE BUILT BY HOMEBUILDER

MAXIMUM LOT SURFACE COVERAGE

50-FT RESIDENTIAL LOTS	3,250 SF (HOUSE & DRIVEWAY)
70-FT RESIDENTIAL LOTS	4,500 SF (HOUSE & DRIVEWAY)

TOTAL IMPERVIOUS SURFACE

NEW INFRASTRUCTURE	217,135 SF (ROADWAY, SIDEWALK, CURB)
NEW INFRASTRUCTURE	683,500 SF (LOTS)
TOTAL IMPERVIOUS AREA FOR POST DEVELOPMENT CONDITIONS	900,635 SF (NEW INFRASTRUCTURE & LOTS)

TYPE I

CURB CUT DRIVEWAY FOR COUNTY TYPE "B" LAYBACK CURBS.

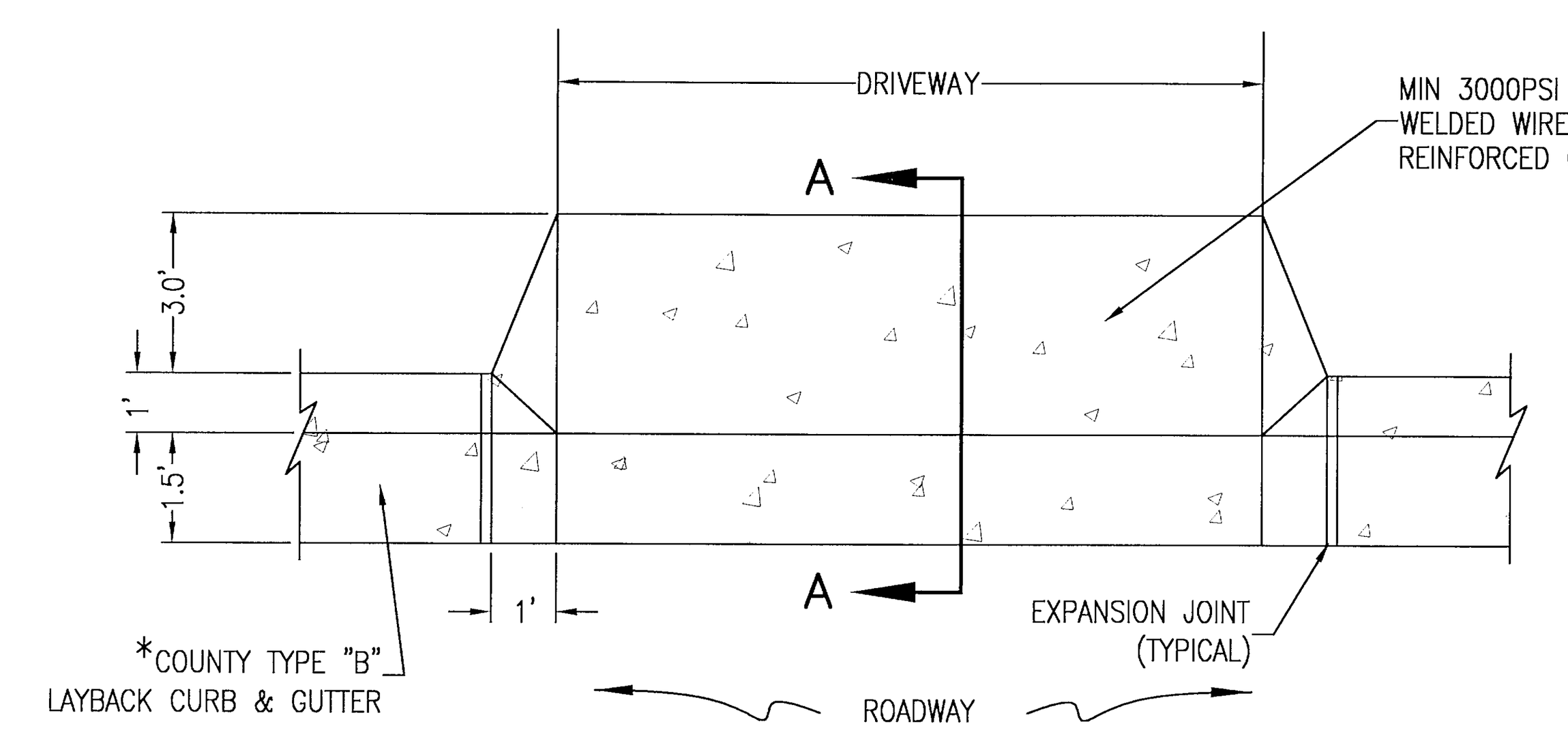

PLAN VIEW

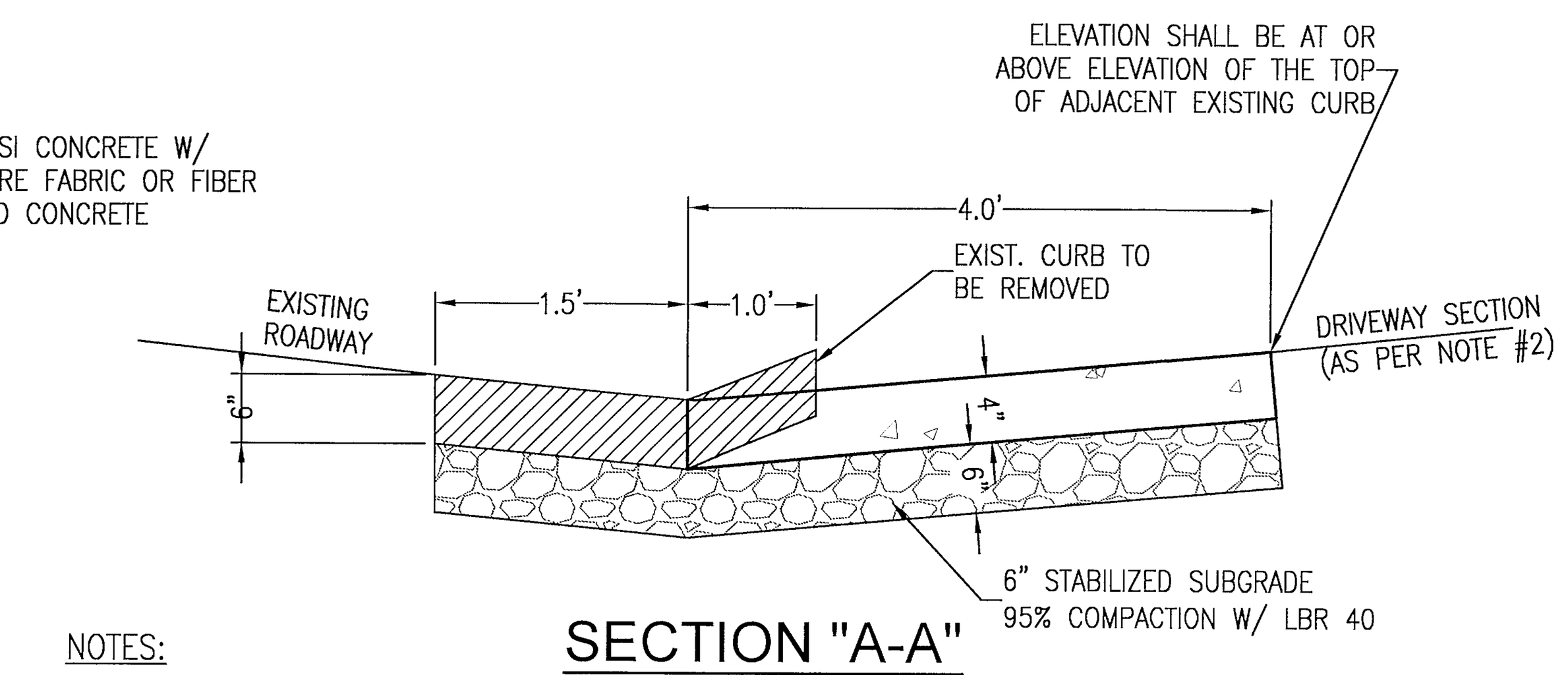

SECTION "A-A"

NOTES:
1.) SEE STANDARD COUNTY CURB DETAILS FOR REFERENCE.
2.) SEE F.D.O.T. INDEX NO. 515 FOR OTHER CONNECTIONS.
* FOR OTHER TYPE CURBS, DIMENSIONS MAY BE ADJUSTED TO FIT.

TYPICAL DRIVEWAY CONNECTION STANDARDS FOR EXISTING ROADWAY CONDITIONS

NOT TO SCALE

POND INFORMATION				
	Treatment Volume Required	Treatment Volume Elevation	Primary Discharge Elevation	Volume Below Primary Discharge
POND A 'WET'	84,689.90	89.47	89.47	84,741
POND B 'DRY'	16,841.60	100.67	101.50	39,355
POND C 'DRY'	36,995.30	107.57	107.57	37,036
POND D 'DRY'	71,226.00	101.45	101.45	71,902

PIPE SUMMARY – POND A	
18" RCP	1,020 LF
24" RCP	378 LF
30" RCP	1,064 LF
36" RCP	199 LF
TOTAL	2,645 LF
INLETS & MANHOLES	18
MITERED END	2
OUTFALL STRUCTURE	1

PIPE SUMMARY – POND C	
18" RCP	44 LF
24" RCP	648 LF
30" RCP	70 LF
TOTAL	1,172 LF
INLETS & MANHOLES	8
MITERED END	2
OUTFALL STRUCTURE	1

PIPE SUMMARY – POND B	
18" RCP	104 LF
23"X19" ERCP	25 LF
TOTAL	129 LF
INLETS & MANHOLES	2
MITERED END	2
OUTFALL STRUCTURE	1

PIPE SUMMARY – POND D	
12" RCP	45 LF
18" RCP	1,629 LF
24" RCP	526 LF
TOTAL	2,200 LF
INLETS & MANHOLES	25
MITERED END	3
OUTFALL STRUCTURE	1

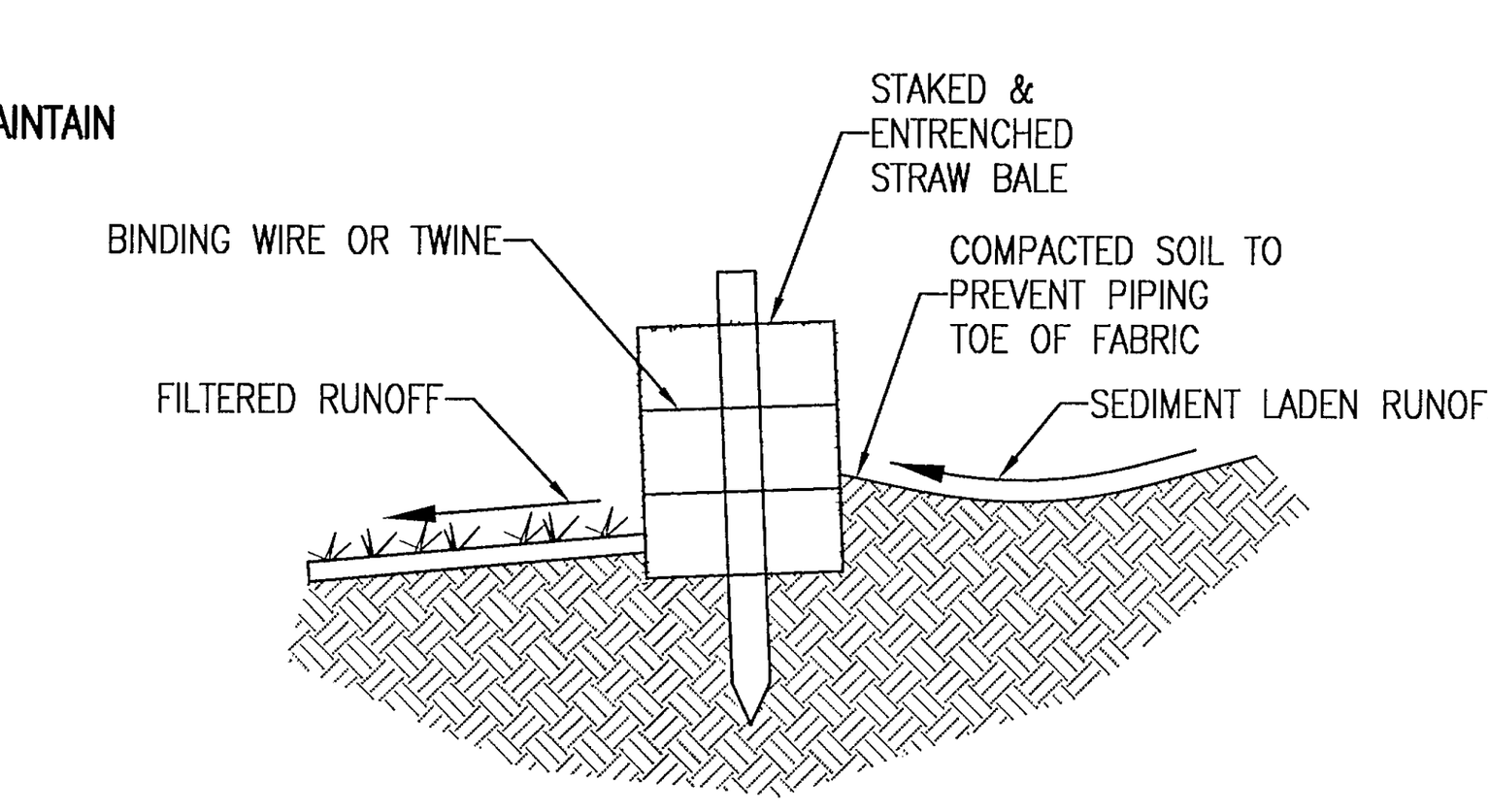

STRAW BALE DETAIL
N.T.S.

NOTE:
WETLANDS SHALL BE PROTECTED WITH FABRIC SILT FENCING AND BURIED HAYBALE SYSTEMS (DOUBLE ROW AS NECESSARY.

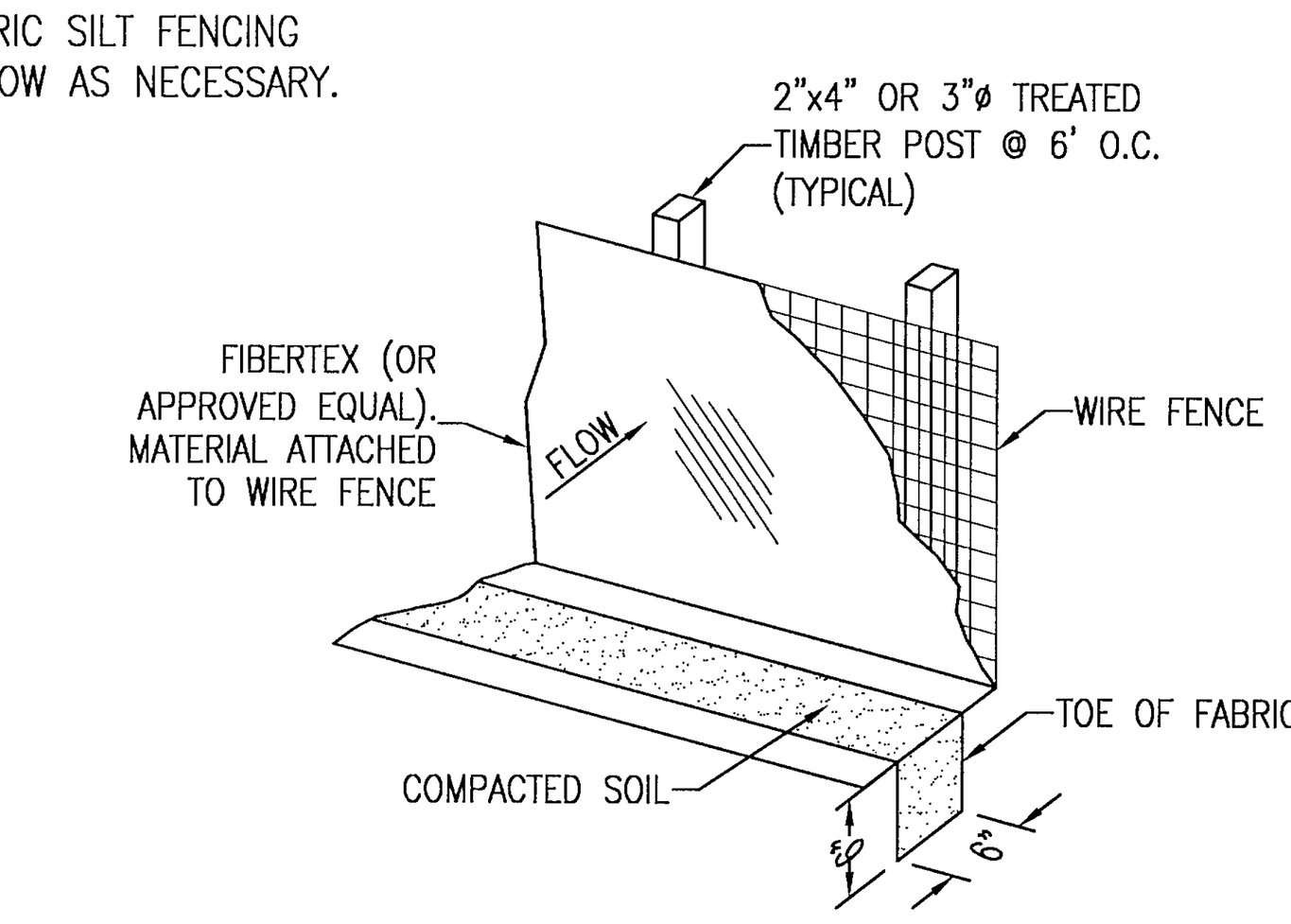

SILT FENCE DETAIL
N.T.S.

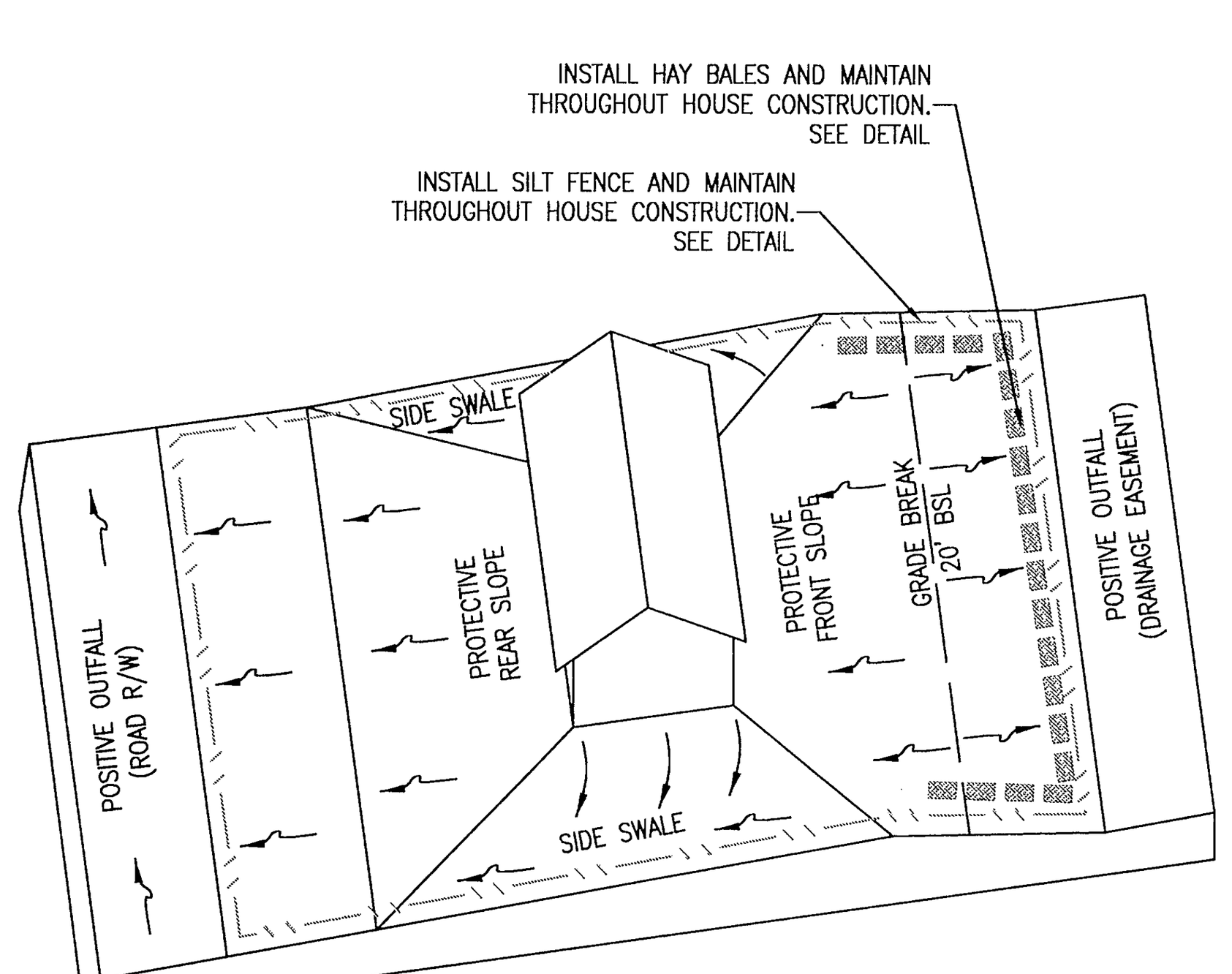

LOT GRADING TYPE 'B1'
DRAINAGE TO STREET & LOT LINE
PORTION OF LOT TO REAR LOT SWALE SHALL BE FROM THE BUILDING SETBACK LINE

NOTE: VARIATIONS IN GRADING ARE ACCEPTABLE IF GRADING DRAINS TO A POSITIVE OUTFALL.

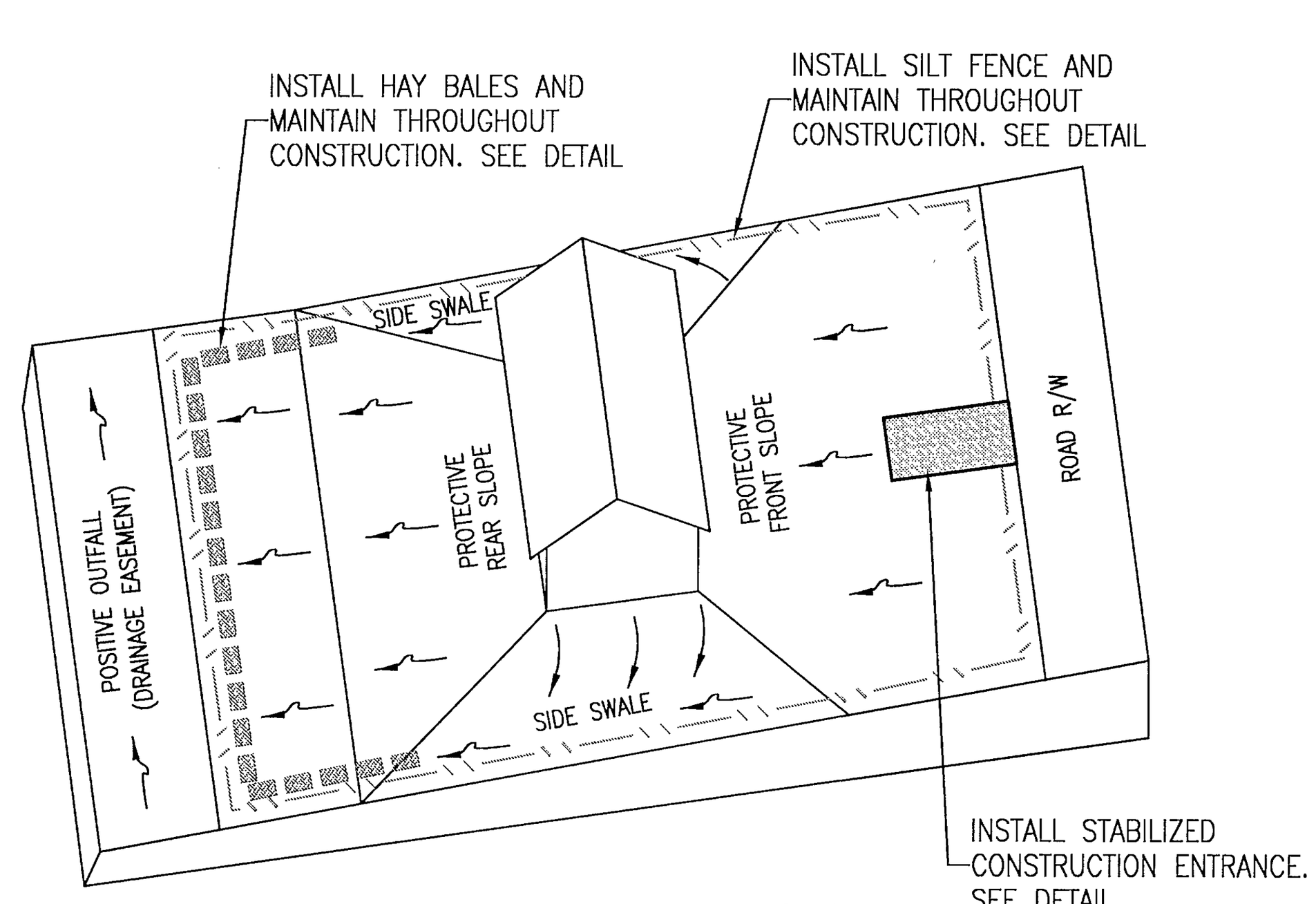

LOT GRADING TYPE 'C'
THE MAJORITY OF THE LOT SHALL SLOPE TO THE DRAINAGE EASEMENT AT THE REAR OF THE LOT INSTEAD OF THE STREET

NOTE: VARIATIONS IN GRADING ARE ACCEPTABLE IF GRADING DRAINS TO A POSITIVE OUTFALL.

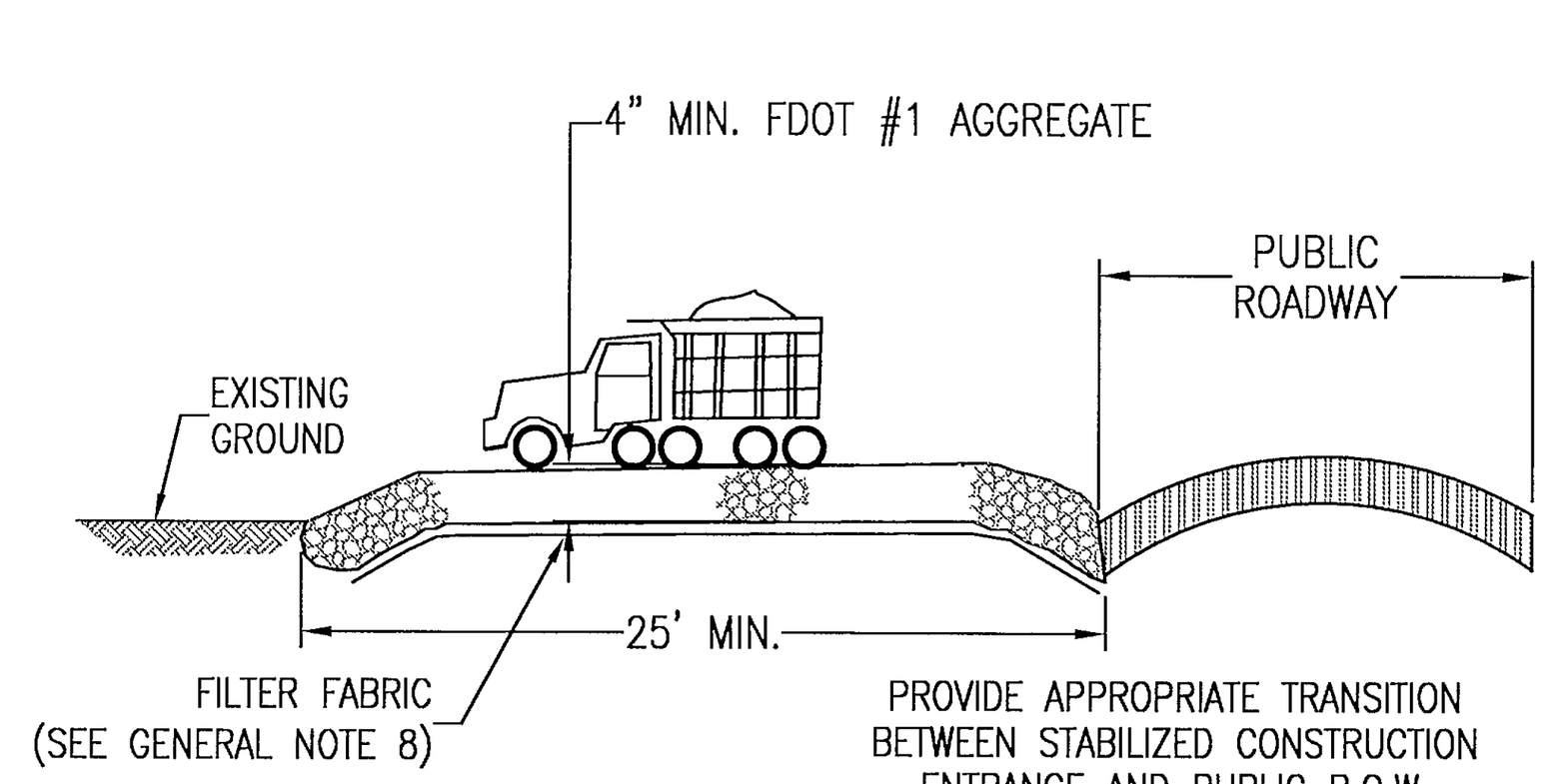

12' WIDE STABILIZED CONSTRUCTION ENTRANCE DETAIL
N.T.S.

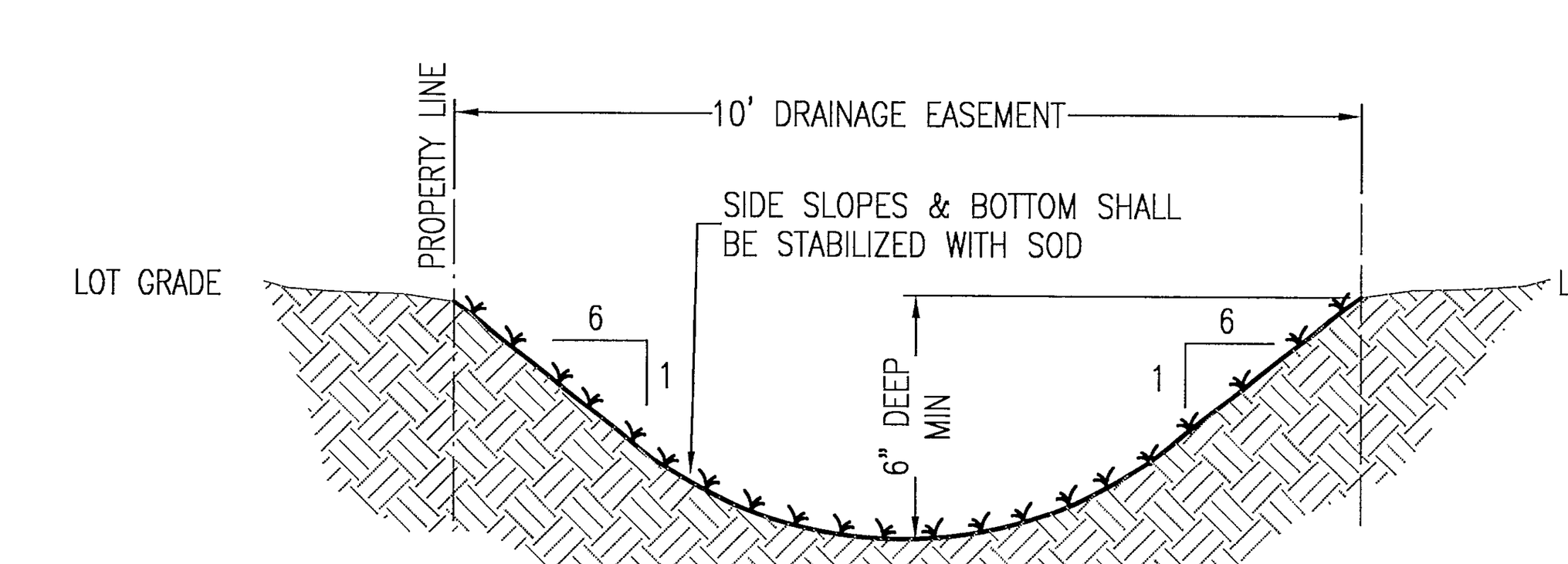

NOTES:
1. SIDE YARD SWALES SHALL BE BUILT BY THE HOMEBUILDER. CONVEYANCE SWALES SHALL BE BUILT BY THE CONTRACTOR.
2. HOME EQUIPMENT (I.E. AC UNITS) SHALL NOT HINDER THE PROPER INSTALLATION AND/OR FUNCTION OF THE SIDE YARD SWALES
3. ALL NEW ROOF RUNOFF, DOWNSPOUTS, AND GUTTERS, SHALL BE ROUTED TO CARRY ALL STORMWATER TO THE ROADS OR SWALES THAT LEAD TO THE RETENTION POND

TYPICAL PRIVATE 10' DRAINAGE EASEMENT SWALE
N.T.S

POND INFORMATION TABLE				
	ACREAGE	BLOCK	LOT NUMBERS	LOT TOTAL
POND A "WET"	POND TOP 1.92	A	1 TO 55	80 LOTS
	POND PARCEL 3.89	D	1 TO 25	
POND B "DRY"	POND TOP 0.86 / POND PARCEL 1.33	C	3 TO 4	2 LOTS
POND C "DRY"	POND TOP	B	8 TO 13, 40 TO 49	49 LOTS
	1.34	C	1 TO 2	
	POND PARCEL	D	26 TO 50	
	2.09	E	8 TO 13	
POND D "DRY"	POND TOP	A	56 TO 70	62 LOTS
	2.25	B	1 TO 7, 14 TO 39	
	POND PARCEL 3.49	E	1 TO 7, 14 TO 20	

P:\2015\2015.035 (F) – BROOKHAVEN PHASE 4\DRAWINGS\C3.0 GRADING PLAN.DWG

RBA
REBOL-BATTLE & ASSOCIATES
Civil Engineers and Surveyors
2301 N. Ninth Avenue, Suite 300
Pensacola, Florida 32503
Telephone 850.438.0400 Fax 850.438.0448
EB 00009657 LB7916

GRADING & DRAINAGE PLAN

BROOKHAVEN PHASE 4
A 193 LOT SUBDIVISION
PENSACOLA, FLORIDA

No.	DATE	REVISION

SEAL
NOT FOR CONSTRUCTION
PAUL A. BATTLE LICENSE No. 53126 6/15/22 STATE OF FLORIDA PROFESSIONAL ENGINEER
PAUL A. BATTLE, P.E. No.53126

Dr. By:
Ck By: PAB
Job No.: 2015.035 F
Date: 6/1/2022

DRAWING No.
C3.11

This drawing is the property of Rebol-Battle & Associates, and may not be reproduced without written permission.

PROPOSED SEQUENCE OF CONSTRUCTION:

1. THE INSTALLATION OF ALL SEDIMENT AND EROSION CONTROL DEVICES THAT CAN BE PLACED PRIOR TO ANY MAJOR SOIL DISTURBANCES.
2. CLEAR AND REMOVE ALL EXISTING VEGETATION IN THOSE AREAS WHERE NECESSARY. ALL REMAINING VEGETATION IS TO BE PROPERLY PROTECTED AND IS TO REMAIN IN ITS NATURAL STATE. TOPSOIL IN AREAS TO BE DISTURBED IS TO BE STRIPPED TO A MINIMUM DEPTH OF SIX (6) INCHES AND STOCKPILED SEPARATELY FROM OTHER EXCAVATED SOIL(S)
3. THE IMMEDIATE INSTALLATION OF ALL REMAINING SEDIMENT AND EROSION CONTROL DEVICES.
4. PERFORM ALL DEMOLITION WORK.
5. CONSTRUCT ROUGH GRADING OF STORMWATER PONDS.
6. CONSTRUCT ALL UNDERGROUND UTILITIES AND STORM DRAIN SYSTEMS.
7. CONSTRUCT ROADS (SUBGRADE, CURB & GUTTER, BASE, PAVEMENT, SIDEWALKS AND LANDSCAPING).
8. UPON THE COMPLETION OF THE CONSTRUCTION ACTIVITIES, PROVIDE RESTORATION, FINE GRADE REMAINDER OF SITE, RESPREAD STOCKPILED TOPSOIL AND STABILIZE WITH PERMANENT VEGETATIVE COVER AND LANDSCAPING.
9. COMPLETE STORMWATER PONDS I.E. INSTALL UNDERDRAIN SYSTEM.
10. THE REMOVAL OF APPROPRIATE TEMPORARY SEDIMENT AND EROSION CONTROL DEVICES.

ENVIRONMENTAL NOTES:

1. ALL VEGETATIVE NATURAL BUFFERS SHALL REMAIN IN NATURAL VEGETATIVE STATE THROUGHOUT THE PROPERTY. THE VNB'S ARE USED TO TREAT THE REAR LOTS FOR STORM WATER TREATMENT.
2. ALL REMAINING WETLANDS & WETLAND BUFFERS, VEGETATIVE NATURAL BUFFERS AND CONSERVATION EASEMENTS SHALL REMAIN UNDISTURBED IN NATURAL VEGETATIVE STATE.

SWALE NOTE:

1. 15' PUBLIC DRAINAGE/ACCESS EASEMENT SWALES ARE TO BE BUILT BY THE SITE CONTRACTOR.
2. 10' PRIVATE DRAINAGE EASEMENT SWALES (BETWEEN LOTS) ARE TO BE BUILT BY HOMEBUILDER

ESCAMBIA COUNTY SPECIAL NOTE:

CONSTRUCTION PLAN APPROVAL IS REQUIRED TO DOCUMENT THE DESIGN OF INFRASTRUCTURE TO ADEQUATELY SERVE THE CREATED LOTS. THE APPROVAL ALLOWS THE CONSTRUCTION OF THE SUBDIVISION INFRASTRUCTURE AREAS ONLY, AS SPECIFICALLY DESIGNATED, TO PROCEED BUT IT DOES NOT ALLOW DEVELOPMENT ON THE INDIVIDUAL SUBDIVISION LOTS. NEITHER PRELIMINARY PLAT OR CONSTRUCTION PLAN ALLOW LAND CLEARING/ LAND DISTURBANCE ACTIVITIES AND DEVELOPMENT ON THE INDIVIDUAL SUBDIVISION LOTS AS BUILDING PERMITS FOR THE DWELLINGS WILL BE REQUIRED FOR THESE ACTIVITIES PRIOR, ON EACH LOT/PARCEL IN THE FUTURE.

RUNOFF NOTE:

LOTS 19 THRU 35, BLOCK A RUNOFFS FROM ALL IMPERVIOUS SURFACES, INCLUDING ROOF RUNOFFS SHALL BE ROUTED TO THE ROADWAY. THE USE OF GUTTERS IS AN ACCEPTABLE METHOD TO COMPLETE REQUIREMENT. ONLY SODDED REAR YARD AREA MAY BE DIRECTED TOWARDS REAR OF LOT.

HORIZONTAL SCALE
40 0 20 40 80 160
(IN FEET)
1 INCH = 40 FT. (24"x36")
1 INCH = 80 FT. (12"x18")

N W E S

ACOE, NWFWMD & ESCO JURISDICTIONAL WETLAND LINE DELINEATED BY BIOME CONSULTING GROUP ON NOVEMBER 6, 2020

TBM 120.30

PARCEL D
DRY STORMWATER POND
PUBLIC
3.49 ACRES

WATER BIRCH RD
50' PUBLIC R/W

IRONWEED CIR
50' PUBLIC R/W

BLOCK A
BLOCK B
BLOCK E

5' PRIVATE DRAINAGE EASEMENT TYPICAL OF ALL
5' UTILITY EASEMENT
10' UTILITY EASEMENT
20' ECUA UTILITY EASEMENT
7.5' PUBLIC DRAINAGE/ ACCESS EASEMENT
15' PUBLIC DRAINAGE/ ACCESS EASEMENT

REBOL-BATTLE & ASSOCIATES
Civil Engineers and Surveyors
2301 N. Ninth Avenue, Suite 300
Pensacola, Florida 32503
Telephone 850.438.0400 Fax 850.438.0448
EB 00009657 LB7916

NEIGHBORHOOD LOT GRADING PLAN

BROOKHAVEN PHASE 4
A 193 LOT SUBDIVISION
PENSACOLA, FLORIDA

No.	DATE	REVISION

SEAL
NOT FOR CONSTRUCTION
PAUL A. BATTLE LICENSE No. 53126 STATE OF FLORIDA
6/15/22
PAUL A. BATTLE, P.E. No.53126

Dr. By:
Ck By: PAB
Job No.: 2015.035 F
Date: 6/1/2022

DRAWING No.
C3.12

This drawing is the property of Rebol-Battle & Associates, and may not be reproduced without written permission.

R:\2015\2015.035_(F) - BROOKHAVEN PHASE 4\DRAWINGS\C3.0 GRADING PLAN.DWG

HORIZONTAL SCALE

40 0 20 40 80 160

(IN FEET)
1 INCH = 40 FT. (24"x36")
1 INCH = 80 FT. (12"x18")

N
W E
S

PARCEL D
DRY STORMWATER POND
PUBLIC
3.49 ACRES

PARCEL G
COMMON AREA
WETLANDS & WETLAND BUFFERS
PRIVATE
19.34 ACRES

LOT 31
FFE=111.90
B

LOT 32
FFE=112.30
B

LOT 33
FFE=112.90
B

LOT 34
FFE=113.60
B

BLOCK B
LOT 35
FFE=114.15
B

5' PRIVATE
DRAINAGE EASEMENT
TYPICAL OF ALL

LOT 36
FFE=114.75
B

LOT 37
FFE=115.35
B

LOT 38
FFE=115.95
B

LOT 39
FFE=116.55
B

ACOE, NWFWMD & ESCO
JURISDICTIONAL WETLAND
LINE DELINEATED BY BIOME
CONSULTING GROUP ON
NOVEMBER 6, 2020

PARCEL C
DRY STORMWATER POND
PUBLIC
2.09 ACRES

PROPOSED SEQUENCE OF CONSTRUCTION:

1. THE INSTALLATION OF ALL SEDIMENT AND EROSION CONTROL DEVICES THAT CAN BE PLACED PRIOR TO ANY MAJOR SOIL DISTURBANCES.
2. CLEAR AND REMOVE ALL EXISTING VEGETATION IN THOSE AREAS WHERE NECESSARY. ALL REMAINING VEGETATION IS TO BE PROPERLY PROTECTED AND IS TO REMAIN IN ITS NATURAL STATE. TOPSOIL IN AREAS TO BE DISTURBED IS TO BE STRIPPED TO A MINIMUM DEPTH OF SIX (6) INCHES AND STOCKPILED SEPARATELY FROM OTHER EXCAVATED SOIL(S)
3. THE IMMEDIATE INSTALLATION OF ALL REMAINING SEDIMENT AND EROSION CONTROL DEVICES.
4. PERFORM ALL DEMOLITION WORK.
5. CONSTRUCT ROUGH GRADING OF STORMWATER PONDS.
6. CONSTRUCT ALL UNDERGROUND UTILITIES AND STORM DRAIN SYSTEMS.
7. CONSTRUCT ROADS (SUBGRADE, CURB & GUTTER, BASE, PAVEMENT, SIDEWALKS AND LANDSCAPING).
8. UPON THE COMPLETION OF THE CONSTRUCTION ACTIVITIES, PROVIDE RESTORATION, FINE GRADE REMAINDER OF SITE, RESPREAD STOCKPILED TOPSOIL AND STABILIZE WITH PERMANENT VEGETATIVE COVER AND LANDSCAPING.
9. COMPLETE STORMWATER PONDS I.E. INSTALL UNDERDRAIN SYSTEM.
10. THE REMOVAL OF APPROPRIATE TEMPORARY SEDIMENT AND EROSION CONTROL DEVICES.

ESCAMBIA COUNTY SPECIAL NOTE:

CONSTRUCTION PLAN APPROVAL IS REQUIRED TO DOCUMENT THE DESIGN OF INFRASTRUCTURE TO ADEQUATELY SERVE THE CREATED LOTS. THE APPROVAL ALLOWS THE CONSTRUCTION OF THE SUBDIVISION INFRASTRUCTURE AREAS ONLY, AS SPECIFICALLY DESIGNATED, TO PROCEED BUT IT DOES NOT ALLOW DEVELOPMENT ON THE INDIVIDUAL SUBDIVISION LOTS. NEITHER PRELIMINARY PLAT OR CONSTRUCTION PLAN ALLOW LAND CLEARING/ LAND DISTURBANCE ACTIVITIES AND DEVELOPMENT ON THE INDIVIDUAL SUBDIVISION LOTS AS BUILDING PERMITS FOR THE DWELLINGS WILL BE REQUIRED FOR THESE ACTIVITIES PRIOR, ON EACH LOT/PARCEL IN THE FUTURE.

ENVIRONMENTAL NOTES:

1. ALL VEGETATIVE NATURAL BUFFERS SHALL REMAIN IN NATURAL VEGETATIVE STATE THROUGHOUT THE PROPERTY. THE VNB'S ARE USED TO TREAT THE REAR LOTS FOR STORM WATER TREATMENT.
2. ALL REMAINING WETLANDS & WETLAND BUFFERS, VEGETATIVE NATURAL BUFFERS AND CONSERVATION EASEMENTS SHALL REMAIN UNDISTURBED IN NATURAL VEGETATIVE STATE.

SWALE NOTE:

1. 15' PUBLIC DRAINAGE/ACCESS EASEMENT SWALES ARE TO BE BUILT BY THE SITE CONTRACTOR.
2. 10' PRIVATE DRAINAGE EASEMENT SWALES (BETWEEN LOTS) ARE TO BE BUILT BY HOMEBUILDER

RUNOFF NOTE:

LOTS 19 THRU 35, BLOCK A RUNOFFS FROM ALL IMPERVIOUS SURFACES, INCLUDING ROOF RUNOFFS SHALL BE ROUTED TO THE ROADWAY. THE USE OF GUTTERS IS AN ACCEPTABLE METHOD TO COMPLETE REQUIREMENT. ONLY SODDED REAR YARD AREA MAY BE DIRECTED TOWARDS REAR OF LOT.

REBOL-BATTLE & ASSOCIATES
Civil Engineers and Surveyors
2301 N. Ninth Avenue, Suite 300
Pensacola, Florida 32503
Telephone 850.438.9400 Fax 850.438.0448
EB 00009557 LB7916

NEIGHBORHOOD LOT GRADING PLAN

BROOKHAVEN PHASE 4

A 193 LOT SUBDIVISION
PENSACOLA, FLORIDA

No.	DATE	REVISION

SEAL
NOT FOR CONSTRUCTION

Paul A. Battle
4/15/22

PAUL A. BATTLE, P.E.
No.53126

Dr. By:
Ck By: PAB
Job No.: 2015.035 F
Date: 6/1/2022

DRAWING No.

C3.13

This drawing is the property of Rebol-Battle & Associates, and may not be reproduced without written permission.

2015035\DWG\C3.13 - BROOKHAVEN PHASE 4 CONSTRUCTION DRAWING

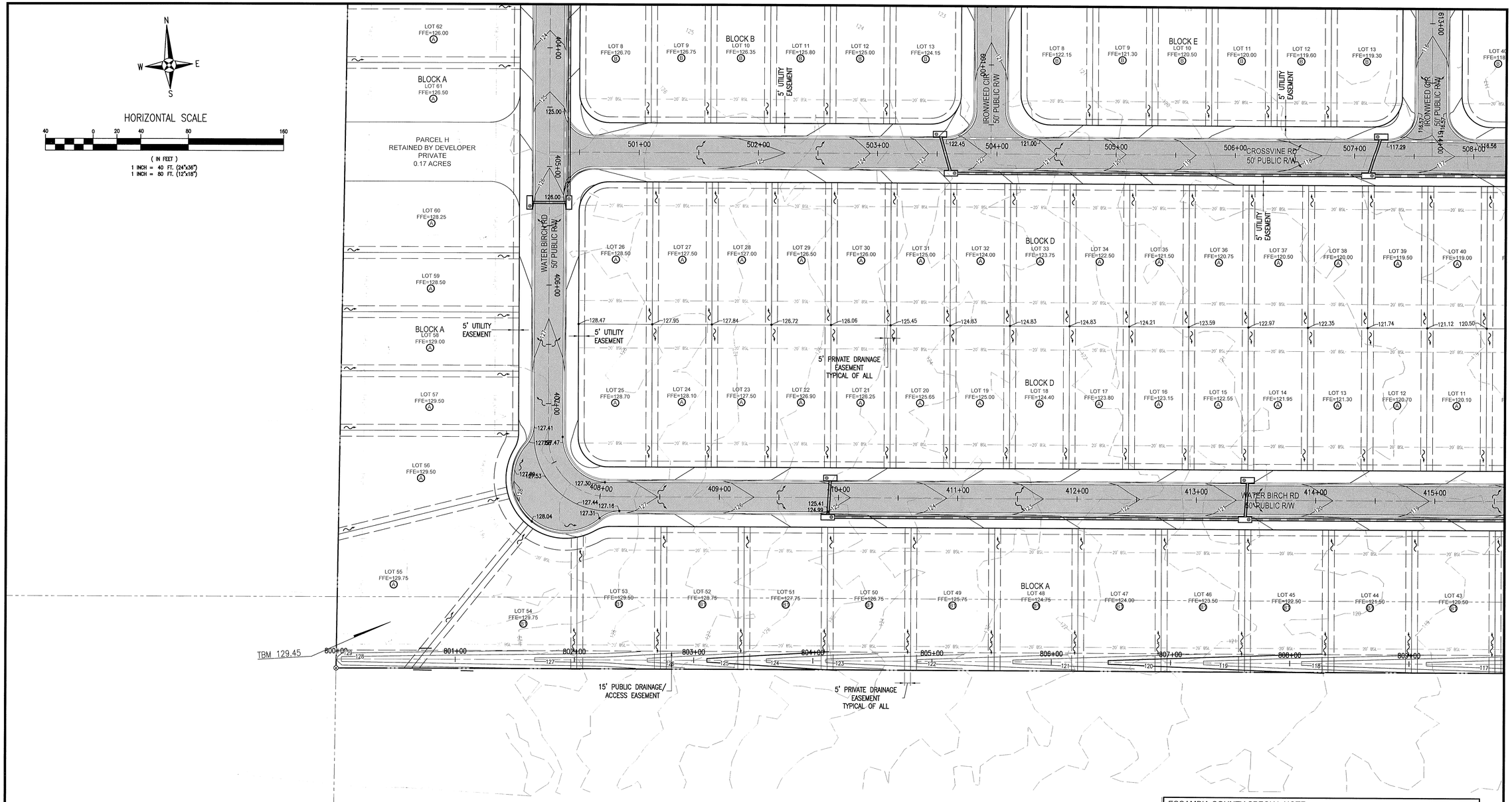

RUNOFF NOTE:
LOTS 19 THRU 35, BLOCK A RUNOFFS FROM ALL IMPERVIOUS SURFACES, INCLUDING ROOF RUNOFFS SHALL BE ROUTED TO THE ROADWAY. THE USE OF GUTTERS IS AN ACCEPTABLE METHOD TO COMPLETE REQUIREMENT. ONLY SODDED REAR YARD AREA MAY BE DIRECTED TOWARDS REAR OF LOT.

SWALE NOTE:
1. 15' PUBLIC DRAINAGE/ACCESS EASEMENT SWALES ARE TO BE BUILT BY THE SITE CONTRACTOR.
2. 10' PRIVATE DRAINAGE EASEMENT SWALES (BETWEEN LOTS) ARE TO BE BUILT BY HOMEBUILDER

ENVIRONMENTAL NOTES:
1. ALL VEGETATIVE NATURAL BUFFERS SHALL REMAIN IN NATURAL VEGETATIVE STATE THROUGHOUT THE PROPERTY. THE VNB'S ARE USED TO TREAT THE REAR LOTS FOR STORM WATER TREATMENT.
2. ALL REMAINING WETLANDS & WETLAND BUFFERS, VEGETATIVE NATURAL BUFFERS AND CONSERVATION EASEMENTS SHALL REMAIN UNDISTURBED IN NATURAL VEGETATIVE STATE.

ESCAMBIA COUNTY SPECIAL NOTE:
CONSTRUCTION PLAN APPROVAL IS REQUIRED TO DOCUMENT THE DESIGN OF INFRASTRUCTURE TO ADEQUATELY SERVE THE CREATED LOTS. THE APPROVAL ALLOWS THE CONSTRUCTION OF THE SUBDIVISION INFRASTRUCTURE AREAS ONLY, AS SPECIFICALLY DESIGNATED, TO PROCEED BUT IT DOES NOT ALLOW DEVELOPMENT ON THE INDIVIDUAL SUBDIVISION LOTS. NEITHER PRELIMINARY PLAT OR CONSTRUCTION PLAN ALLOW LAND CLEARING/ LAND DISTURBANCE ACTIVITIES AND DEVELOPMENT ON THE INDIVIDUAL SUBDIVISION LOTS AS BUILDING PERMITS FOR THE DWELLINGS WILL BE REQUIRED FOR THESE ACTIVITIES PRIOR, ON EACH LOT/PARCEL IN THE FUTURE.

PROPOSED SEQUENCE OF CONSTRUCTION:
1. THE INSTALLATION OF ALL SEDIMENT AND EROSION CONTROL DEVICES THAT CAN BE PLACED PRIOR TO ANY MAJOR SOIL DISTURBANCES.
2. CLEAR AND REMOVE ALL EXISTING VEGETATION IN THOSE AREAS WHERE NECESSARY. ALL REMAINING VEGETATION IS TO BE PROPERLY PROTECTED AND IS TO REMAIN IN ITS NATURAL STATE. TOPSOIL IN AREAS TO BE DISTURBED IS TO BE STRIPPED TO A MINIMUM DEPTH OF SIX (6) INCHES AND STOCKPILED SEPARATELY FROM OTHER EXCAVATED SOIL(S)
3. THE IMMEDIATE INSTALLATION OF ALL REMAINING SEDIMENT AND EROSION CONTROL DEVICES.
4. PERFORM ALL DEMOLITION WORK.
5. CONSTRUCT ROUGH GRADING OF STORMWATER PONDS.
6. CONSTRUCT ALL UNDERGROUND UTILITIES AND STORM DRAIN SYSTEMS.
7. CONSTRUCT ROADS (SUBGRADE, CURB & GUTTER, BASE, PAVEMENT, SIDEWALKS AND LANDSCAPING).
8. UPON THE COMPLETION OF THE CONSTRUCTION ACTIVITIES, PROVIDE RESTORATION, FINE GRADE REMAINDER OF SITE, RESPREAD STOCKPILED TOPSOIL AND STABILIZE WITH PERMANENT VEGETATIVE COVER AND LANDSCAPING.
9. COMPLETE STORMWATER PONDS I.E. INSTALL UNDERDRAIN SYSTEM.
10. THE REMOVAL OF APPROPRIATE TEMPORARY SEDIMENT AND EROSION CONTROL DEVICES.

REBOL-BATTLE & ASSOCIATES
Civil Engineers and Surveyors
2301 N. Ninth Avenue, Suite 300
Pensacola, Florida 32503
Telephone (850) 438-0446 FAX (850) 438-0448
EB 00009857 LB7916

NEIGHBORHOOD LOT GRADING PLAN

BROOKHAVEN PHASE 4
A 193 LOT SUBDIVISION
PENSACOLA, FLORIDA

No.	DATE	REVISION

SEAL
NOT FOR CONSTRUCTION
PAUL A. BATTLE
LICENSE
No. 53128
6/13/22
STATE OF FLORIDA
PAUL A BATTLE, P.E.
No. 53128

Dr. By:
Ck By: PAB
Job No.: 2015.035 F
Date: 6/1/2022

DRAWING No.
C3.14

This drawing is the property of Rebol-Battle & Associates, and may not be reproduced without written permission.

P:\2015\2015.035 (F) - BROOKHAVEN PHASE 4\DRAWINGS\C3.0 GRADING PLAN.DWG

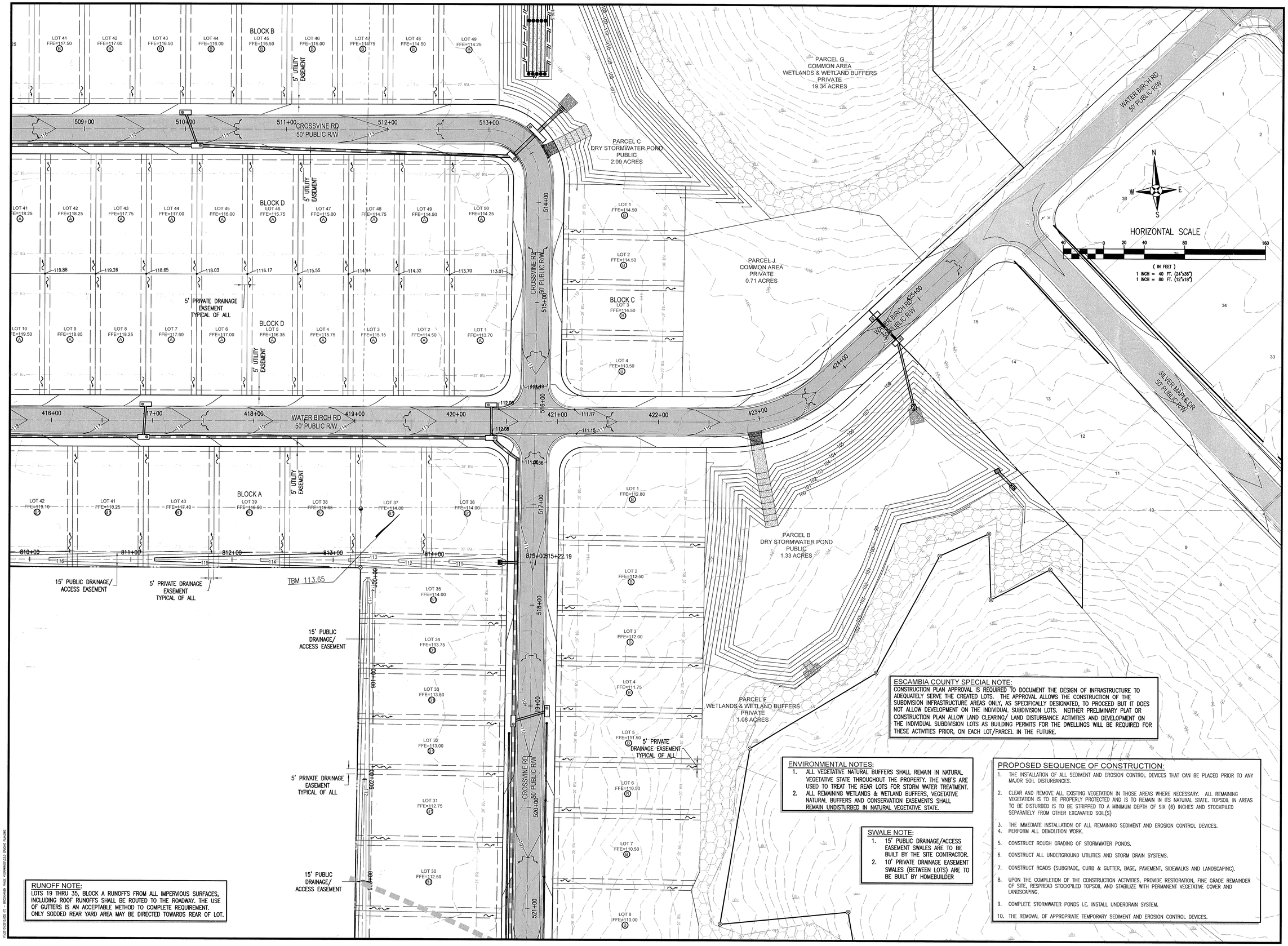

RUNOFF NOTE:
LOTS 19 THRU 35, BLOCK A RUNOFFS FROM ALL IMPERVIOUS SURFACES, INCLUDING ROOF RUNOFFS SHALL BE ROUTED TO THE ROADWAY. THE USE OF GUTTERS IS AN ACCEPTABLE METHOD TO COMPLETE REQUIREMENT. ONLY SODDED REAR YARD AREA MAY BE DIRECTED TOWARDS REAR OF LOT.

ESCAMBIA COUNTY SPECIAL NOTE:
CONSTRUCTION PLAN APPROVAL IS REQUIRED TO DOCUMENT THE DESIGN OF INFRASTRUCTURE TO ADEQUATELY SERVE THE CREATED LOTS. THE APPROVAL ALLOWS THE CONSTRUCTION OF THE SUBDIVISION INFRASTRUCTURE AREAS ONLY, AS SPECIFICALLY DESIGNATED, TO PROCEED BUT IT DOES NOT ALLOW DEVELOPMENT ON THE INDIVIDUAL SUBDIVISION LOTS. NEITHER PRELIMINARY PLAT OR CONSTRUCTION PLAN ALLOW LAND CLEARING/ LAND DISTURBANCE ACTIVITIES AND DEVELOPMENT ON THE INDIVIDUAL SUBDIVISION LOTS AS BUILDING PERMITS FOR THE DWELLINGS WILL BE REQUIRED FOR THESE ACTIVITIES PRIOR, ON EACH LOT/PARCEL IN THE FUTURE.

ENVIRONMENTAL NOTES:
1. ALL VEGETATIVE NATURAL BUFFERS SHALL REMAIN IN NATURAL VEGETATIVE STATE THROUGHOUT THE PROPERTY. THE VNB'S ARE USED TO TREAT THE REAR LOTS FOR STORM WATER TREATMENT.
2. ALL REMAINING WETLANDS & WETLAND BUFFERS, VEGETATIVE NATURAL BUFFERS AND CONSERVATION EASEMENTS SHALL REMAIN UNDISTURBED IN NATURAL VEGETATIVE STATE.

SWALE NOTE:
1. 15' PUBLIC DRAINAGE/ACCESS EASEMENT SWALES ARE TO BE BUILT BY THE SITE CONTRACTOR.
2. 10' PRIVATE DRAINAGE EASEMENT SWALES (BETWEEN LOTS) ARE TO BE BUILT BY HOMEBUILDER

PROPOSED SEQUENCE OF CONSTRUCTION:
1. THE INSTALLATION OF ALL SEDIMENT AND EROSION CONTROL DEVICES THAT CAN BE PLACED PRIOR TO ANY MAJOR SOIL DISTURBANCES.
2. CLEAR AND REMOVE ALL EXISTING VEGETATION IN THOSE AREAS WHERE NECESSARY. ALL REMAINING VEGETATION IS TO BE PROPERLY PROTECTED AND IS TO REMAIN IN ITS NATURAL STATE. TOPSOIL IN AREAS TO BE DISTURBED IS TO BE STRIPPED TO A MINIMUM DEPTH OF SIX (6) INCHES AND STOCKPILED SEPARATELY FROM OTHER EXCAVATED SOIL(S)
3. THE IMMEDIATE INSTALLATION OF ALL REMAINING SEDIMENT AND EROSION CONTROL DEVICES.
4. PERFORM ALL DEMOLITION WORK.
5. CONSTRUCT ROUGH GRADING OF STORMWATER PONDS.
6. CONSTRUCT ALL UNDERGROUND UTILITIES AND STORM DRAIN SYSTEMS.
7. CONSTRUCT ROADS (SUBGRADE, CURB & GUTTER, BASE, PAVEMENT, SIDEWALKS AND LANDSCAPING).
8. UPON THE COMPLETION OF THE CONSTRUCTION ACTIVITIES, PROVIDE RESTORATION, FINE GRADE REMAINDER OF SITE, RESPREAD STOCKPILED TOPSOIL AND STABILIZE WITH PERMANENT VEGETATIVE COVER AND LANDSCAPING.
9. COMPLETE STORMWATER PONDS I.E. INSTALL UNDERDRAIN SYSTEM.
10. THE REMOVAL OF APPROPRIATE TEMPORARY SEDIMENT AND EROSION CONTROL DEVICES.

RBA
REBOL-BATTLE & ASSOCIATES
Civil Engineers and Surveyors
2301 N. Ninth Avenue, Suite 300
Pensacola, Florida 32503
Telephone (850) 438-9661 FAX (850) 438.0448
EB 00009567 LB7916

NEIGHBORHOOD LOT GRADING PLAN

BROOKHAVEN PHASE 4
A 193 LOT SUBDIVISION
PENSACOLA, FLORIDA

No.	DATE	REVISION

SEAL
NOT FOR CONSTRUCTION
PAUL A. BATTLE, P.E.
LICENSE No. 53126
STATE OF FLORIDA
6/15/22
PAUL A BATTLE, P.E.
No. 53126

Dr. By:
Ck By: PAB
Job No.: 2015.035 F
Date: 6/1/2022

DRAWING No.
C3.15

This drawing is the property of Rebol-Battle & Associates, and may not be reproduced without written permission.

2015\2015035 (F) - BROOKHAVEN PHASE 4\DRAWINGS\C3.0 GRADING PLAN.DWG

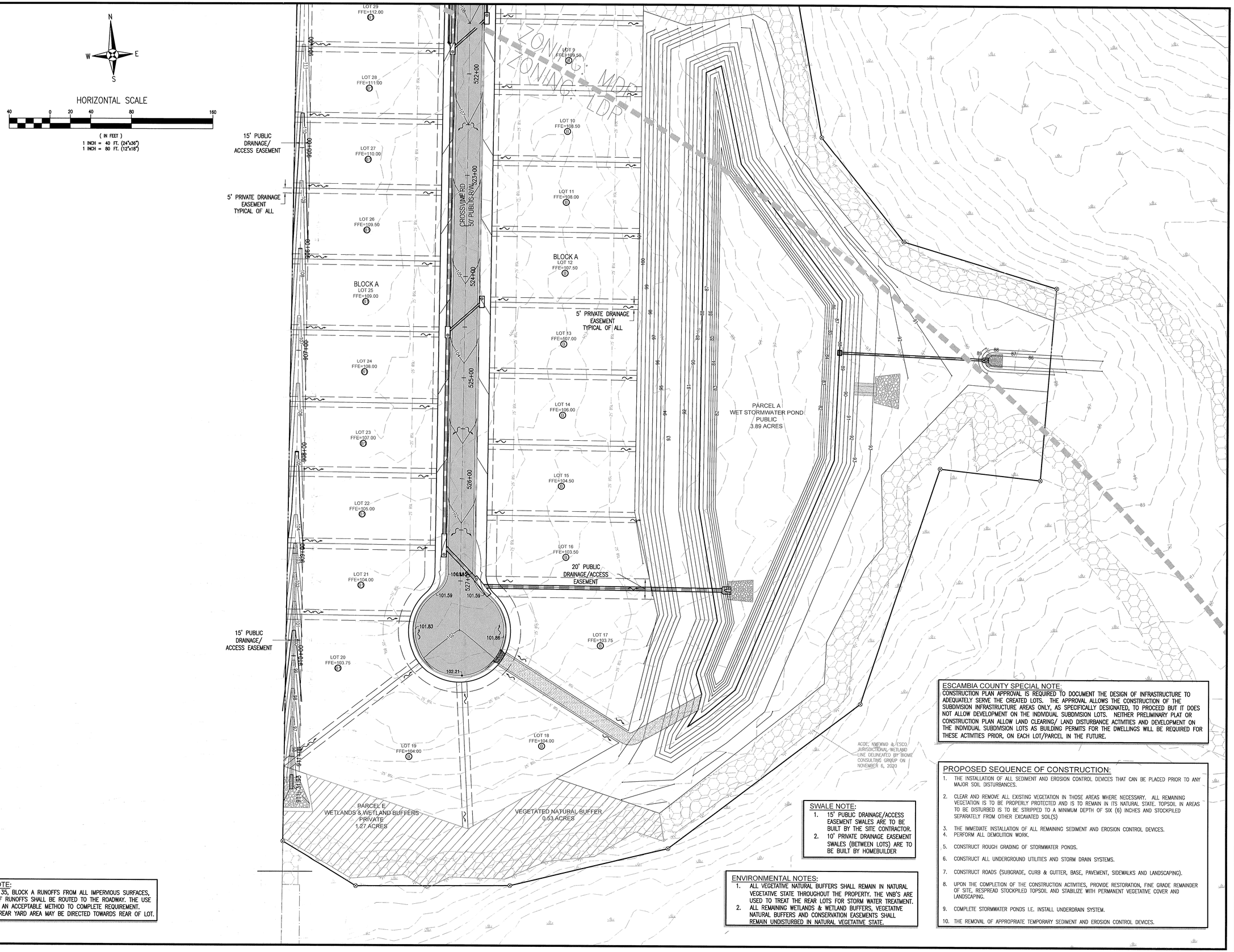

RUNOFF NOTE:
LOTS 19 THRU 35, BLOCK A RUNOFFS FROM ALL IMPERVIOUS SURFACES, INCLUDING ROOF RUNOFFS SHALL BE ROUTED TO THE ROADWAY. THE USE OF GUTTERS IS AN ACCEPTABLE METHOD TO COMPLETE REQUIREMENT. ONLY SODDED REAR YARD AREA MAY BE DIRECTED TOWARDS REAR OF LOT.

ESCAMBIA COUNTY SPECIAL NOTE:
CONSTRUCTION PLAN APPROVAL IS REQUIRED TO DOCUMENT THE DESIGN OF INFRASTRUCTURE TO ADEQUATELY SERVE THE CREATED LOTS. THE APPROVAL ALLOWS THE CONSTRUCTION OF THE SUBDIVISION INFRASTRUCTURE AREAS ONLY, AS SPECIFICALLY DESIGNATED, TO PROCEED BUT IT DOES NOT ALLOW DEVELOPMENT ON THE INDIVIDUAL SUBDIVISION LOTS. NEITHER PRELIMINARY PLAT OR CONSTRUCTION PLAN ALLOW LAND CLEARING/ LAND DISTURBANCE ACTIVITIES AND DEVELOPMENT ON THE INDIVIDUAL SUBDIVISION LOTS AS BUILDING PERMITS FOR THE DWELLINGS WILL BE REQUIRED FOR THESE ACTIVITIES PRIOR, ON EACH LOT/PARCEL IN THE FUTURE.

SWALE NOTE:
1. 15' PUBLIC DRAINAGE/ACCESS EASEMENT SWALES ARE TO BE BUILT BY THE SITE CONTRACTOR.
2. 10' PRIVATE DRAINAGE EASEMENT SWALES (BETWEEN LOTS) ARE TO BE BUILT BY HOMEBUILDER

ENVIRONMENTAL NOTES:
1. ALL VEGETATIVE NATURAL BUFFERS SHALL REMAIN IN NATURAL VEGETATIVE STATE THROUGHOUT THE PROPERTY. THE VNB'S ARE USED TO TREAT THE REAR LOTS FOR STORM WATER TREATMENT.
2. ALL REMAINING WETLANDS & WETLAND BUFFERS, VEGETATIVE NATURAL BUFFERS AND CONSERVATION EASEMENTS SHALL REMAIN UNDISTURBED IN NATURAL VEGETATIVE STATE.

PROPOSED SEQUENCE OF CONSTRUCTION:
1. THE INSTALLATION OF ALL SEDIMENT AND EROSION CONTROL DEVICES THAT CAN BE PLACED PRIOR TO ANY MAJOR SOIL DISTURBANCES.
2. CLEAR AND REMOVE ALL EXISTING VEGETATION IN THOSE AREAS WHERE NECESSARY. ALL REMAINING VEGETATION IS TO BE PROPERLY PROTECTED AND IS TO REMAIN IN ITS NATURAL STATE. TOPSOIL IN AREAS TO BE DISTURBED IS TO BE STRIPPED TO A MINIMUM DEPTH OF SIX (6) INCHES AND STOCKPILED SEPARATELY FROM OTHER EXCAVATED SOIL(S)
3. THE IMMEDIATE INSTALLATION OF ALL REMAINING SEDIMENT AND EROSION CONTROL DEVICES.
4. PERFORM ALL DEMOLITION WORK.
5. CONSTRUCT ROUGH GRADING OF STORMWATER PONDS.
6. CONSTRUCT ALL UNDERGROUND UTILITIES AND STORM DRAIN SYSTEMS.
7. CONSTRUCT ROADS (SUBGRADE, CURB & GUTTER, BASE, PAVEMENT, SIDEWALKS AND LANDSCAPING).
8. UPON THE COMPLETION OF THE CONSTRUCTION ACTIVITIES, PROVIDE RESTORATION, FINE GRADE REMAINDER OF SITE, RESPREAD STOCKPILED TOPSOIL AND STABILIZE WITH PERMANENT VEGETATIVE COVER AND LANDSCAPING.
9. COMPLETE STORMWATER PONDS I.E. INSTALL UNDERDRAIN SYSTEM.
10. THE REMOVAL OF APPROPRIATE TEMPORARY SEDIMENT AND EROSION CONTROL DEVICES.

REBOL-BATTLE & ASSOCIATES
Civil Engineers and Surveyors
2301 N. Ninth Avenue, Suite 300
Pensacola, Florida 32503
Telephone: 850.438.9041 FAX: 850.438.9448
EB 00008657 LB7916

NEIGHBORHOOD LOT GRADING PLAN

BROOKHAVEN PHASE 4
A 193 LOT SUBDIVISION
PENSACOLA, FLORIDA

No.	DATE	REVISION

SEAL
NOT FOR CONSTRUCTION
PAUL A. BATTLE
LICENSED
No. 53126
6/15/22
STATE OF FLORIDA
PAUL A. BATTLE, P.E.
No. 53126

Dr. By:
Ck By: PAB
Job No.: 2015.035 F
Date: 6/1/2022

DRAWING No.
C3.16

This drawing is the property of Rebol-Battle & Associates, and may not be reproduced without written permission.

P:\2015\2015.035 - BROOKHAVEN PHASE 4\DRAWINGS\C3.16 GRADING PLAN.DWG

MINIMUM STANDARDS FOR TYPICAL RESIDENTIAL GRADING CONTROL PLAN

NOTES:

1. A POSITIVE DRAINAGE OUTFALL IS A CONVEYANCE SYSTEM (DRAINAGE EASEMENT, ROADWAY WITH A DRAINAGE SYSTEM ~ CURB & GUTTER, OR DITCH) WHICH CONTAINS, CONTROLS, AND TRANSMITS STORMWATER RUNOFF TO A CREEK, STREAM, RIVER, BAY, GULF, OCEAN, OR OTHER WATERS OF THE STATE, OR WATERS OF THE UNITED STATES, OR TO ANY FUNCTIONING ESCAMBIA COUNTY OR STATE DRAINAGE SYSTEM.
2. FINISH FLOOR ELEVATION SHALL BE AS SPECIFIED BY BUILDING CODE.
3. THESE ARE MINIMAL REQUIREMENTS AND DO NOT RELIEVE THE BUILDER FROM PROVIDING ADDITIONAL GRADING TO DIRECT STORMWATER TO A POSITIVE OUTFALL DRAINAGE SYSTEM AND ELIMINATE NEGATIVE IMPACTS TO ADJACENT LOTS AND PROPERTIES.
4. DISTURBED LOT AREAS SHALL BE COMPLETELY STABILIZED WITH SOD. IF THE HOME IS CONSTRUCTED, STABILIZE THE FIRST 10' WITH SOD AND SOD AND/OR SEED AND MULCH THE REMAINDER OF THE LOT.
5. THE HOMEBUILDER SHALL COMPLY WITH STATE PERMITTING REQUIREMENTS FOR LARGE AND SMALL CONSTRUCTION SITES, SPECIFICALLY THE NPDES PERMITS WHICH REQUIRES A DETAILED STORMWATER POLLUTION PREVENTION PLAN (SWPPP) BEING AVAILABLE ONSITE FOR REVIEW DURING ALL PHASES OF CONSTRUCTION.
6. LOT CLEARING ACTIVITIES SHALL NOT PROCEED WITHOUT BUILDING PERMITS FOR THOSE LOTS EXCLUDING CLEARING REQUIRED FOR CONSTRUCTION OF CONVEYANCE SWALES OR DRAINAGE FEATURES DESIGNATED AS THE DEVELOPER'S RESPONSIBILITY.
7. ALL NEW RUNOFF, DOWNSPOUTS, AND GUTTERS SHALL BE ROUTED TO CARRY ALL STORMWATER TO THE ROADS OR SWALES THAT LEAD TO THE RETENTION POND OR APPROVED DRAINAGE SYSTEM.
8. PROVIDE EROSION CONTROL MEASURES TO ENSURE ALL SEDIMENTS SHALL BE RETAINED ON EACH INDIVIDUAL LOT.
9. WETLANDS SHALL BE PROTECTED WITH FABRIC SILT FENCING AND BURIED HAYBALE SYSTEMS (DOUBLE ROWS AS NECESSARY).

LEGEND:

F.F.E. – FINISH HABITABLE FLOOR ELEVATION
F.G.E. – FINISH GRADE ELEVATION
– STORMWATER FLOW DIRECTION ARROW
– GRADE SLOPE (MINIMUM)
– MINIMUM GRADE

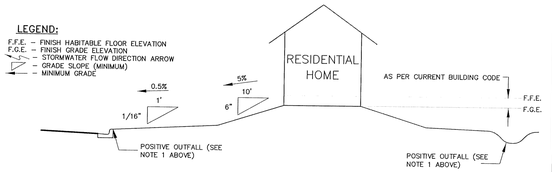

ELEVATION VIEW

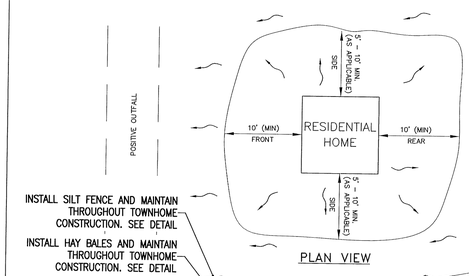

PLAN VIEW

INSTALL SILT FENCE AND MAINTAIN THROUGHOUT TOWNHOME CONSTRUCTION. SEE DETAIL

INSTALL HAY BALES AND MAINTAIN THROUGHOUT TOWNHOME CONSTRUCTION. SEE DETAIL

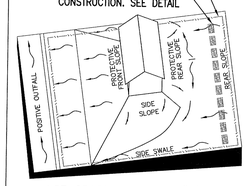

LOT GRADING ~ TYPE "A"
ALL DRAINAGE TO STREET

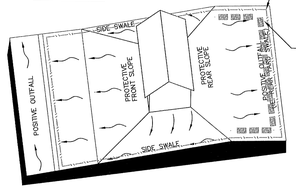

LOT GRADING ~ TYPE "B"
DRAINAGE TO STREET & TO REAR LOT LINE

REVISED SEPT. 15, 2009

NOTE: VARIATIONS IN GRADING ARE ACCEPTABLE IF GRADING DRAINS TO A POSITIVE OUTFALL.

L:\Design_Land\ENGINEERING DETAILS\DETAILS SHEETS\DRIVEWAY_LOT_GRADING_DETAILS_SEPT. 09.dwg

INSTALL HAY BALES AND MAINTAIN THROUGHOUT HOUSE CONSTRUCTION. SEE DETAIL

INSTALL SILT FENCE AND MAINTAIN THROUGHOUT HOUSE CONSTRUCTION. SEE DETAIL

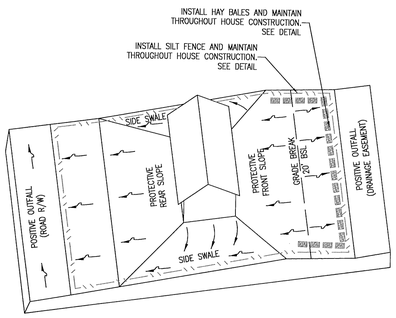

LOT GRADING TYPE 'B1'
DRAINAGE TO STREET & LOT LINE
PORTION OF LOT TO REAR LOT SWALE SHALL BE FROM THE BUILDING SETBACK LINE

NOTE: VARIATIONS IN GRADING ARE ACCEPTABLE IF GRADING DRAINS TO A POSITIVE OUTFALL.

INSTALL HAY BALES AND MAINTAIN THROUGHOUT CONSTRUCTION. SEE DETAIL

INSTALL SILT FENCE AND MAINTAIN THROUGHOUT CONSTRUCTION. SEE DETAIL

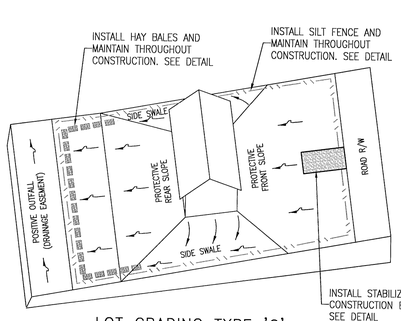

INSTALL STABILIZED CONSTRUCTION ENTRANCE. SEE DETAIL

LOT GRADING TYPE 'C'
THE MAJORITY OF THE LOT SHALL SLOPE TO THE DRAINAGE EASEMENT AT THE REAR OF THE LOT INSTEAD OF THE STREET

NOTE: VARIATIONS IN GRADING ARE ACCEPTABLE IF GRADING DRAINS TO A POSITIVE OUTFALL.

NOTES:

1) ALL MATERIALS AND LABOR FOR INSTALLATION WILL BE THE RESPONSIBILITY OF THE PROPERTY OWNER/CONTRACTOR.
2) DRIVEWAYS ABUTTING PAVED ROADS SHALL BE 1 – ½" ASPHALT WITH 6" STABILIZED SUB GRADE OR 4" TO 6" CONCRETE WITH 4" STABILIZED SUB GRADE – 95% COMPACTION (MODIFIED PROCTOR) WITH LBR 40 BETWEEN EDGE OF ROADWAY AND R/W LINE. COMPACTION AND TESTING IF NECESSARY, THIS WILL BE THE RESPONSIBILITY OF THE OWNER/CONTRACTOR.
3) DRIVEWAYS ABUTTING A DIRT ROAD SHALL BE MILLED ASPHALT, GRADED AGGREGATE BASE, OR WASHED CONCRETE (4" IN DEPTH) ON THE COUNTY MAINTAINED PORTION OF DRIVEWAY.
4) IF NECESSARY, REFER TO FDOT INDEX DETAILS AS REFERENCED BELOW.
5) RADIUS OR FLARE IS REQUIRED FOR TYPE II OR TYPE III CONNECTIONS. SEE DETAIL.
6) PARKING SPACES WITHIN COUNTY RIGHT-OF-WAY SHALL PROVIDE A MINIMUM OF 2 PARKING SPACES.
7) TYPICAL DRIVEWAY SECTIONS ARE TO BE 12' WIDE MINIMUM.

TYPE I

CURB CUT DRIVEWAY FOR COUNTY TYPE "B" LAYBACK CURBS.

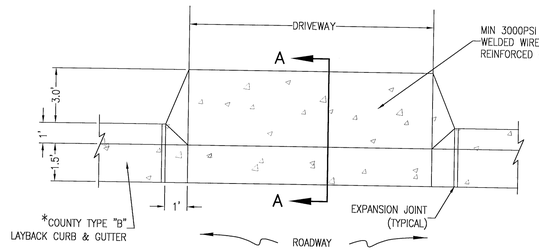

PLAN VIEW

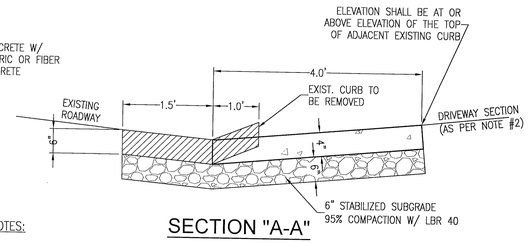

SECTION "A-A"

NOTES:

1.) SEE STANDARD COUNTY CURB DETAILS FOR REFERENCE.

2.) SEE F.D.O.T. INDEX NO. 515 FOR OTHER CONNECTIONS.

* FOR OTHER TYPE CURBS, DIMENSIONS MAY BE ADJUSTED TO FIT.

MAXIMUM LOT SURFACE COVERAGE

50-FT RESIDENTIAL LOTS	3,250 SF (HOUSE & DRIVEWAY)
70-FT RESIDENTIAL LOTS	4,500 SF (HOUSE & DRIVEWAY)

TOTAL IMPERVIOUS SURFACE

NEW INFRASTRUCTURE	217,135 SF (ROADWAY, SIDEWALK, CURB)
NEW INFRASTRUCTURE	683,500 SF (LOTS)
TOTAL IMPERVIOUS AREA FOR POST DEVELOPMENT CONDITIONS	900,635 SF (NEW INFRASTRUCTURE & LOTS)

TYPICAL DRIVEWAY CONNECTION STANDARDS FOR EXISTING ROADWAY CONDITIONS

NOT TO SCALE

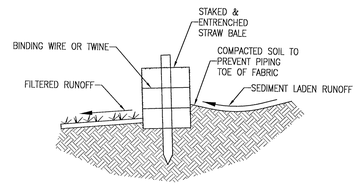

STRAW BALE DETAIL
N.T.S.

NOTE:
WETLANDS SHALL BE PROTECTED WITH FABRIC SILT FENCING AND BURIED HAYBALE SYSTEMS (DOUBLE ROW AS NECESSARY.

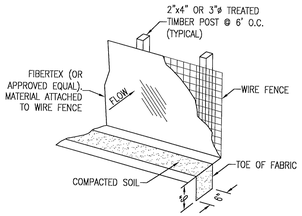

SILT FENCE DETAIL
N.T.S.

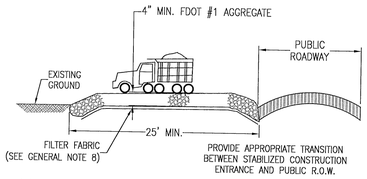

12' WIDE STABILIZED CONSTRUCTION ENTRANCE DETAIL
N.T.S.

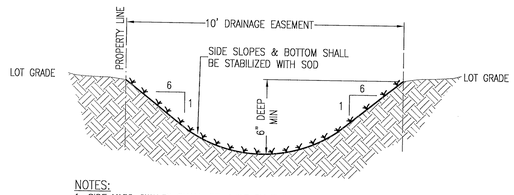

NOTES:
1. SIDE YARD SWALES SHALL BE BUILT BY THE HOMEBUILDER. CONVEYANCE SWALES SHALL BE BUILT BY THE CONTRACTOR.

2. HOME EQUIPMENT (I.E. AC UNITS) SHALL NOT HINDER THE PROPER INSTALLATION AND/OR FUNCTION OF THE SIDE YARD SWALES

3. ALL NEW ROOF RUNOFF, DOWNSPOUTS, AND GUTTERS, SHALL BE ROUTED TO CARRY ALL STORMWATER TO THE ROADS OR SWALES THAT LEAD TO THE RETENTION POND

TYPICAL PRIVATE 10' DRAINAGE EASEMENT SWALE
N.T.S

REBOL-BATTLE & ASSOCIATES
Civil Engineers and Surveyors
2301 N. Ninth Avenue, Suite 300
Pensacola, Florida 32503
Telephone 850.438.9400 Fax 850.438.9448
EB 0006907 LB7195

NEIGHBORHOOD LOT GRADING PLAN DETAILS

BROOKHAVEN PHASE 4
A 193 LOT SUBDIVISION
PENSACOLA, FLORIDA

No.	DATE	REVISION

SEAL
NOT FOR CONSTRUCTION
LICENSED PROFESSIONAL ENGINEER
No. 51129
STATE OF FLORIDA
PAUL A. BATTLE, P.E.

Dr. By:
Ck By: PAB
Job No.: 2015.035 F
Date: 6/1/2022

DRAWING No.
C3.17

This drawing is the property of Rebol-Battle & Associates, and may not be reproduced without written permission.

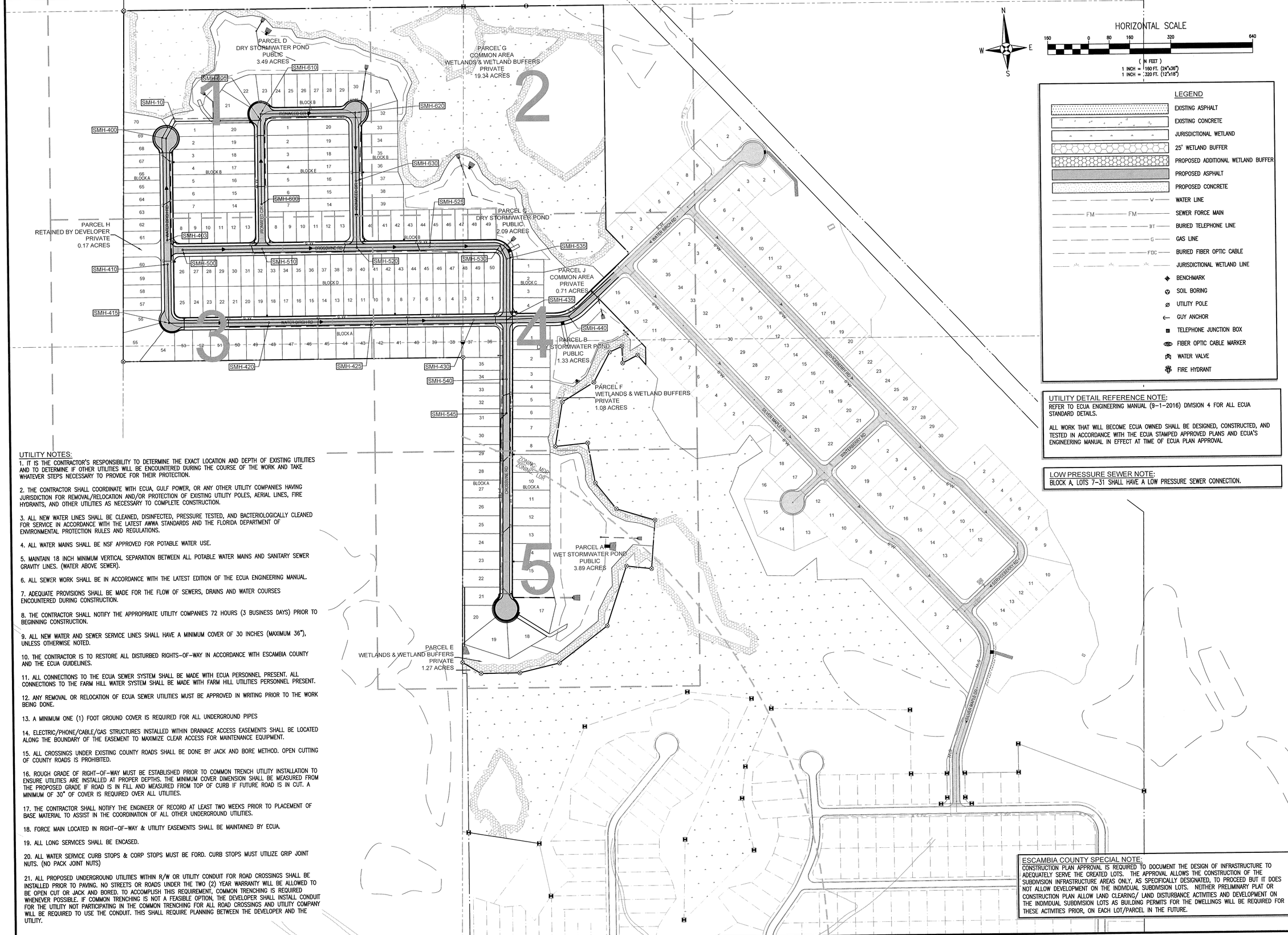

HORIZONTAL SCALE

160 0 80 160 320 640

(IN FEET)

1 INCH = 160 FT. (24"x36")
1 INCH = 320 FT. (12"x18")

LEGEND

- EXISTING ASPHALT
- EXISTING CONCRETE
- JURISDICTIONAL WETLAND
- 25' WETLAND BUFFER
- PROPOSED ADDITIONAL WETLAND BUFFER
- PROPOSED ASPHALT
- PROPOSED CONCRETE
- W — WATER LINE
- FM — FM — SEWER FORCE MAIN
- BT — BURIED TELEPHONE LINE
- G — GAS LINE
- FOC — BURIED FIBER OPTIC CABLE
- JURISDICTIONAL WETLAND LINE
- BENCHMARK
- SOIL BORING
- UTILITY POLE
- GUY ANCHOR
- TELEPHONE JUNCTION BOX
- FIBER OPTIC CABLE MARKER
- WATER VALVE
- FIRE HYDRANT

UTILITY NOTES:

1. IT IS THE CONTRACTOR'S RESPONSIBILITY TO DETERMINE THE EXACT LOCATION AND DEPTH OF EXISTING UTILITIES AND TO DETERMINE IF OTHER UTILITIES WILL BE ENCOUNTERED DURING THE COURSE OF THE WORK AND TAKE WHATEVER STEPS NECESSARY TO PROVIDE FOR THEIR PROTECTION.

2. THE CONTRACTOR SHALL COORDINATE WITH ECUA, GULF POWER, OR ANY OTHER UTILITY COMPANIES HAVING JURISDICTION FOR REMOVAL/RELOCATION AND/OR PROTECTION OF EXISTING UTILITY POLES, AERIAL LINES, FIRE HYDRANTS, AND OTHER UTILITIES AS NECESSARY TO COMPLETE CONSTRUCTION.

3. ALL NEW WATER LINES SHALL BE CLEANED, DISINFECTED, PRESSURE TESTED, AND BACTERIOLOGICALLY CLEANED FOR SERVICE IN ACCORDANCE WITH THE LATEST AWWA STANDARDS AND THE FLORIDA DEPARTMENT OF ENVIRONMENTAL PROTECTION RULES AND REGULATIONS.

4. ALL WATER MAINS SHALL BE NSF APPROVED FOR POTABLE WATER USE.

5. MAINTAIN 18 INCH MINIMUM VERTICAL SEPARATION BETWEEN ALL POTABLE WATER MAINS AND SANITARY SEWER GRAVITY LINES. (WATER ABOVE SEWER).

6. ALL SEWER WORK SHALL BE IN ACCORDANCE WITH THE LATEST EDITION OF THE ECUA ENGINEERING MANUAL.

7. ADEQUATE PROVISIONS SHALL BE MADE FOR THE FLOW OF SEWERS, DRAINS AND WATER COURSES ENCOUNTERED DURING CONSTRUCTION.

8. THE CONTRACTOR SHALL NOTIFY THE APPROPRIATE UTILITY COMPANIES 72 HOURS (3 BUSINESS DAYS) PRIOR TO BEGINNING CONSTRUCTION.

9. ALL NEW WATER AND SEWER SERVICE LINES SHALL HAVE A MINIMUM COVER OF 30 INCHES (MAXIMUM 36"), UNLESS OTHERWISE NOTED.

10. THE CONTRACTOR IS TO RESTORE ALL DISTURBED RIGHTS-OF-WAY IN ACCORDANCE WITH ESCAMBIA COUNTY AND THE ECUA GUIDELINES.

11. ALL CONNECTIONS TO THE ECUA SEWER SYSTEM SHALL BE MADE WITH ECUA PERSONNEL PRESENT. ALL CONNECTIONS TO THE FARM HILL WATER SYSTEM SHALL BE MADE WITH FARM HILL UTILITIES PERSONNEL PRESENT.

12. ANY REMOVAL OR RELOCATION OF ECUA SEWER UTILITIES MUST BE APPROVED IN WRITING PRIOR TO THE WORK BEING DONE.

13. A MINIMUM ONE (1) FOOT GROUND COVER IS REQUIRED FOR ALL UNDERGROUND PIPES

14. ELECTRIC/PHONE/CABLE/GAS STRUCTURES INSTALLED WITHIN DRAINAGE ACCESS EASEMENTS SHALL BE LOCATED ALONG THE BOUNDARY OF THE EASEMENT TO MAXIMIZE CLEAR ACCESS FOR MAINTENANCE EQUIPMENT.

15. ALL CROSSINGS UNDER EXISTING COUNTY ROADS SHALL BE DONE BY JACK AND BORE METHOD. OPEN CUTTING OF COUNTY ROADS IS PROHIBITED.

16. ROUGH GRADE OF RIGHT-OF-WAY MUST BE ESTABLISHED PRIOR TO COMMON TRENCH UTILITY INSTALLATION TO ENSURE UTILITIES ARE INSTALLED AT PROPER DEPTHS. THE MINIMUM COVER DIMENSION SHALL BE MEASURED FROM THE PROPOSED GRADE IF ROAD IS IN FILL AND MEASURED FROM TOP OF CURB IF FUTURE ROAD IS IN CUT. A MINIMUM OF 30" OF COVER IS REQUIRED OVER ALL UTILITIES.

17. THE CONTRACTOR SHALL NOTIFY THE ENGINEER OF RECORD AT LEAST TWO WEEKS PRIOR TO PLACEMENT OF BASE MATERIAL TO ASSIST IN THE COORDINATION OF ALL OTHER UNDERGROUND UTILITIES.

18. FORCE MAIN LOCATED IN RIGHT-OF-WAY & UTILITY EASEMENTS SHALL BE MAINTAINED BY ECUA.

19. ALL LONG SERVICES SHALL BE ENCASED.

20. ALL WATER SERVICE CURB STOPS & CORP STOPS MUST BE FORD. CURB STOPS MUST UTILIZE GRIP JOINT NUTS. (NO PACK JOINT NUTS)

21. ALL PROPOSED UNDERGROUND UTILITIES WITHIN R/W OR UTILITY CONDUIT FOR ROAD CROSSINGS SHALL BE INSTALLED PRIOR TO PAVING. NO STREETS OR ROADS UNDER THE TWO (2) YEAR WARRANTY WILL BE ALLOWED TO BE OPEN CUT OR JACK AND BORED. TO ACCOMPLISH THIS REQUIREMENT, COMMON TRENCHING IS REQUIRED WHENEVER POSSIBLE. IF COMMON TRENCHING IS NOT A FEASIBLE OPTION, THE DEVELOPER SHALL INSTALL CONDUIT FOR THE UTILITY NOT PARTICIPATING IN THE COMMON TRENCHING FOR ALL ROAD CROSSINGS AND UTILITY COMPANY WILL BE REQUIRED TO USE THE CONDUIT. THIS SHALL REQUIRE PLANNING BETWEEN THE DEVELOPER AND THE UTILITY.

UTILITY DETAIL REFERENCE NOTE:

REFER TO ECUA ENGINEERING MANUAL (9-1-2016) DIVISION 4 FOR ALL ECUA STANDARD DETAILS.

ALL WORK THAT WILL BECOME ECUA OWNED SHALL BE DESIGNED, CONSTRUCTED, AND TESTED IN ACCORDANCE WITH THE ECUA STAMPED APPROVED PLANS AND ECUA'S ENGINEERING MANUAL IN EFFECT AT TIME OF ECUA PLAN APPROVAL

LOW PRESSURE SEWER NOTE:

BLOCK A, LOTS 7-31 SHALL HAVE A LOW PRESSURE SEWER CONNECTION.

ESCAMBIA COUNTY SPECIAL NOTE:

CONSTRUCTION PLAN APPROVAL IS REQUIRED TO DOCUMENT THE DESIGN OF INFRASTRUCTURE TO ADEQUATELY SERVE THE CREATED LOTS. THE APPROVAL ALLOWS THE CONSTRUCTION OF THE SUBDIVISION INFRASTRUCTURE AREAS ONLY, AS SPECIFICALLY DESIGNATED, TO PROCEED BUT IT DOES NOT ALLOW DEVELOPMENT ON THE INDIVIDUAL SUBDIVISION LOTS. NEITHER PRELIMINARY PLAT OR CONSTRUCTION PLAN ALLOW LAND CLEARING/ LAND DISTURBANCE ACTIVITIES AND DEVELOPMENT ON THE INDIVIDUAL SUBDIVISION LOTS AS BUILDING PERMITS FOR THE DWELLINGS WILL BE REQUIRED FOR THESE ACTIVITIES PRIOR, ON EACH LOT/PARCEL IN THE FUTURE.

REBOL-BATTLE & ASSOCIATES
Civil Engineers and Surveyors
2301 N. Ninth Avenue, Suite 300
Pensacola, Florida 32503
Telephone 850.438.0400 Fax 850.438.0448
EB 00006657 LB7916

BROOKHAVEN PHASE 4

A 193 LOT SUBDIVISION
PENSACOLA, FLORIDA

UTILITY PLAN

No.	DATE	REVISION

SEAL
NOT FOR CONSTRUCTION
PAUL A. BATTLE
No. 53126
4/15/22
STATE OF FLORIDA
PAUL A. BATTLE, P.E.
No.53126

Dr. By:
Ck By: PAB
Job No.: 2015.035 F
Date: 6/1/2022

DRAWING No.

C4.0

This drawing is the property of Rebol-Battle & Associates, and may not be reproduced without written permission.

ESCAMBIA COUNTY SPECIAL NOTE:
CONSTRUCTION PLAN APPROVAL IS REQUIRED TO DOCUMENT THE DESIGN OF INFRASTRUCTURE TO ADEQUATELY SERVE THE CREATED LOTS. THE APPROVAL ALLOWS THE CONSTRUCTION OF THE SUBDIVISION INFRASTRUCTURE AREAS ONLY, AS SPECIFICALLY DESIGNATED, TO PROCEED BUT IT DOES NOT ALLOW DEVELOPMENT ON THE INDIVIDUAL SUBDIVISION LOTS. NEITHER PRELIMINARY PLAT OR CONSTRUCTION PLAN ALLOW LAND CLEARING/ LAND DISTURBANCE ACTIVITIES AND DEVELOPMENT ON THE INDIVIDUAL SUBDIVISION LOTS AS BUILDING PERMITS FOR THE DWELLINGS WILL BE REQUIRED FOR THESE ACTIVITIES PRIOR, ON EACH LOT/PARCEL IN THE FUTURE.

HORIZONTAL SCALE
40 0 20 40 80 160
(IN FEET)
1 INCH = 40 FT. (24"x36")
1 INCH = 80 FT. (12"x18")

N W E S

PARCEL G
COMMON AREA
WETLANDS & WETLAND BUFFERS
PRIVATE
19.34 ACRES

ACOE, NWFWMD & ESCO JURISDICTIONAL WETLAND LINE DELINEATED BY BIOME CONSULTING GROUP ON NOVEMBER 6, 2020

PARCEL D
DRY STORMWATER POND
PUBLIC
3.49 ACRES

SMH-610
Sta:605+44.27; -20.71L
INSTALL SEWER MANHOLE
TOP EL=112.95
INV IN=108.49 (PS-605)
INV OUT=108.39 (PS-610)

PS-605
INSTALL 25LF OF
8" PVC @ 0.40%

SMH-605
Sta:605+28.18; -5.90L
INSTALL SEWER MANHOLE
TOP EL=113.29
INV IN=108.69 (PS-600)
INV IN=108.69 (PS-10)
INV OUT=108.59 (PS-605)

PS-610
INSTALL 370LF OF
8" PVC @ 0.40%

SMH-620
Sta:608+92.81; -20.71L
INSTALL SEWER MANHOLE
TOP EL=110.85
INV IN=106.91 (PS-610)
INV OUT=106.81 (PS-620)

15' DRAINAGE/ ACCESS EASEMENT

SMH-10
Sta:399+82.87; -36.35L
INSTALL SEWER MANHOLE
TOP EL=114.50
INV IN=110.12 (PS-400)
INV OUT=110.02 (PS-10)

20' UTILITY EASEMENT

INSTALL 3" FLUSH HYDRANT

PS-400
INSTALL 76LF OF
8" PVC @ 2.06%

PS-10
INSTALL 334LF OF
8" PVC @ 0.40%

10' UTILITY EASEMENT

INSTALL 3" PVC WATER MAIN MAINTAIN 30" MIN COVER

SMH-400
Sta:400+50.00; 0.00
INSTALL SEWER MANHOLE
TOP EL=117.49
INV IN=111.79 (PS-403)
INV OUT=111.69 (PS-400)

INSTALL 3" PVC WATER MAIN IN 36 LF OF STEEL CASING

INSTALL (2) 2" PVC CONDUIT AND (1) 4" PVC CONDUIT FOR FUTURE POWER, CABLE, AND TELE-COMMUNICATION INSTALLATION. SEE DETAIL.

INSTALL 1" HDPE LONG WATER SERVICE CONNECTION IN CASING TYPICAL

INSTALL FITTINGS AS NECESSARY.

INSTALL 6"X3" REDUCER & 3"X3"X3" TEE & (3) 3" VALVES

INSTALL FIRE HYDRANT ASSEMBLY

INSTALL 1" HDPE SHORT WATER SERVICE CONNECTION TYPICAL

5' PRIVATE DRAINAGE EASEMENT TYPICAL OF ALL

INSTALL FITTINGS AS NECESSARY.

INSTALL FIRE HYDRANT ASSEMBLY

INSTALL (2) 2" PVC CONDUIT AND (1) 4" PVC CONDUIT FOR FUTURE POWER, CABLE, AND TELE-COMMUNICATION INSTALLATION. SEE DETAIL.

PS-620
INSTALL 268LF OF
8" PVC @ 0.40%

INSTALL 4" PVC SEWER LATERAL TYPICAL

INSTALL 1" HDPE LONG WATER SERVICE CONNECTION IN CASING. TYPICAL.

PS-600
INSTALL 330LF OF
8" PVC @ 1.73%

INSTALL 1" HDPE SHORT WATER SERVICE CONNECTION TYPICAL

INSTALL FIRE HYDRANT ASSEMBLY

INSTALL 4" PVC SEWER LATERAL TYPICAL

PS-403
INSTALL 400LF OF
8" PVC @ 1.05%

SMH-600
Sta:602+00.00; 0.00
INSTALL SEWER MANHOLE
TOP EL=120.20
INV OUT=114.41 (PS-600)

SMH-630
Sta:611+50.00; 0.00
INSTALL SEWER MANHOLE
TOP EL=114.09
INV IN=105.74 (PS-620)
INV OUT=105.64 (PS-630)

PS-630
INSTALL 262LF OF
8" PVC @ 0.40%

5' UTILITY EASEMENT

BLOCK A
BLOCK B
BLOCK E

WATER BIRCH RD
50' PUBLIC R/W

IRONWEED CIR
50' PUBLIC R/W

SEE SHEET C4.2

SEE SHEET C4.3

REBOL-BATTLE & ASSOCIATES
Civil Engineers and Surveyors
2301 N. Ninth Avenue, Suite 300
Pensacola, Florida 32503
Telephone 850.438.0400 Fax 850.438.0448
EB 0000657 LB7916

UTILITY PLAN

BROOKHAVEN PHASE 4
A 193 LOT SUBDIVISION
PENSACOLA, FLORIDA

No.	DATE	REVISION

SEAL
NOT FOR CONSTRUCTION
PAUL A. BATTLE, P.E.
LICENSE
No. 53126
4/15/22
STATE OF FLORIDA
PAUL A. BATTLE, P.E.
No. 53126

Dr. By:
Ck By: PAB
Job No.: 2015.035 F
Date: 6/1/2022

DRAWING No.
C4.1

This drawing is the property of Rebol-Battle & Associates, and may not be reproduced without written permission.

ESCAMBIA COUNTY SPECIAL NOTE:
CONSTRUCTION PLAN APPROVAL IS REQUIRED TO DOCUMENT THE DESIGN OF INFRASTRUCTURE TO ADEQUATELY SERVE THE CREATED LOTS. THE APPROVAL ALLOWS THE CONSTRUCTION OF THE SUBDIVISION INFRASTRUCTURE AREAS ONLY, AS SPECIFICALLY DESIGNATED, TO PROCEED BUT IT DOES NOT ALLOW DEVELOPMENT ON THE INDIVIDUAL SUBDIVISION LOTS. NEITHER PRELIMINARY PLAT OR CONSTRUCTION PLAN ALLOW LAND CLEARING/ LAND DISTURBANCE ACTIVITIES AND DEVELOPMENT ON THE INDIVIDUAL SUBDIVISION LOTS AS BUILDING PERMITS FOR THE DWELLINGS WILL BE REQUIRED FOR THESE ACTIVITIES PRIOR, ON EACH LOT/PARCEL IN THE FUTURE.

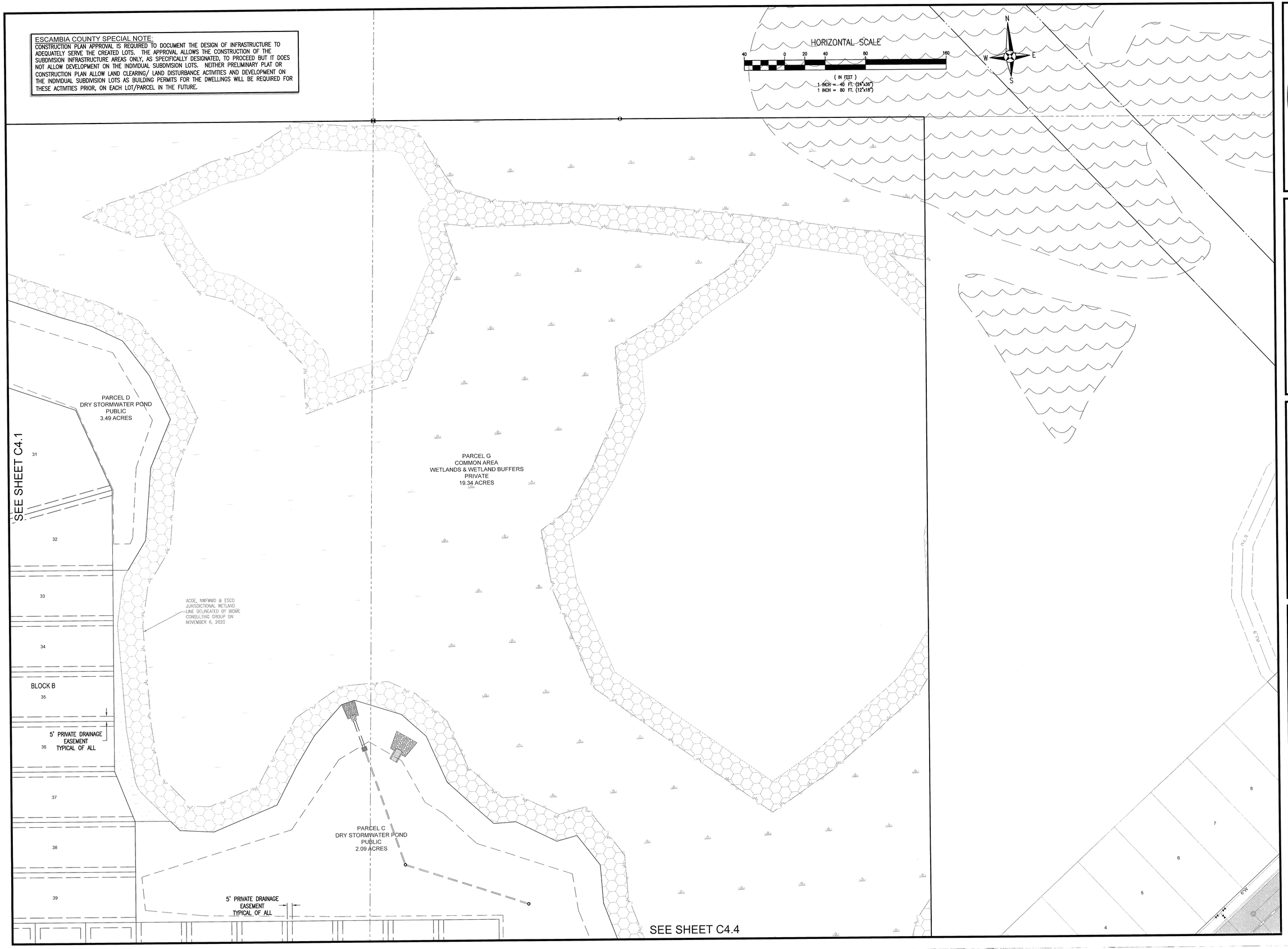

RBA
REBOL-BATTLE & ASSOCIATES
Civil Engineers and Surveyors
2301 N. Ninth Avenue, Suite 300
Pensacola, Florida 32503
Telephone 850.438.0400 Fax 850.438.0448
EB 00009657 LB7916

UTILITY PLAN

BROOKHAVEN PHASE 4
A 193 LOT SUBDIVISION
PENSACOLA, FLORIDA

No.	DATE	REVISION

SEAL
NOT FOR CONSTRUCTION
PAUL A. BATTLE, P.E.
No. 53126

Dr. By:
Ck By: PAB
Job No.: 2015.035 F
Date: 6/1/2022

DRAWING No.
C4.2

This drawing is the property of Rebol-Battle & Associates, and may not be reproduced without written permission.

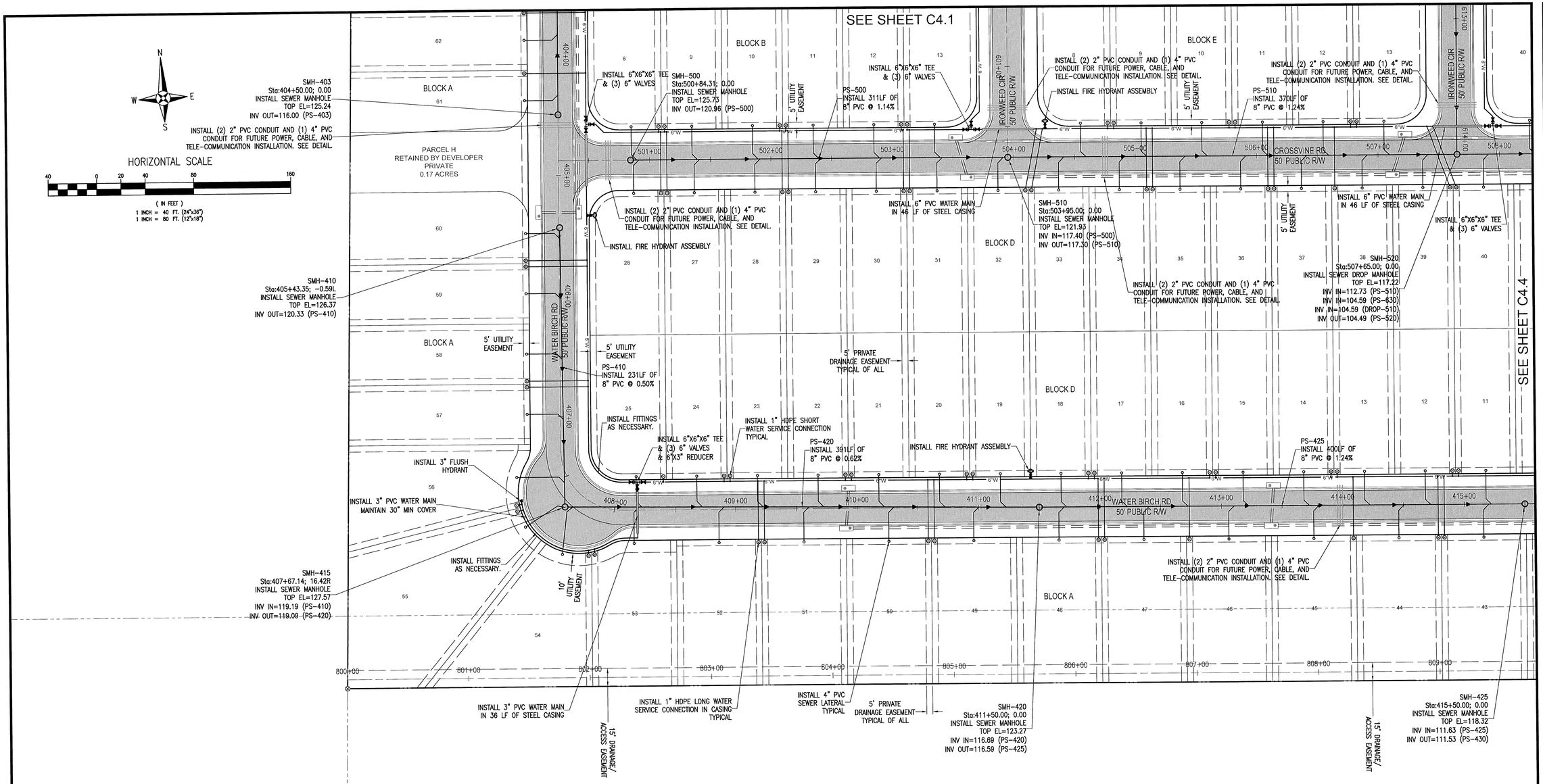

ESCAMBIA COUNTY SPECIAL NOTE:
CONSTRUCTION PLAN APPROVAL IS REQUIRED TO DOCUMENT THE DESIGN OF INFRASTRUCTURE TO ADEQUATELY SERVE THE CREATED LOTS. THE APPROVAL ALLOWS THE CONSTRUCTION OF THE SUBDIVISION INFRASTRUCTURE AREAS ONLY, AS SPECIFICALLY DESIGNATED, TO PROCEED BUT IT DOES NOT ALLOW DEVELOPMENT ON THE INDIVIDUAL SUBDIVISION LOTS. NEITHER PRELIMINARY PLAT OR CONSTRUCTION PLAN ALLOW LAND CLEARING/ LAND DISTURBANCE ACTIVITIES AND DEVELOPMENT ON THE INDIVIDUAL SUBDIVISION LOTS AS BUILDING PERMITS FOR THE DWELLINGS WILL BE REQUIRED FOR THESE ACTIVITIES PRIOR, ON EACH LOT/PARCEL IN THE FUTURE.

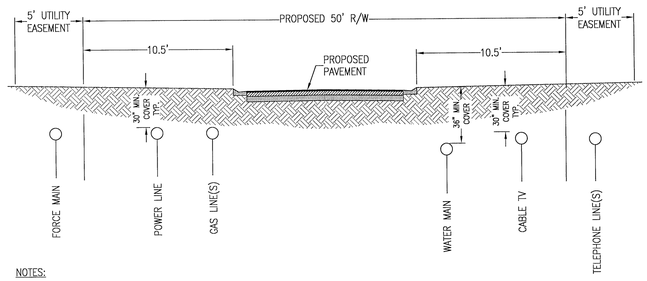

NOTES:

1. NO STREETS OR ROADS WILL BE ALLOWED TO BE OPEN-CUT, OR JACK AND BORED. TO ACCOMPLISH THIS REQUIREMENT, COMMON TRENCHING IS REQUIRED WHENEVER POSSIBLE. IF COMMON TRENCHING IS NOT A FEASIBLE OPTION, THE DEVELOPER SHALL INSTALL CONDUIT FOR THE UTILITY NOT PARTICIPATING IN THE COMMON TRENCHING FOR ALL ROAD CROSSINGS AND THE UTILITY COMPANY WILL BE REQUIRED TO USE THE CONDUIT INSTALLED. THIS SHALL REQUIRE PLANNING BETWEEN THE DEVELOPER AND THE UTILITY.
2. CONTRACTOR SHALL INSTALL EACH UTILITY SERVICE IN THE LOCATION AS SHOWN. DEVIATIONS MUST BE APPROVED BY ESCAMBIA COUNTY.
3. CONTRACTOR SHALL INSTALL POWER LINE ON OPPOSITE SIDE OF ROAD AS DOMESTIC WATER LINE.
4. ALL PROPOSED UNDERGROUND UTILITIES WITHIN R/W'S OR UTILITY CONDUITS FOR ROAD CROSSINGS SHALL BE INSTALLED PRIOR TO PAVING.

COMMON TRENCH DETAIL
N.T.S.

RBA
REBOL-BATTLE & ASSOCIATES
Civil Engineers and Surveyors
2301 N. Ninth Avenue, Suite 300
Pensacola, Florida 32503
Telephone 850.438.0400 Fax 850.438.0448
EB 00009657 LB7916

UTILITY PLAN

BROOKHAVEN PHASE 4
A 193 LOT SUBDIVISION
PENSACOLA, FLORIDA

No.	DATE	REVISION

SEAL
NOT FOR CONSTRUCTION
PAULA A. BATTLE, P.E. LICENSE No. 69126 STATE OF FLORIDA 6/15/22
PAULA A. BATTLE, P.E. No. 69126

Dr. By:
Ck By: PAB
Job No.: 2015.035 F
Date: 6/1/2022

DRAWING No.
C4.3

This drawing is the property of Rebol-Battle & Associates, and may not be reproduced without written permission.

SEE SHEET C4.2

SEE SHEET C4.3

SEE SHEET C4.5

PARCEL G
COMMON AREA
WETLANDS & WETLAND BUFFERS
PRIVATE
19.34 ACRES

HORIZONTAL SCALE
40 0 20 40 80 160
(IN FEET)
1 INCH = 40 FT. (24"x36")
1 INCH = 80 FT. (12"x18")

BLOCK B
BLOCK D
BLOCK C
BLOCK A

CROSSVINE RD
50' PUBLIC R/W

WATER BIRCH RD
50' PUBLIC R/W

SILVER MAPLE DR
50' PUBLIC R/W

PS-520
INSTALL 285LF OF
8" PVC @ 0.40%

INSTALL FIRE HYDRANT ASSEMBLY

SMH-525
Sta:510+50.00; 0.00
INSTALL SEWER MANHOLE
TOP EL=114.03
INV IN=103.35 (PS-520)
INV OUT=103.25 (PS-525)

PS-525
INSTALL 275LF OF
8" PVC @ 0.40%

SMH-530
Sta:513+22.96; -6.00L
INSTALL SEWER MANHOLE
TOP EL=112.18
INV IN=102.15 (PS-525)
INV OUT=102.05 (PS-530)

INSTALL FITTINGS
AS NECESSARY.

SMH-535
Sta:513+78.79; 0.00
INSTALL SEWER MANHOLE
TOP EL=112.38
INV IN=101.82 (PS-530)
INV OUT=101.72 (PS-535)

INSTALL (2) 2" PVC CONDUIT AND (1) 4" PVC
CONDUIT FOR FUTURE POWER, CABLE, AND
TELE-COMMUNICATION INSTALLATION. SEE DETAIL.

PS-530
INSTALL 56LF OF
8" PVC @ 0.40%

5' UTILITY EASEMENT

5' PRIVATE DRAINAGE EASEMENT
TYPICAL OF ALL

PS-535
INSTALL 239LF OF
8" PVC @ 0.40%

INSTALL 6" CROSS
& (4) 6" VALVES

INSTALL 1" HDPE SHORT
WATER SERVICE CONNECTION
TYPICAL

PS-430
INSTALL 400LF OF
8" PVC @ 1.24%

INSTALL 6" PVC WATER MAIN
IN 46 LF OF STEEL CASING

PS-440
INSTALL 243LF OF
8" PVC @ 0.40%

PARCEL C
DRY STORMWATER POND
PUBLIC
2.09 ACRES

CONTRACTOR SHALL
PLUG SEWER MAIN
CONNECTION DURING
CONSTRUCTION

CONNECT TO EXISTING
WATER MAIN. REMOVE
FLUSH HYDRANT AT
TIME OF CONNECTION.

CONNECT TO EXISTING
SEWER STUBOUT

PS-445
INSTALL 218LF OF
8" PVC @ 0.40%

SMH-440
Sta:423+22.02; 0.00
INSTALL SEWER MANHOLE
TOP EL=109.40
INV IN=99.69 (PS-440)
INV OUT=99.59 (PS-445)

PS-435
INSTALL 128LF OF
8" PVC @ 2.98%

SMH-435
Sta:420+77.93; 0.00
INSTALL SEWER MANHOLE
TOP EL=111.80
INV IN=102.66 (PS-435)
INV IN=100.76 (PS-535)
INV IN=100.76 (PS-540)
INV OUT=100.66 (PS-440)

PS-540
INSTALL 232LF OF
8" PVC @ 0.40%

SMH-430
Sta:419+50.00; 0.00
INSTALL SEWER MANHOLE
TOP EL=113.38
INV IN=106.57 (PS-430)
INV OUT=106.47 (PS-435)

INSTALL 4" PVC
SEWER LATERAL
TYPICAL

15' DRAINAGE/
ACCESS EASEMENT

SMH-540
Sta:518+50.00; 0.00
INSTALL SEWER MANHOLE
MANHOLE TO BE LINED
TOP EL=110.54
INV IN=101.79 (PS-545)
INV OUT=101.69 (PS-540)

PS-545
INSTALL 133LF OF
8" PVC @ 0.40%

SMH-545
Sta:519+83.07; 0.00
INSTALL SEWER MANHOLE
MANHOLE TO BE LINED
TOP EL=109.67
INV OUT=102.32 (PS-545)

CONNECT FORCE MAIN
TO SEWER MANHOLE

INSTALL 3" FORCE MAIN
MAINTAIN 36" MIN COVER

PARCEL B
DRY STORMWATER POND
PUBLIC
1.33 ACRES

PARCEL F
WETLANDS & WETLAND BUFFERS
PRIVATE
1.08 ACRES

ACOE, NWFWMD & ESCO
JURISDICTIONAL WETLAND
LINE DELINEATED BY BOWE
CONSULTING GROUP ON
NOVEMBER 6, 2020

ESCAMBIA COUNTY SPECIAL NOTE:
CONSTRUCTION PLAN APPROVAL IS REQUIRED TO DOCUMENT THE DESIGN OF INFRASTRUCTURE TO ADEQUATELY SERVE THE CREATED LOTS. THE APPROVAL ALLOWS THE CONSTRUCTION OF THE SUBDIVISION INFRASTRUCTURE AREAS ONLY, AS SPECIFICALLY DESIGNATED, TO PROCEED BUT IT DOES NOT ALLOW DEVELOPMENT ON THE INDIVIDUAL SUBDIVISION LOTS. NEITHER PRELIMINARY PLAT OR CONSTRUCTION PLAN ALLOW LAND CLEARING/ LAND DISTURBANCE ACTIVITIES AND DEVELOPMENT ON THE INDIVIDUAL SUBDIVISION LOTS AS BUILDING PERMITS FOR THE DWELLINGS WILL BE REQUIRED FOR THESE ACTIVITIES PRIOR, ON EACH LOT/PARCEL IN THE FUTURE.

REBOL-BATTLE & ASSOCIATES
Civil Engineers and Surveyors
2301 N. Ninth Avenue, Suite 200
Pensacola, Florida 32503
Telephone 850.438.0400 Fax 850.438.0448
EB 0000695 LB7916

BROOKHAVEN PHASE 4
A 193 LOT SUBDIVISION
PENSACOLA, FLORIDA

UTILITY PLAN

No.	DATE	REVISION

SEAL
NOT FOR CONSTRUCTION
PAUL A. BATTLE, P.E.
No. 53126
6/15/22
STATE OF FLORIDA
PAUL A. BATTLE, P.E.
No. 53126

Dr. By:
Ck By: PAB
Job No.: 2015.035 F
Date: 6/1/2022

DRAWING No.
C4.4

This drawing is the property of Rebol-Battle & Associates, and may not be reproduced without written permission.

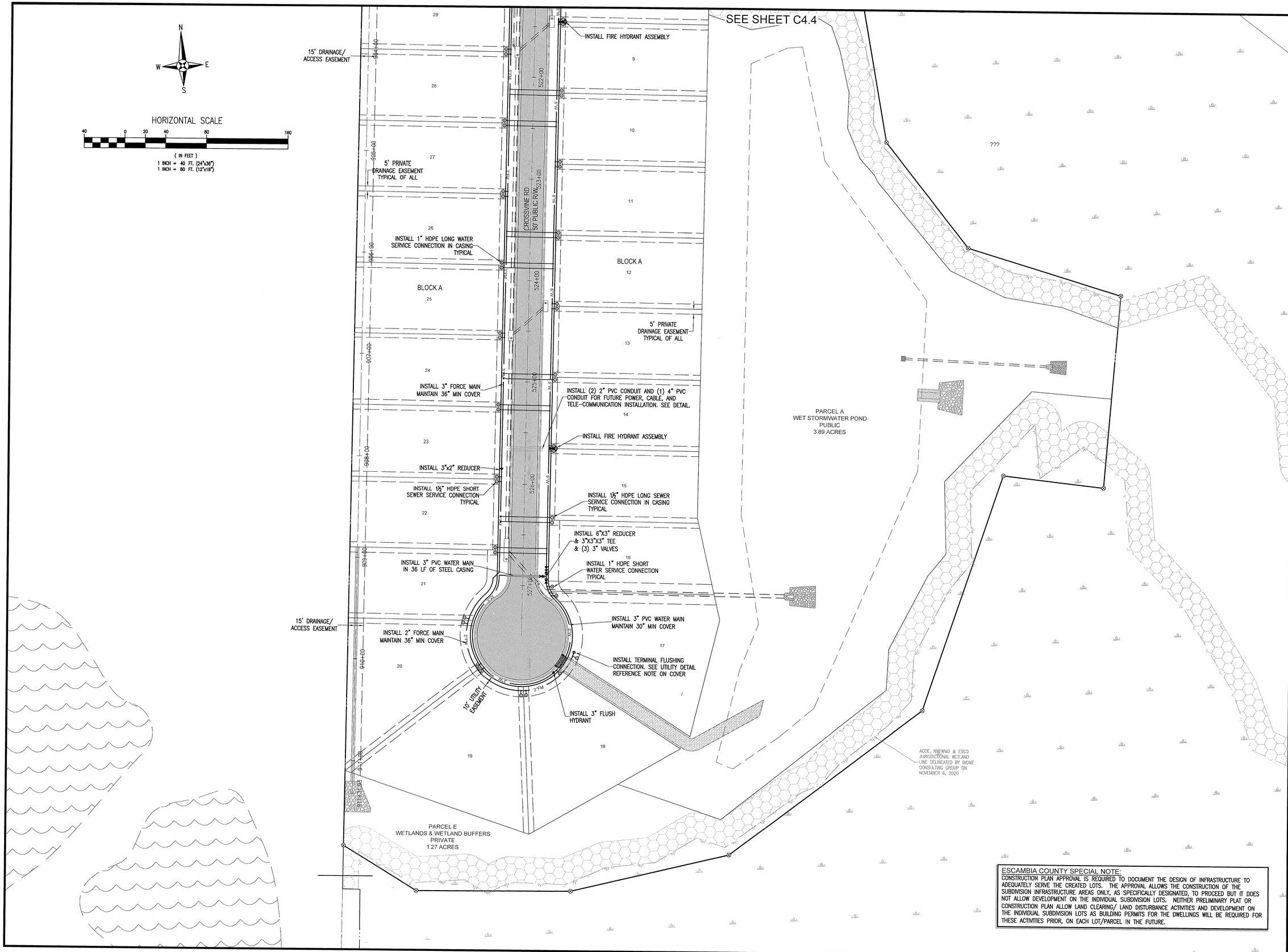

ESCAMBIA COUNTY SPECIAL NOTE:
CONSTRUCTION PLAN APPROVAL IS REQUIRED TO DOCUMENT THE DESIGN OF INFRASTRUCTURE TO ADEQUATELY SERVE THE CREATED LOTS. THE APPROVAL ALLOWS THE CONSTRUCTION OF THE SUBDIVISION INFRASTRUCTURE AREAS ONLY, AS SPECIFICALLY DESIGNATED, TO PROCEED BUT IT DOES NOT ALLOW DEVELOPMENT ON THE INDIVIDUAL SUBDIVISION LOTS. NEITHER PRELIMINARY PLAT OR CONSTRUCTION PLAN ALLOW LAND CLEARING/ LAND DISTURBANCE ACTIVITIES AND DEVELOPMENT ON THE INDIVIDUAL SUBDIVISION LOTS AS BUILDING PERMITS FOR THE DWELLINGS WILL BE REQUIRED FOR THESE ACTIVITIES PRIOR, ON EACH LOT/PARCEL IN THE FUTURE.

RBA
REBOL-BATTLE & ASSOCIATES
Civil Engineers and Surveyors
2301 N. Ninth Avenue, Suite 300
Pensacola, Florida 32503
Telephone 850.438.0400 Fax 850.438.0448
EB 00009657 LB7916

UTILITY PLAN

BROOKHAVEN PHASE 4
A 193 LOT SUBDIVISION
PENSACOLA, FLORIDA

No.	DATE	REVISION

SEAL
NOT FOR CONSTRUCTION
LICENSED PROFESSIONAL ENGINEER
No. 53126
6/15/22
STATE OF FLORIDA
PAUL A. BATTLE, P.E.
No. 53126

Dr. By:
Ck By: PAB
Job No.: 2015.035 F
Date: 6/1/2022

DRAWING No.
C4.5

This drawing is the property of Rebol-Battle & Associates, and may not be reproduced without written permission.

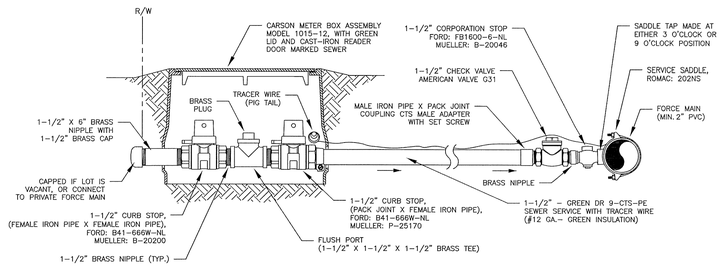

NOTES:

1. THIS DETAIL APPLIES TO ALL 1-1/2" LOW PRESSURE SEWER SERVICES, RESIDENTIAL AND COMMERCIAL.
2. EACH CUSTOMER SHALL HAVE A SEPARATE SERVICE. SERVICES SHALL BE LOCATED ON OPPOSITE LOT LINE FROM WATER METERS PER APPROVED PLANS. CONSULT WITH ECUA INSPECTOR IF UNCLEAR.
3. GRINDER STATION SHALL BE OWNED AND MAINTAINED BY THE PROPERTY OWNER.
4. EACH GRINDER PUMP SHALL BE CAPABLE OF DELIVERING 12 GPM AT A MINIMUM HEAD CONDITION OF 115' (50 PSI) OR MORE, UNLESS OTHERWISE APPROVED BY ECUA ENGINEERING. PUMP SHALL BE SIZED AND SPECIFIED BY THE ENGINEER OF RECORD WITH SELECTION SHOWN ON ECUA APPROVED PLANS, AND PLUMBERS/SUPPLIERS SHALL SUPPLY PUMP THAT MEETS OR EXCEEDS SAID SELECTION BASED ON SITE CONDITIONS. A CHECK VALVE AND BALL VALVE SHALL BE SUPPLIED AT THE GRINDER STATION.
5. IF SERVICE IS INSTALLED UNDER ROAD, THEN A 3" HDPE SDR 17 GREEN, OR 3" HDPE SDR 17 GREEN-STRIPED CASING SHALL BE INSTALLED.

EMERALD COAST UTILITIES AUTHORITY

SCALE: N.T.S.
DATE: 8/04/2021

1-1/2" LOW PRESSURE SEWER SERVICE

DETAIL D-20

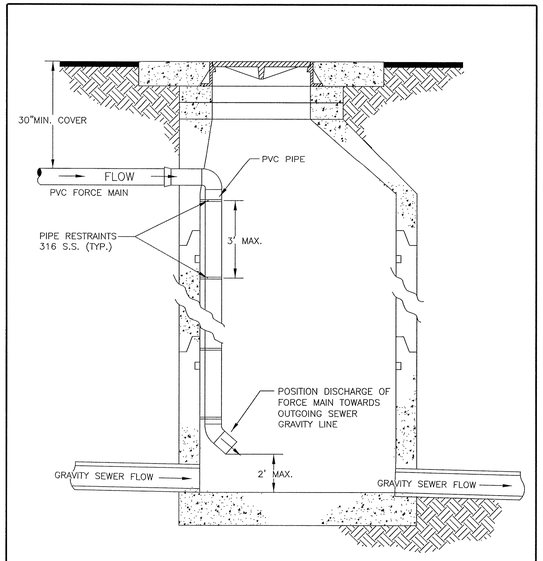

NOTES:
1- FORCEMAIN UP TO 4".
2- LARGER FORCEMAIN: OUTSIDE DROP CONNECTION

EMERALD COAST UTILITIES AUTHORITY

SCALE: N.T.S.
DATE: 9/01/2016

FORCE MAIN CONNECTION TO MANHOLE

DETAIL D-21

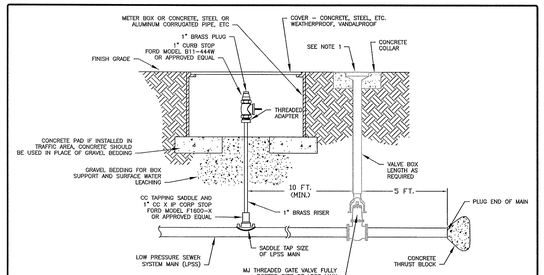

NOTES:

1. TERMINAL FLUSHING CONNECTIONS OF 2" WILL NOT REQUIRE THE VALVE AND PIPING FOR FUTURE EXPANSION.

TERMINAL FLUSHING CONNECTION

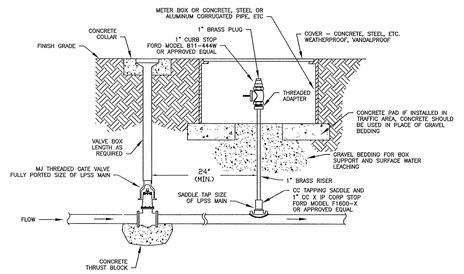

INLINE FLUSHING CONNECTION

EMERALD COAST UTILITIES AUTHORITY

SCALE: N.T.S.
DATE: 9/01/2016

LOW PRESSURE FLUSHING CONNECTIONS

DETAIL D-22

REBOL-BATTLE & ASSOCIATES
Civil Engineers and Surveyors
2301 N. Ninth Avenue, Suite 300
Pensacola, Florida 32503
Telephone 850.438.0400 Fax 850.438.0448
EB 00009697 LB7916

UTILITY PLAN

BROOKHAVEN PHASE 4
A 193 LOT SUBDIVISION
PENSACOLA, FLORIDA

No.	DATE	REVISION

SEAL
NOT FOR CONSTRUCTION
LICENSE
No. 63126
STATE OF FLORIDA
PAUL A. BATTLE, P.E.
No.63126

Dr. By:
Ck By: PAB
Job No.: 2015.035 F
Date: 6/1/2022

DRAWING No.
C4.6

This drawing is the property of Rebol-Battle & Associates, and may not be reproduced without written permission.

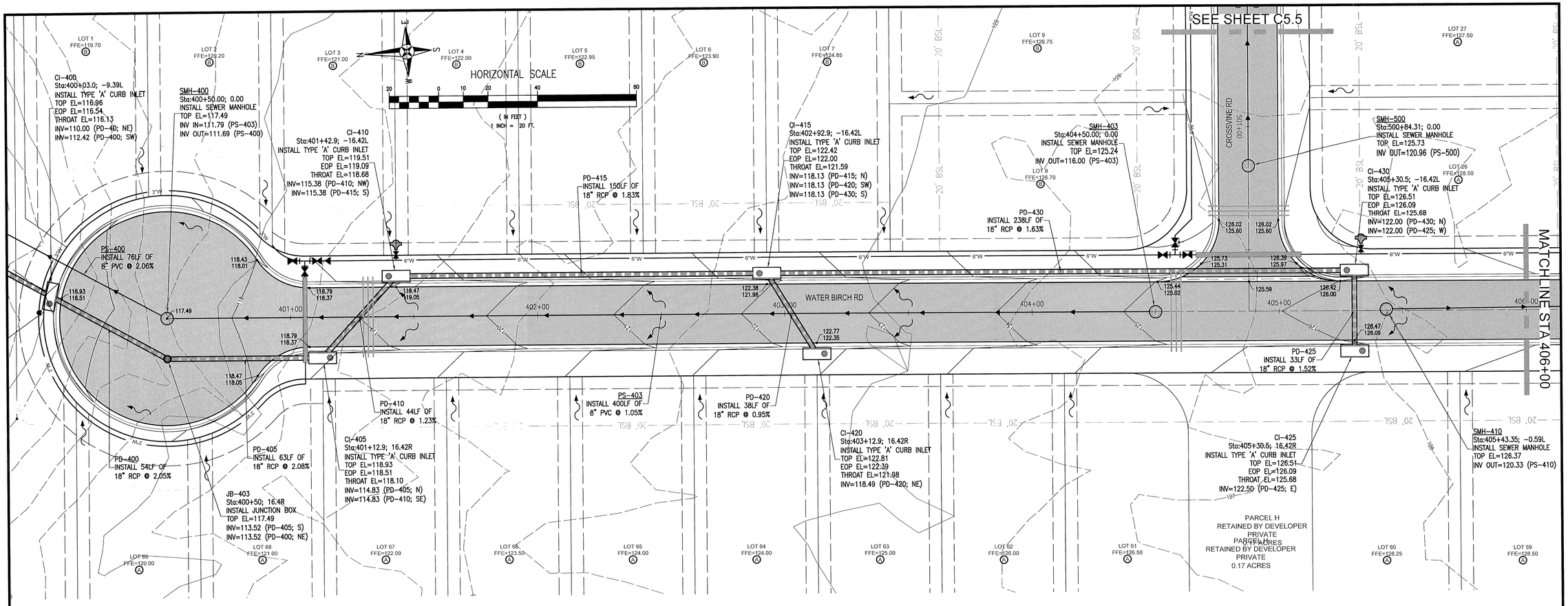

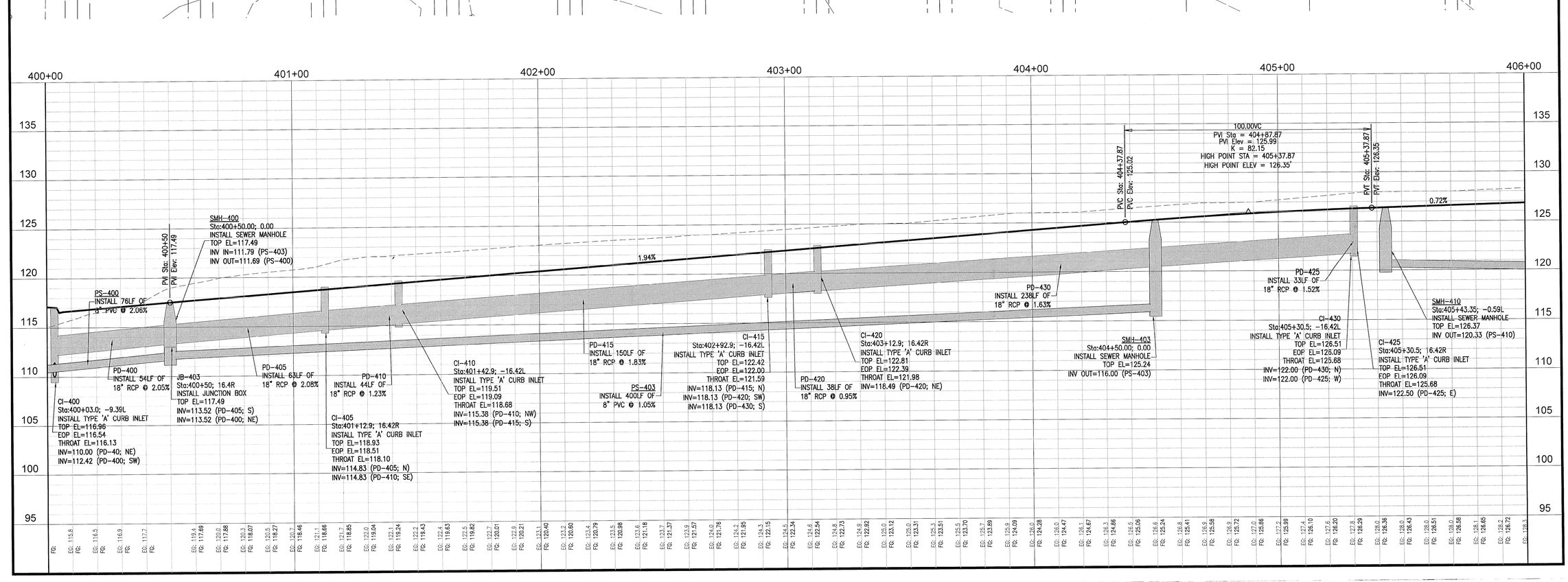

REBOL-BATTLE & ASSOCIATES
Civil Engineers and Surveyors
2301 N. Ninth Avenue, Suite 300
Pensacola, Florida 32503-2644
Telephone 850.438.0400 Fax 850.438.0448
EB 00009857 LB7916

PLAN & PROFILE

BROOKHAVEN PHASE 4
A 193 LOT SUBDIVISION
PENSACOLA, FLORIDA

No.	DATE	REVISION

SEAL
NOT FOR CONSTRUCTION
STATE OF FLORIDA LICENSE
PAUL A. BATTLE, P.E.
No. 68126
4/5/22
STATE OF FLORIDA
PAUL A. BATTLE, P.E.
No. 68126

Dr. By:
Ck By: PAB
Job No.: 2015.035 F
Date: 6/1/2022

DRAWING No.
C5.0

This drawing is the property of Rebol-Battle & Associates, and may not be reproduced without written permission.

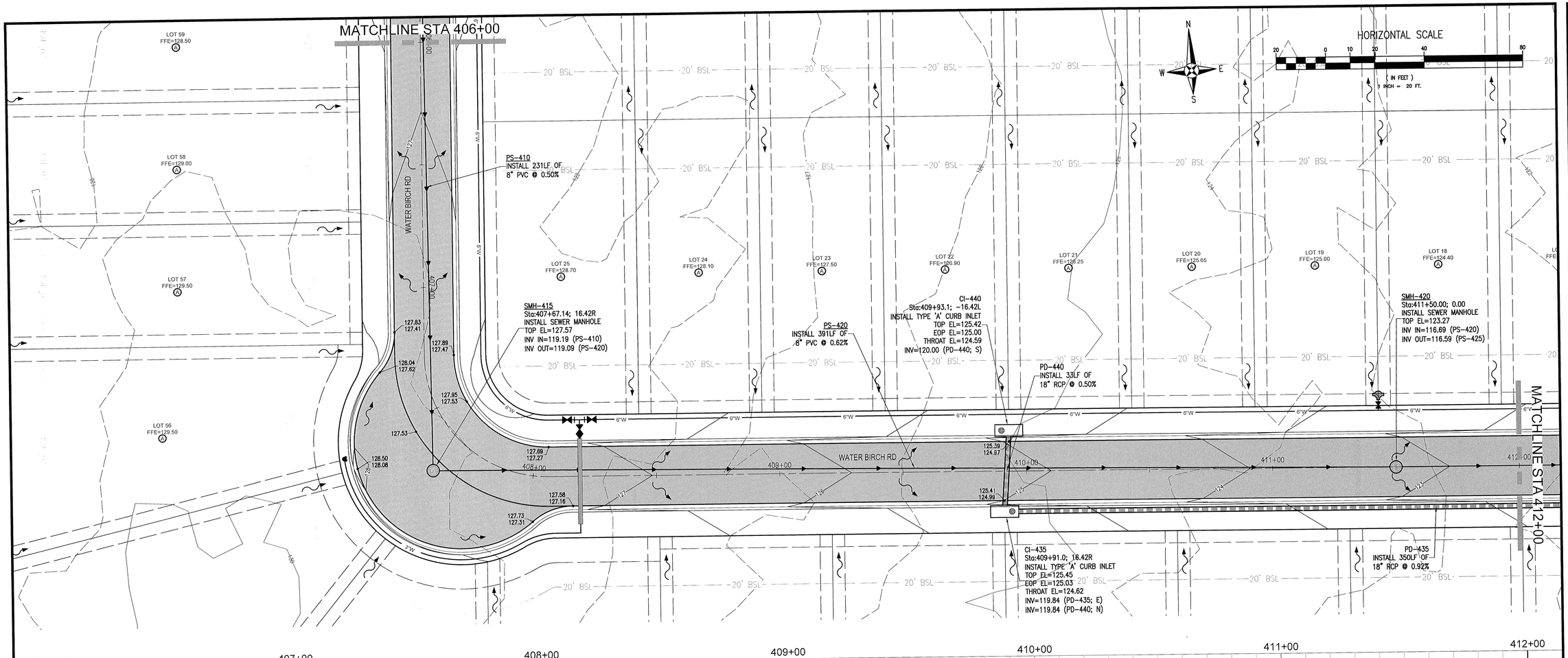

REBOL-BATTLE & ASSOCIATES
Civil Engineers and Surveyors
2301 N. Ninth Avenue, Suite 300
Pensacola, Florida 32503
Telephone 850.438.9400 Fax 850.438.0448
EB 00009697 LB7916

PLAN & PROFILE

BROOKHAVEN PHASE 4
A 193 LOT SUBDIVISION
PENSACOLA, FLORIDA

No.	DATE	REVISION

SEAL
NOT FOR CONSTRUCTION
PAUL A. BATTLE LICENSE No. 63128 STATE OF FLORIDA
6/1/22
PAUL A. BATTLE, P.E. No.63128

Dr. By:
Ck By: PAB
Job No.: 2015.035 F
Date: 6/1/2022

DRAWING No.
C5.1

This drawing is the property of Rebol-Battle & Associates, and may not be reproduced without written permission.

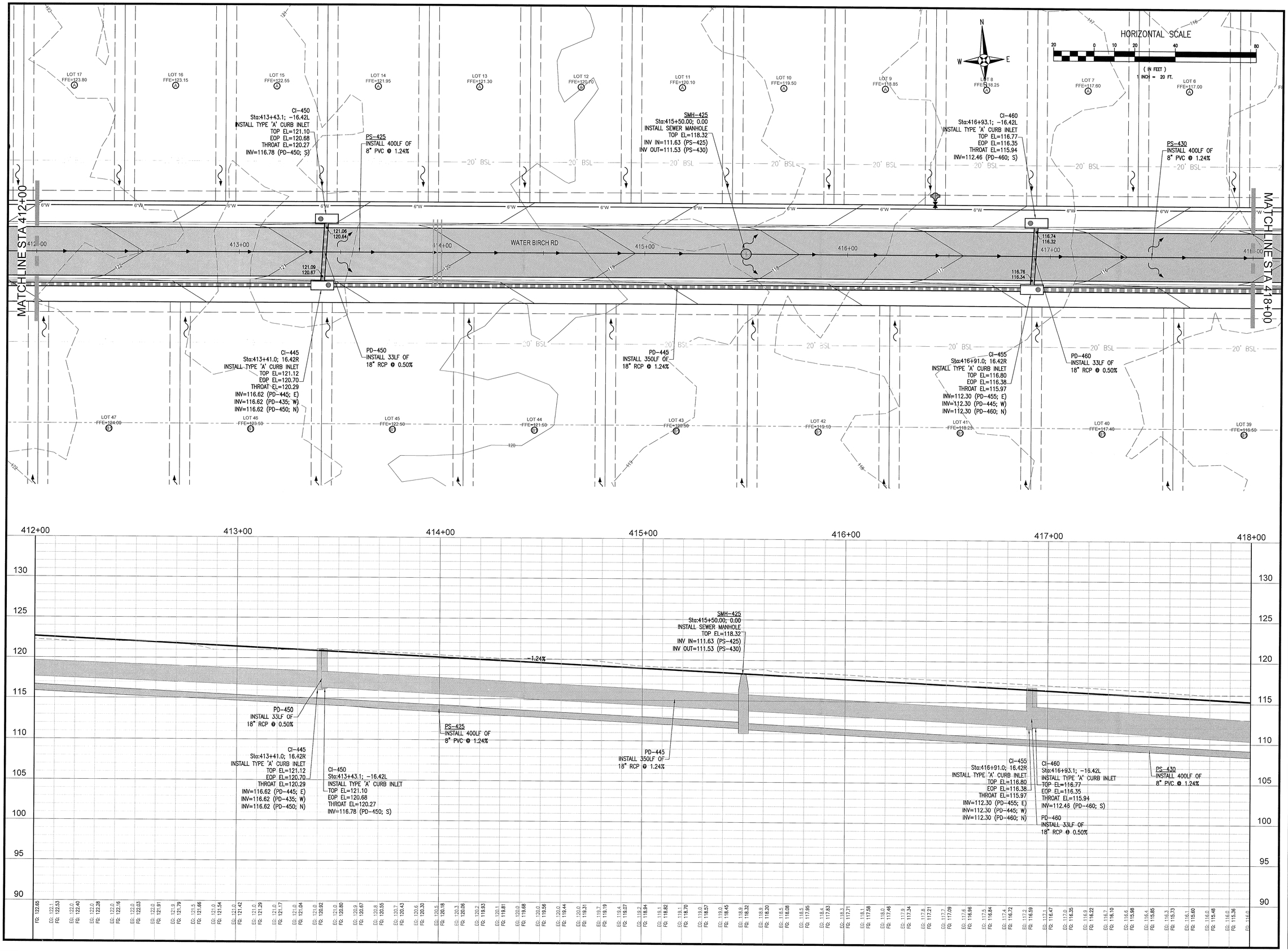

REBOL-BATTLE & ASSOCIATES
Civil Engineers and Surveyors
2301 N. Ninth Avenue, Suite 300
Pensacola, Florida 32503
Telephone 850.438.0400 Fax 850.438.0448
EB 00009857 LB7916

PLAN & PROFILE

BROOKHAVEN PHASE 4
A 193 LOT SUBDIVISION
PENSACOLA, FLORIDA

No.	DATE	REVISION

SEAL
NOT FOR CONSTRUCTION
PAUL A. BATTLE
LICENSED
No. 53126
6/1/22
STATE OF
PAUL A. BATTLE, P.E.
No. 53126

Dr. By:
Ck By: PAB
Job No.: 2015.035 F
Date: 6/1/2022

DRAWING No.
C5.2

This drawing is the property of Rebol-Battle & Associates, and may not be reproduced without written permission.

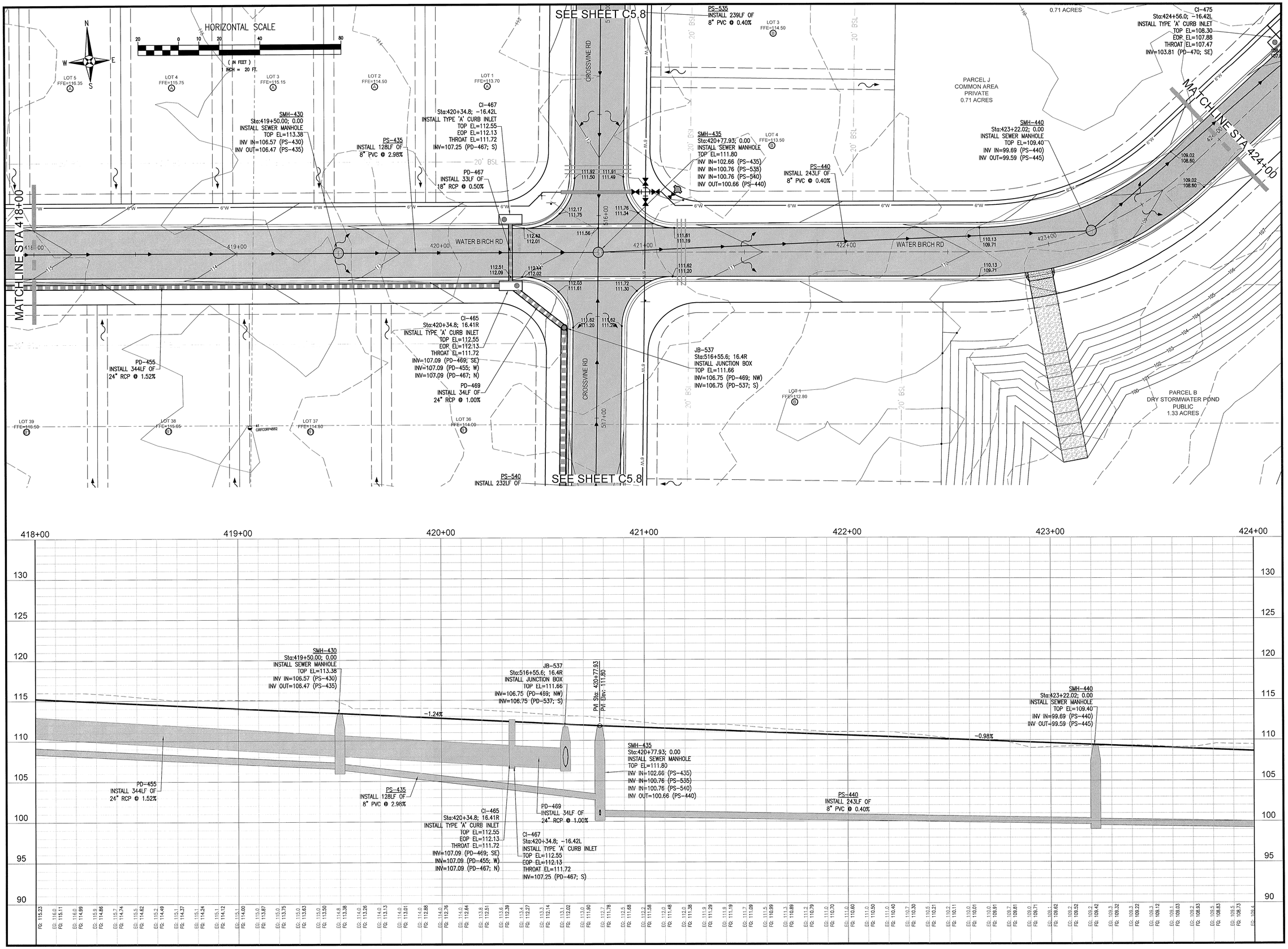

RBA

REBOL-BATTLE & ASSOCIATES
Civil Engineers and Surveyors
2301 N. Ninth Avenue, Suite 300
Pensacola, Florida 32503
Telephone 850.438.0400 Fax 850.438.0448
EB 00009657 LB7916

PLAN & PROFILE

BROOKHAVEN PHASE 4
A 193 LOT SUBDIVISION
PENSACOLA, FLORIDA

No.	DATE	REVISION

SEAL
NOT FOR CONSTRUCTION
PAUL A. BATTLE, P.E.
No. 53126

Dr. By:
Ck By: PAB
Job No.: 2015.035 F
Date: 6/1/2022

DRAWING No.
C5.3

This drawing is the property of Rebol-Battle & Associates, and may not be reproduced without written permission.

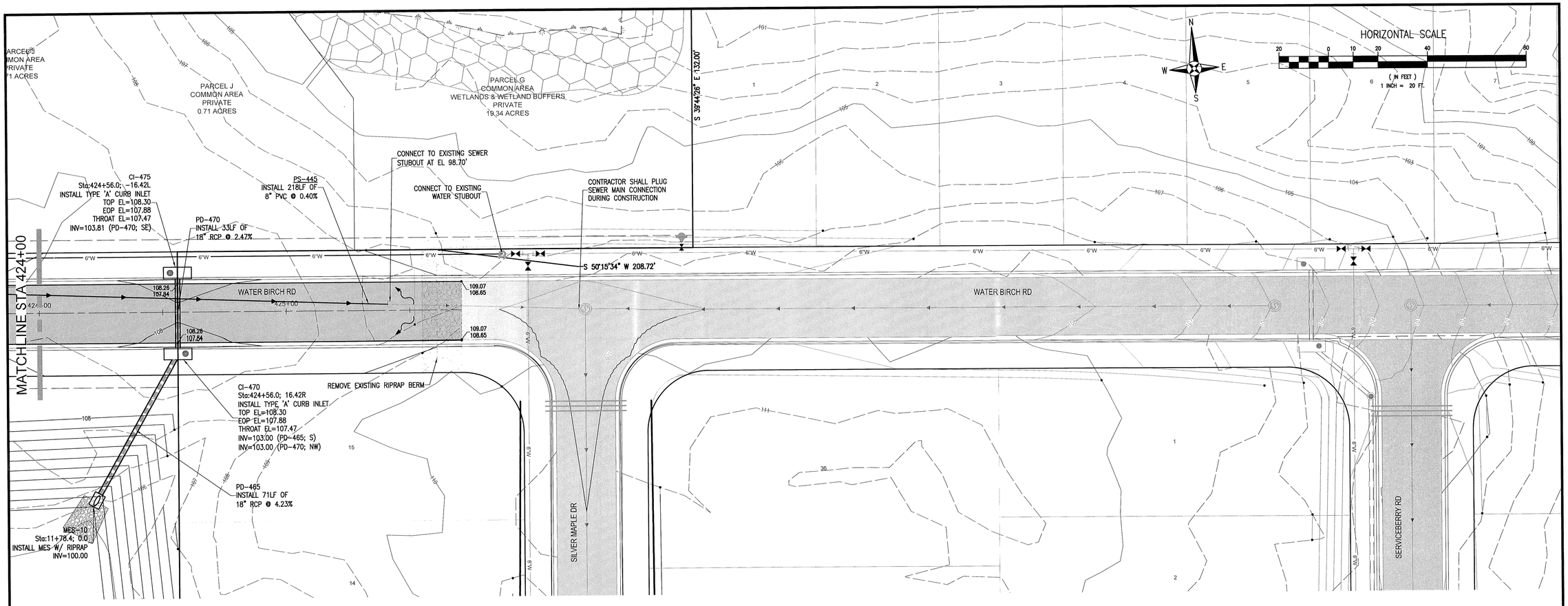

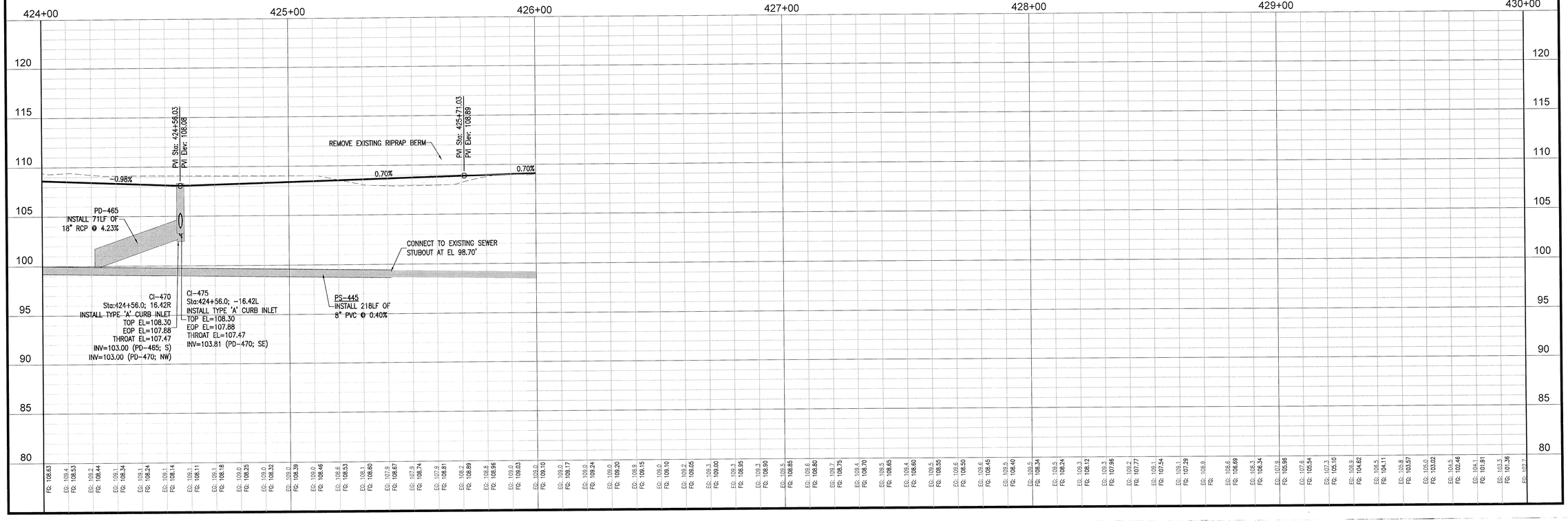

REBOL-BATTLE & ASSOCIATES
Civil Engineers and Surveyors
25th N. Ninth Avenue, Suite 300
Pensacola, Florida 32503
Telephone 850.438.0400 Fax 850.438.0448
EB 00009857 LB7916

PLAN & PROFILE

BROOKHAVEN PHASE 4
A 193 LOT SUBDIVISION
PENSACOLA, FLORIDA

No.	DATE	REVISION

SEAL
NOT FOR CONSTRUCTION
PAUL A. BATTLE, P.E. LICENSE No. 53126
6/15/22
STATE OF FLORIDA
PAUL A. BATTLE, P.E.
No. 53126

Dr. By:
Ck By: PAB
Job No.: 2015.035 F
Date: 6/1/2022

DRAWING No.
C5.4

This drawing is the property of Rebol-Battle & Associates, and may not be reproduced without written permission.

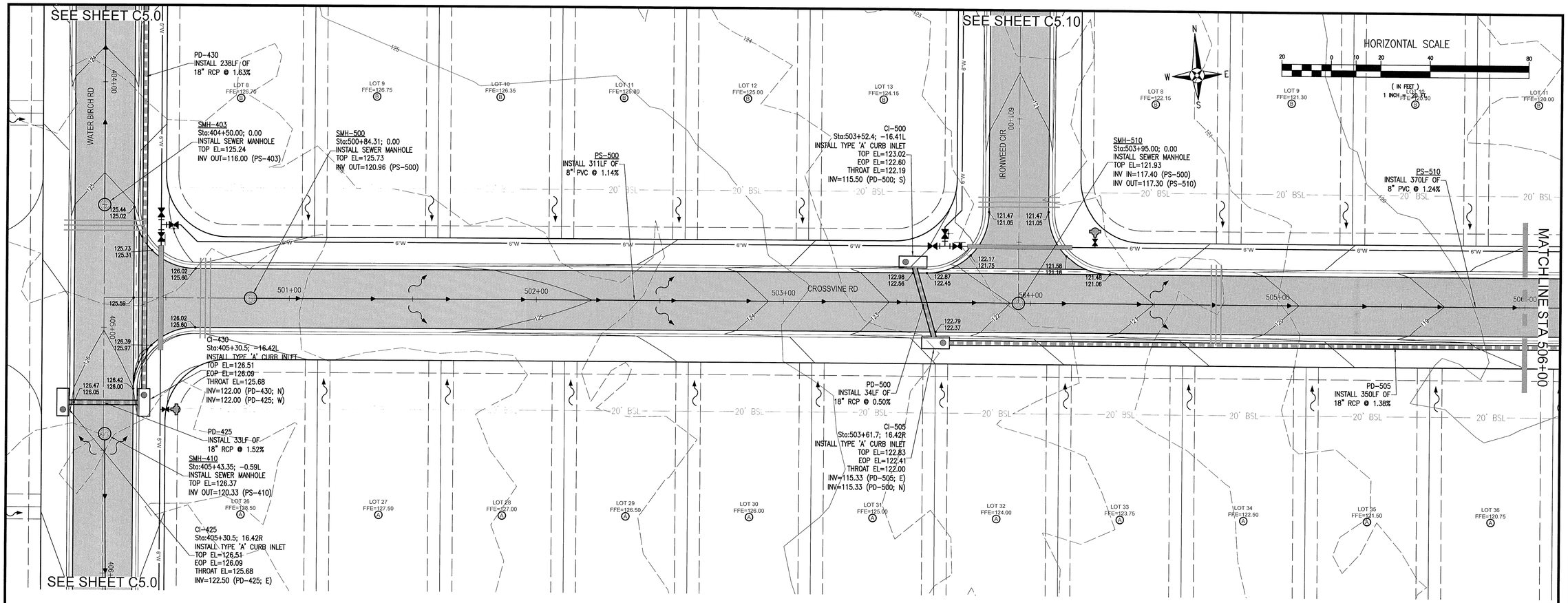

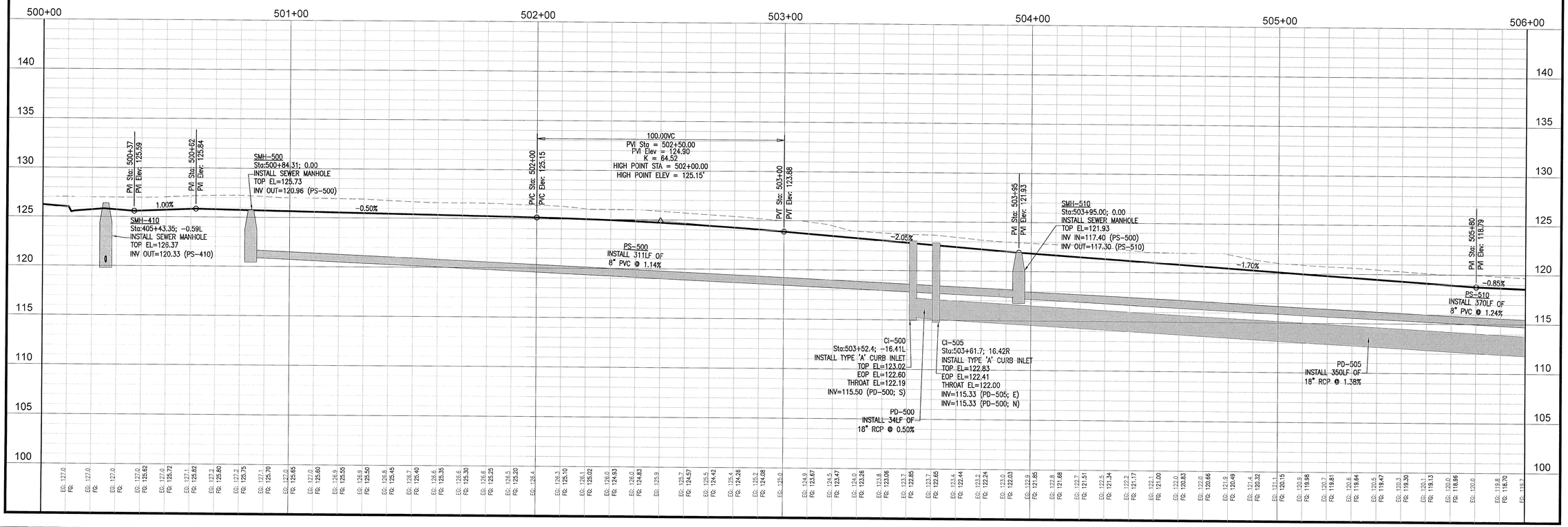

REBOL-BATTLE & ASSOCIATES
Civil Engineers and Surveyors
2301 N. Ninth Avenue, Suite 300
Pensacola, Florida 32503
Telephone 850.438.9400 Fax 850.438.0448
EB 0000697 LB7916

PLAN & PROFILE

BROOKHAVEN PHASE 4
A 193 LOT SUBDIVISION
PENSACOLA, FLORIDA

No.	DATE	REVISION

SEAL
NOT FOR CONSTRUCTION
PAUL A. BATTLE, P.E.
LICENSED
No. 53126
6/1/22
STATE OF FLORIDA
PAUL A. BATTLE, P.E.
No. 53126

Dr. By:
Ck By: PAB
Job No.: 2015.035 F
Date: 6/1/2022

DRAWING No.
C5.5

This drawing is the property of Rebol-Battle & Associates, and may not be reproduced without written permission.

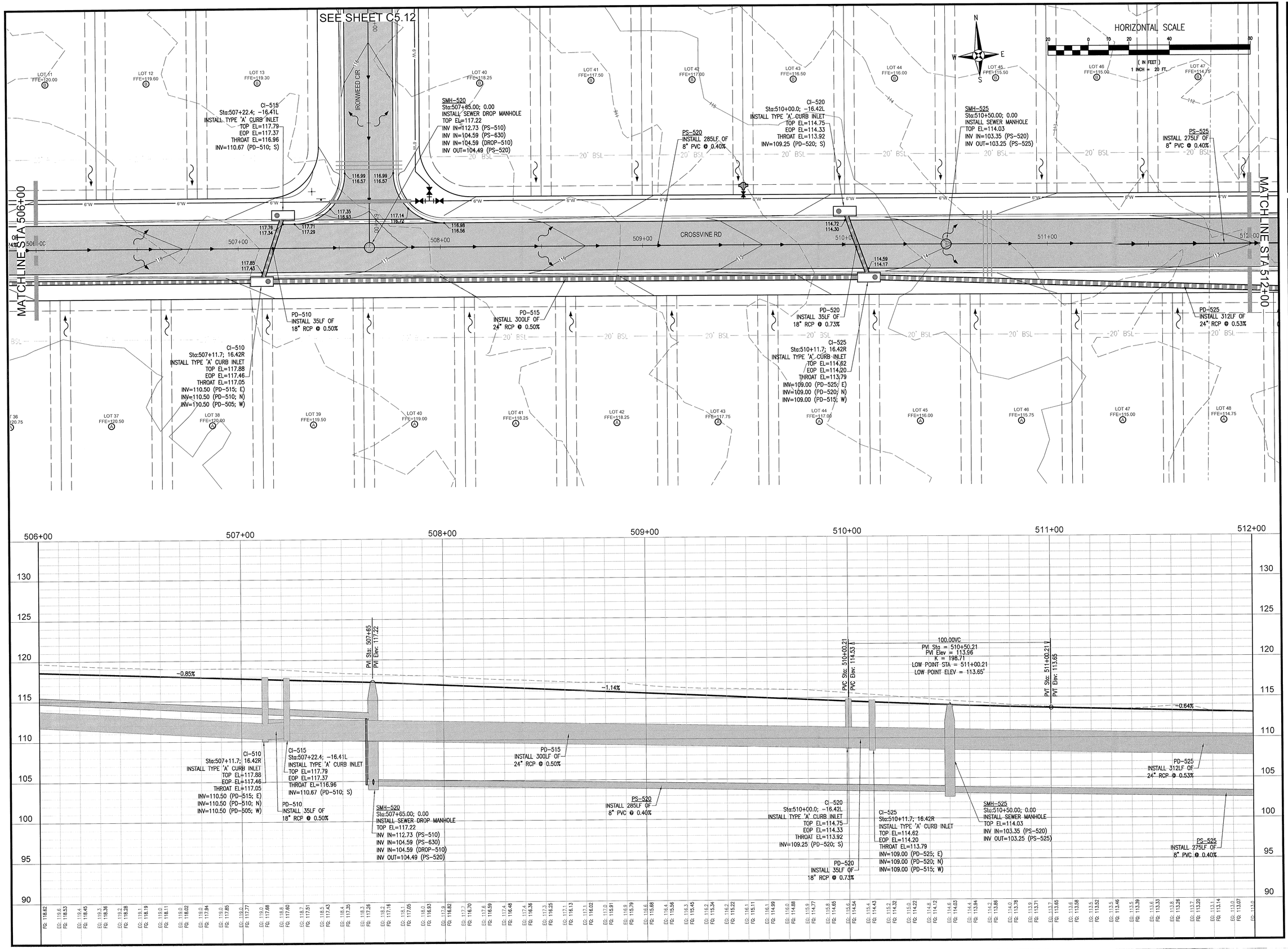

REBOL-BATTLE & ASSOCIATES
Civil Engineers and Surveyors
2301 N. Ninth Avenue, Suite 300
Pensacola, Florida 32503
Telephone 850.438.0400 Fax 850.438.0448
EB 00009657 LB7816

PLAN & PROFILE

BROOKHAVEN PHASE 4
A 193 LOT SUBDIVISION
PENSACOLA, FLORIDA

No.	DATE	REVISION

SEAL
NOT FOR CONSTRUCTION
PAUL A. BATTLE
LICENSE
No. 63126
STATE OF
FLORIDA
PAUL A. BATTLE, P.E.
No.63126

Dr. By:
Ck By: PAB
Job No.: 2015.035 F
Date: 6/1/2022

DRAWING No.
C5.6

This drawing is the property of Rebol-Battle & Associates, and may not be reproduced without written permission.

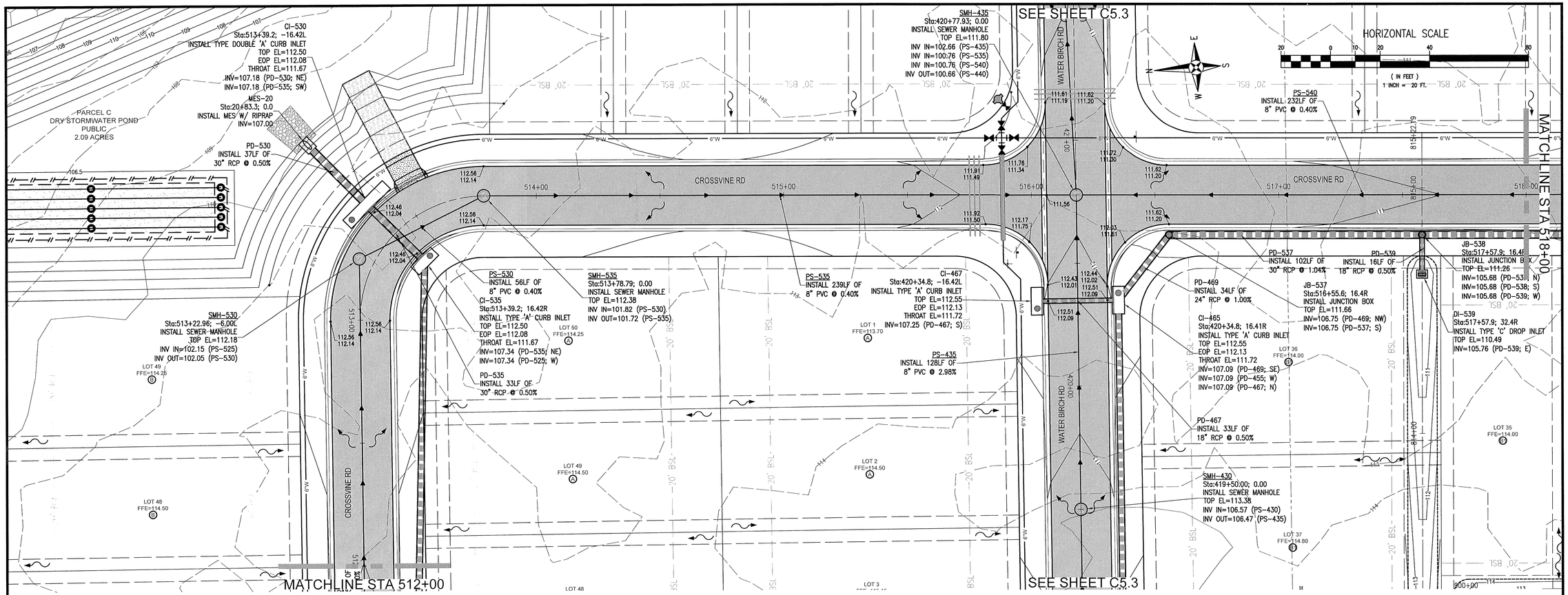

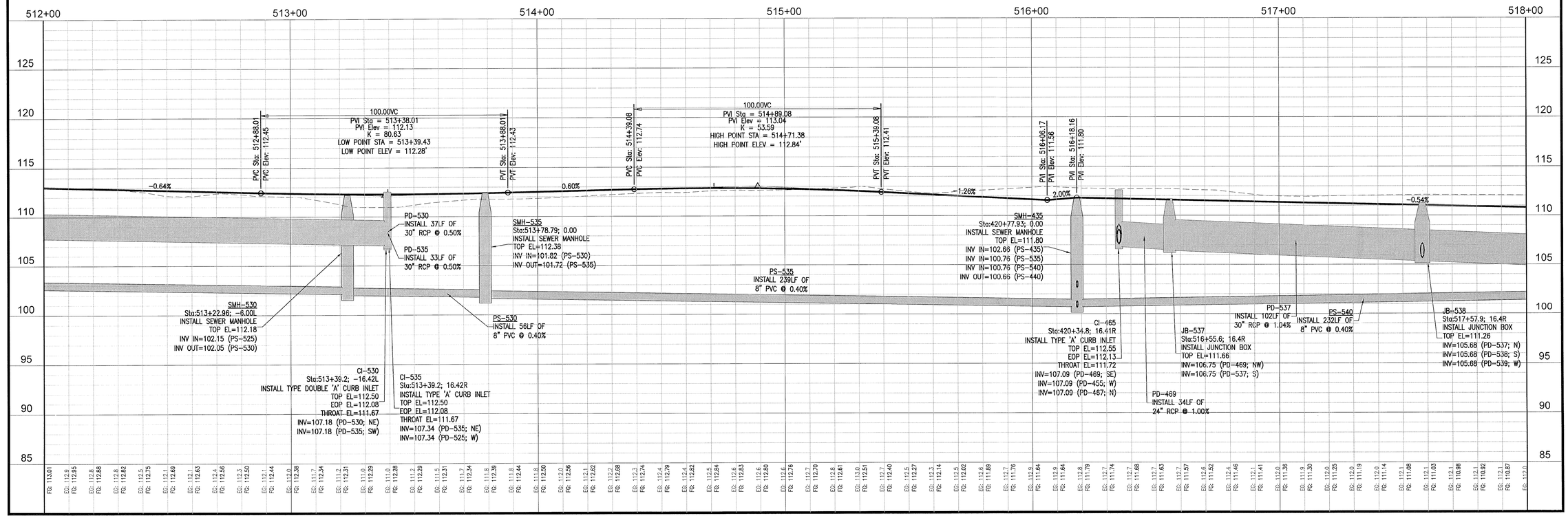

REBOL-BATTLE & ASSOCIATES
Civil Engineers and Surveyors
2301 N. Ninth Avenue, Suite 300
Pensacola, Florida 32503
Telephone 850.438.0400 Fax 850.438.0448
EB 00026957 LB7916

PLAN & PROFILE

BROOKHAVEN PHASE 4
A 193 LOT SUBDIVISION
PENSACOLA, FLORIDA

No.	DATE	REVISION

SEAL
NOT FOR CONSTRUCTION
PAULA A. BATTLE LICENSE No. 53126 STATE OF FLORIDA
6/15/22
PAULA A. BATTLE, P.E.
No. 53126

Dr. By:
Ck By: PAB
Job No.: 2015.035 F
Date: 6/1/2022

DRAWING No.
C5.7

This drawing is the property of Rebol-Battle & Associates, and may not be reproduced without written permission.

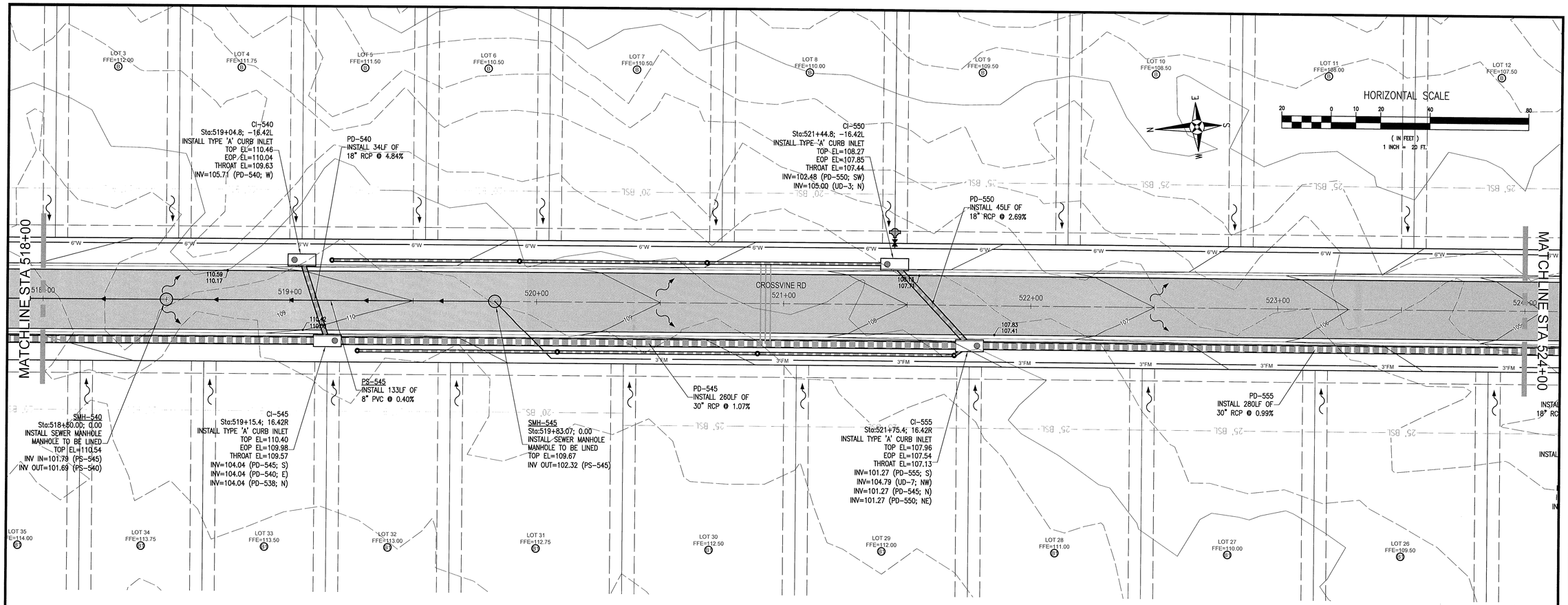

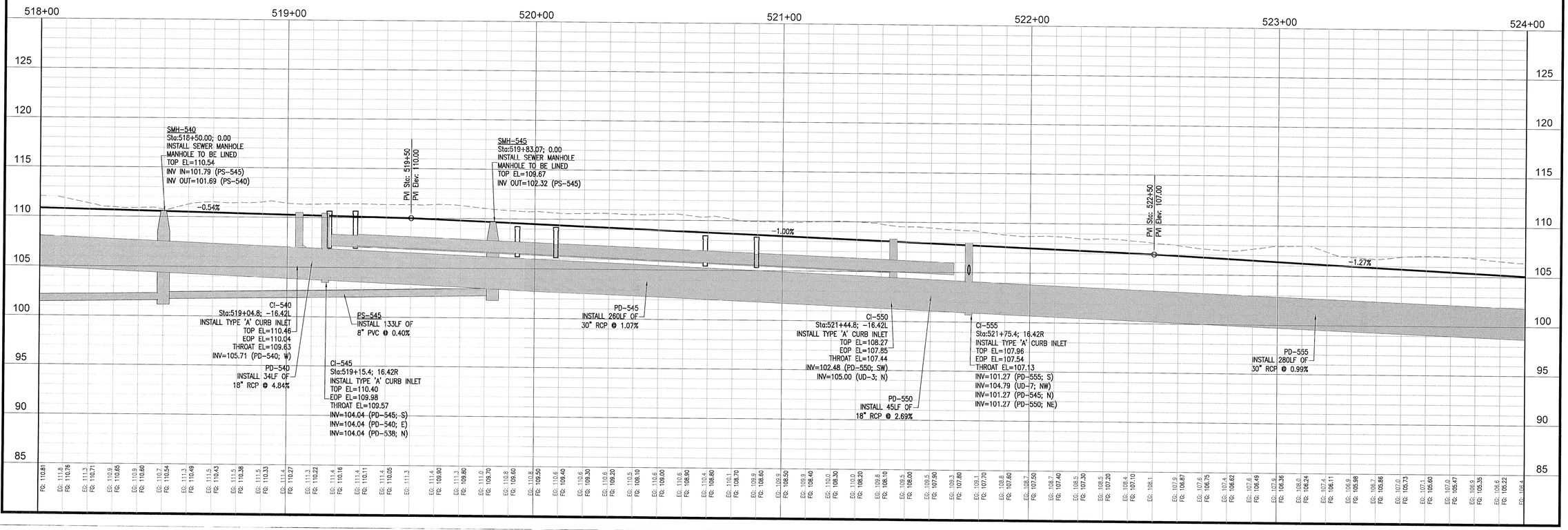

REBOL-BATTLE & ASSOCIATES
Civil Engineers and Surveyors
2301 N. Ninth Avenue, Suite 300
Pensacola, Florida 32503
Telephone 850.434.7400 Fax 850.438.0448
EB 0008687 LB 7815

PLAN & PROFILE

BROOKHAVEN PHASE 4
A 193 LOT SUBDIVISION
PENSACOLA, FLORIDA

No.	DATE	REVISION

SEAL
NOT FOR CONSTRUCTION
PAUL A. BATTLE, P.E.
No. 53126
STATE OF FLORIDA

Dr. By:
Ck By: PAB
Job No.: 2015.035 F
Date: 6/1/2022

DRAWING No.
C5.8

This drawing is the property of Rebol-Battle & Associates, and may not be reproduced without written permission.

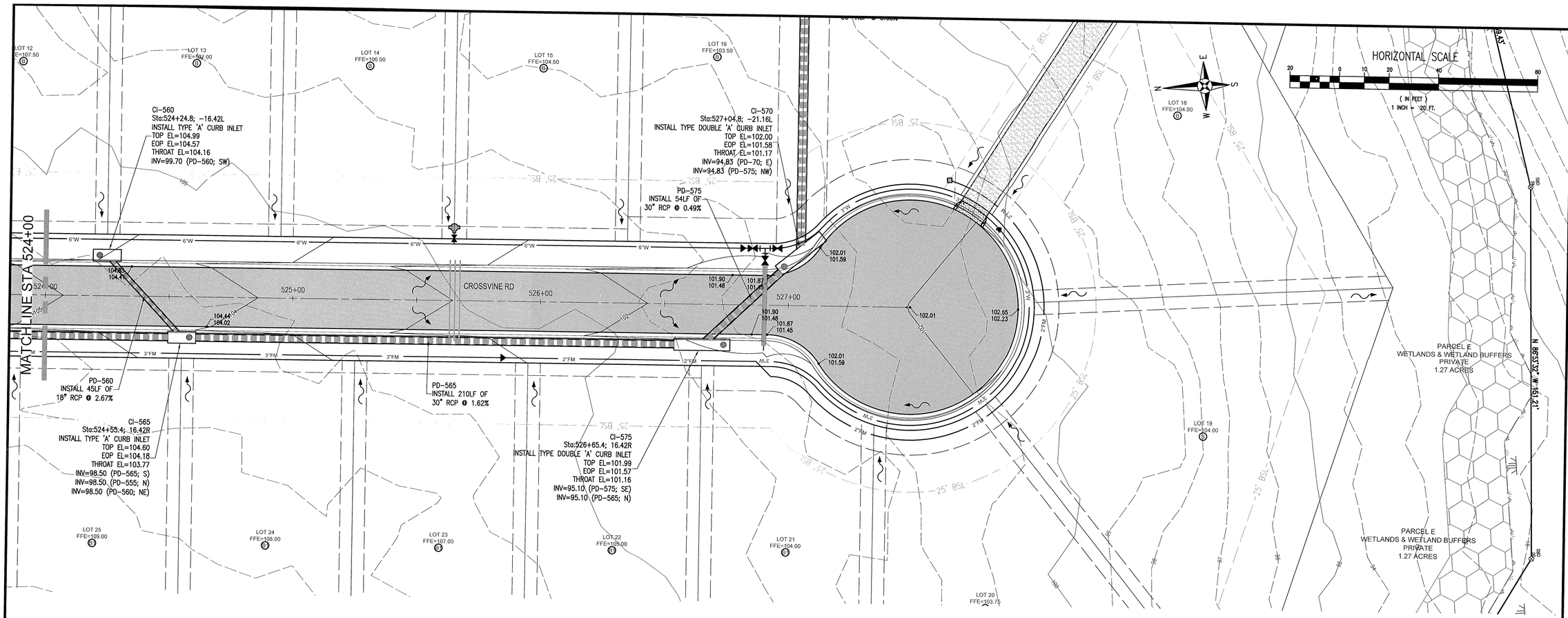

REBOL-BATTLE & ASSOCIATES
Civil Engineers and Surveyors
2301 N. Ninth Avenue, Suite 300
Pensacola, Florida 32503
Telephone (850) 438-0446 Fax (850) 438-9448
EB 0002606 LB 7918

PLAN & PROFILE

BROOKHAVEN PHASE 4
A 193 LOT SUBDIVISION
PENSACOLA, FLORIDA

No.	DATE	REVISION

SEAL
NOT FOR CONSTRUCTION
PAUL A. BATTLE, P.E.
No. 53126
6/9/22
STATE OF FLORIDA
PAUL A. BATTLE, P.E.
No. 53126

Dr. By:
Ck By: PAB
Job No.: 2015.035 F
Date: 6/1/2022

DRAWING No.
C5.9

This drawing is the property of Rebol-Battle & Associates, and may not be reproduced without written permission.

SEE SHEET C5.5

SEE SHEET C5.5

HORIZONTAL SCALE

20 0 10 20 40 80

(IN FEET)
INCH = 20 FT.

CI-505
Sta:503+61.7; 16.42R
INSTALL TYPE 'A' CURB INLET
TOP EL=122.83
EOP EL=122.41
THROAT EL=122.00
INV=115.33 (PD-505; E)
INV=115.33 (PD-500; N)

PD-500
INSTALL 34LF OF
18" RCP @ 0.50%

CI-500
Sta:503+52.4; -16.41L
INSTALL TYPE 'A' CURB INLET
TOP EL=123.02
EOP EL=122.60
THROAT EL=122.19
INV=115.50 (PD-500; S)

CI-605
Sta:602+70.0; -16.42L
INSTALL TYPE 'A' CURB INLET
TOP EL=119.13
EOP EL=118.71
THROAT EL=118.30
INV=110.66 (PD-600; E)

PS-600
INSTALL 330LF OF
8" PVC @ 1.73%

CI-615
Sta:604+70.0; -16.42L
INSTALL TYPE 'A' CURB INLET
TOP EL=114.79
EOP EL=114.37
THROAT EL=113.96
INV=106.66 (PD-610; E)

SMH-605
Sta:605+28.18; -5.90L
INSTALL SEWER MANHOLE
TOP EL=113.29
INV IN=108.69 (PS-600)
INV IN=108.69 (PS-10)
INV OUT=108.59 (PS-605)

PS-605
INSTALL 25LF OF
8" PVC @ 0.40%

SMH-610
Sta:605+44.27; -20.71L
INSTALL SEWER MANHOLE
TOP EL=112.95
INV IN=108.49 (PS-605)
INV OUT=108.39 (PS-610)

MATCHLINE STA 604+00

IRONWEED CIR

WATER BIRCH RD

SMH-510
Sta:503+95.00; 0.00
INSTALL SEWER MANHOLE
TOP EL=121.93
INV IN=117.40 (PS-500)
INV OUT=117.30 (PS-510)

SMH-600
Sta:602+00.00; 0.00
INSTALL SEWER MANHOLE
TOP EL=120.20
INV OUT=114.41 (PS-600)

PD-600
INSTALL 33LF OF
18" RCP @ 0.50%

CI-600
Sta:602+70.0; 16.42R
INSTALL TYPE 'A' CURB INLET
TOP EL=119.13
EOP EL=118.71
THROAT EL=118.30
INV=110.50 (PD-605; N)
INV=110.50 (PD-600; W)

PD-605
INSTALL 200LF OF
18" RCP @ 2.00%

PD-610
INSTALL 33LF OF
18" RCP @ 0.50%

CI-610
Sta:604+70.0; 16.42R
INSTALL TYPE 'A' CURB INLET
TOP EL=114.79
EOP EL=114.37
THROAT EL=113.96
INV=106.50 (PD-615; N)
INV=106.50 (PD-610; W)
INV=106.50 (PD-605; S)

PD-615
INSTALL 66LF OF
18" RCP @ 0.50%

JB-620
Sta:605+44.3; 6.0R
INSTALL JUNCTION BOX
TOP EL=113.04
INV=106.17 (PD-615; S)
INV=106.17 (PD-623; E)

PD-623
INSTALL 166LF OF
18" RCP @ 0.50%

LOT 12 FFE=125.00 (B)
LOT 13 FFE=124.15 (B)
LOT 14 FFE=123.00 (A)
LOT 15 FFE=122.00 (A)
LOT 18 FFE=119.00 (A)
LOT 19 FFE=118.00 (A)
LOT 20 FFE=117.00 (A)
LOT 8 FFE=122.15 (B)
LOT 9 FFE=121.30 (B)
LOT 7 FFE=120.25 (B)
LOT 6 FFE=119.35 (B)
LOT 5 FFE=118.50 (B)
LOT 4 FFE=117.65 (B)
LOT 3 FFE=116.75 (B)
LOT 2 FFE=115.90 (B)
LOT 1 FFE=115.30 (B)

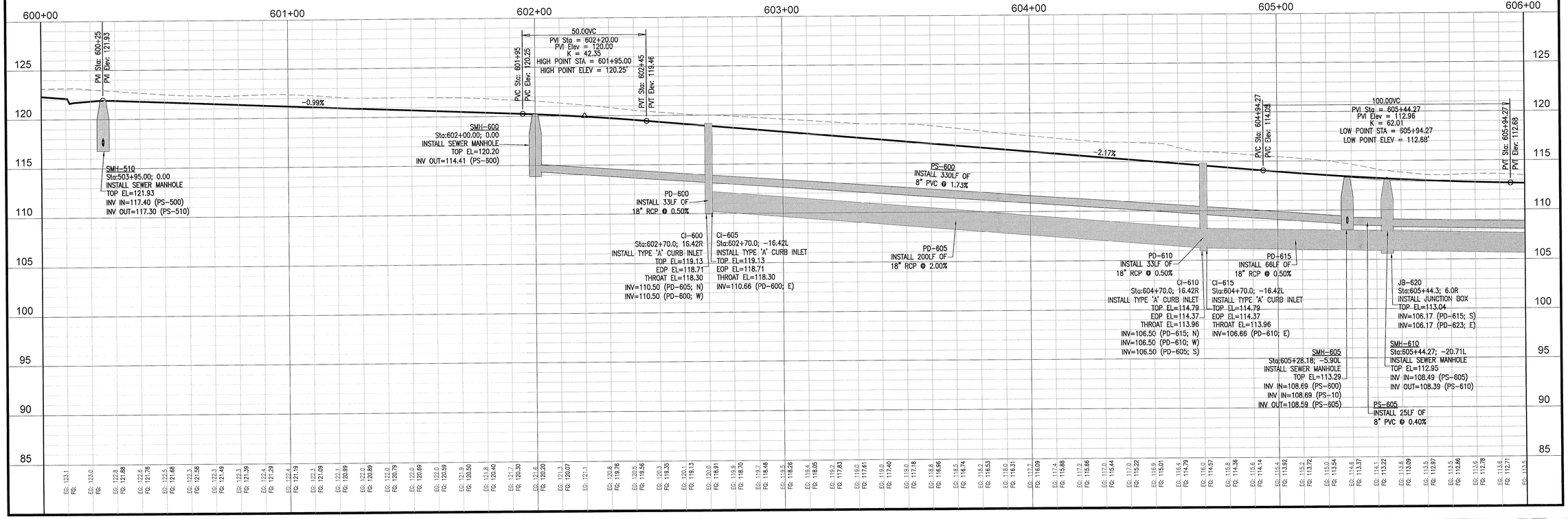

REBOL-BATTLE & ASSOCIATES
Civil Engineers and Surveyors
2301 N. Palafox Street, Suite 300
Pensacola, Florida 32503
Telephone 850.438.0400 Fax 850.438.0448
EB 00026857 LB7916

PLAN & PROFILE

BROOKHAVEN PHASE 4
A 193 LOT SUBDIVISION
PENSACOLA, FLORIDA

No.	DATE	REVISION

SEAL
NOT FOR CONSTRUCTION
PAUL A. BATTLE, P.E.
LICENSE
6/15/22
STATE OF FLORIDA
PAUL A. BATTLE, P.E.
No. 53128

Dr. By:
Ck By: PAB
Job No.: 2015.035 F
Date: 6/1/2022

DRAWING No.
C5.10

This drawing is the property of Rebol-Battle & Associates, and may not be reproduced without written permission.

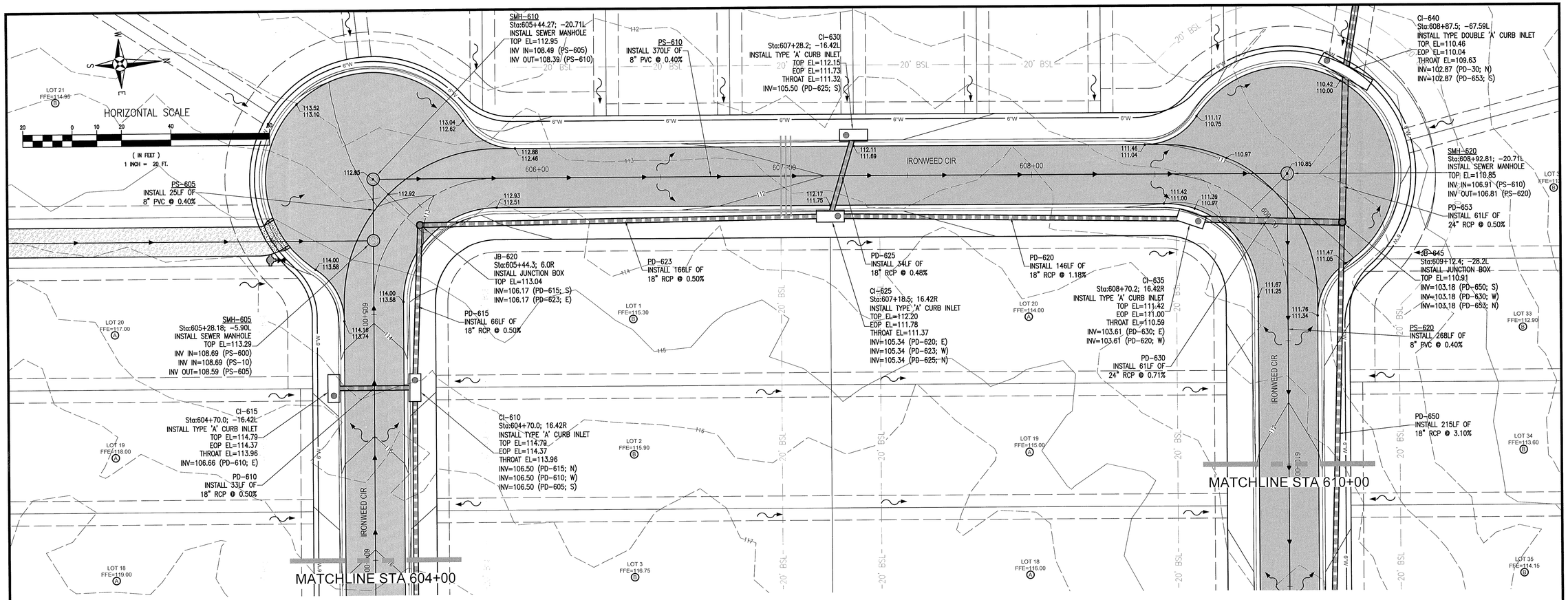

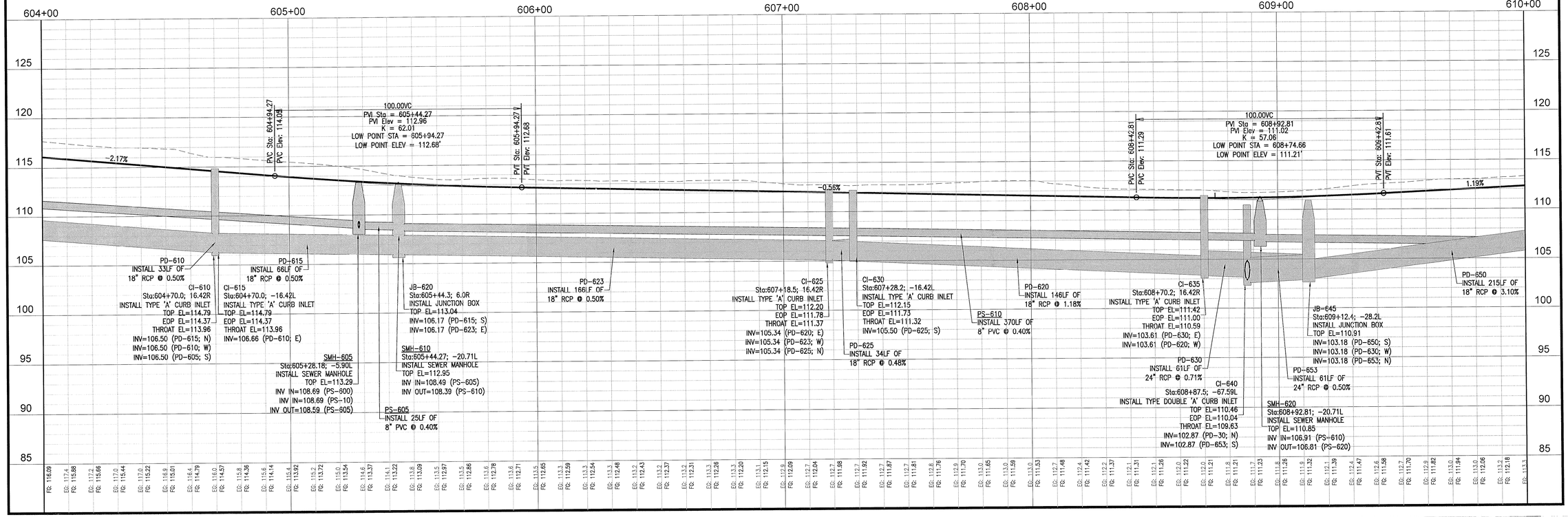

REBOL-BATTLE & ASSOCIATES
Civil Engineers and Surveyors
230 N. Ninth Avenue, Suite 300
Pensacola, Florida 32502
Telephone 850.438.0400 Fax 850.438.0448
EB 00009657 LB7916

PLAN & PROFILE

BROOKHAVEN PHASE 4
A 193 LOT SUBDIVISION
PENSACOLA, FLORIDA

No.	DATE	REVISION

SEAL
NOT FOR CONSTRUCTION
PAULA BATTLE
No. 53126
STATE OF FLORIDA
PAULA BATTLE, P.E.
No.53126

Dr. By:
Ck By: PAB
Job No.: 2015.035 F
Date: 6/1/2022

DRAWING No.
C5.11

This drawing is the property of Rebol-Battle & Associates, and may not be reproduced without written permission.

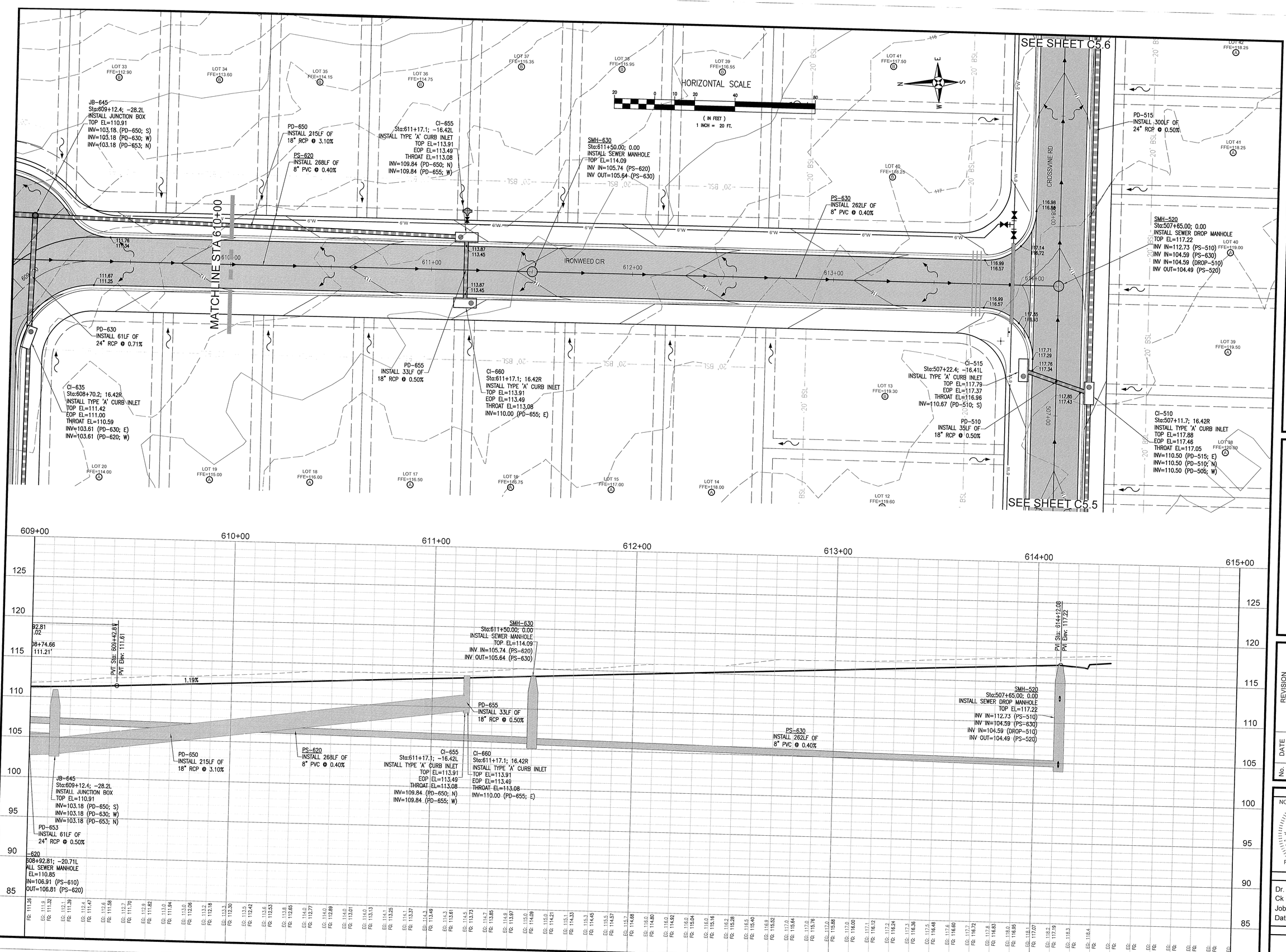

REBOL-BATTLE & ASSOCIATES
Civil Engineers and Surveyors
2301 N. Ninth Avenue, Suite 300
Pensacola, Florida 32503
Telephone: 850.438.9661 Fax 850.438.0448
EB 0002965? LB7145

PLAN & PROFILE

BROOKHAVEN PHASE 4
A 193 LOT SUBDIVISION
PENSACOLA, FLORIDA

No.	DATE	REVISION

SEAL
NOT FOR CONSTRUCTION
PAUL A. BATTLE, P.E.
No. 53126
6/15/22
STATE OF FLORIDA
PAUL A. BATTLE, P.E. No. 53126

Dr. By:
Ck By: PAB
Job No.: 2015.035 F
Date: 6/1/2022

DRAWING No.
C5.12

This drawing is the property of Rebol-Battle & Associates, and may not be reproduced without written permission.

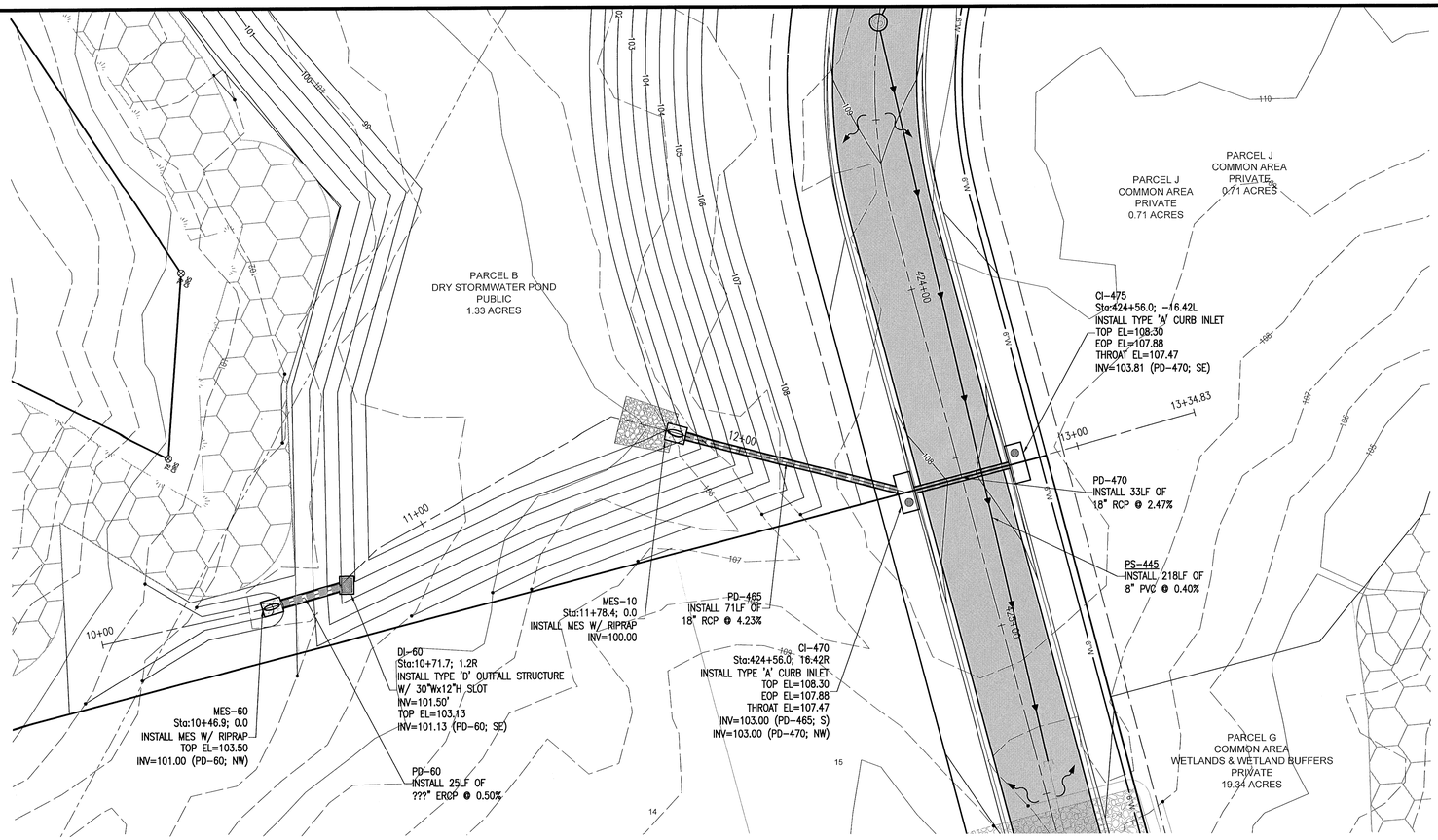

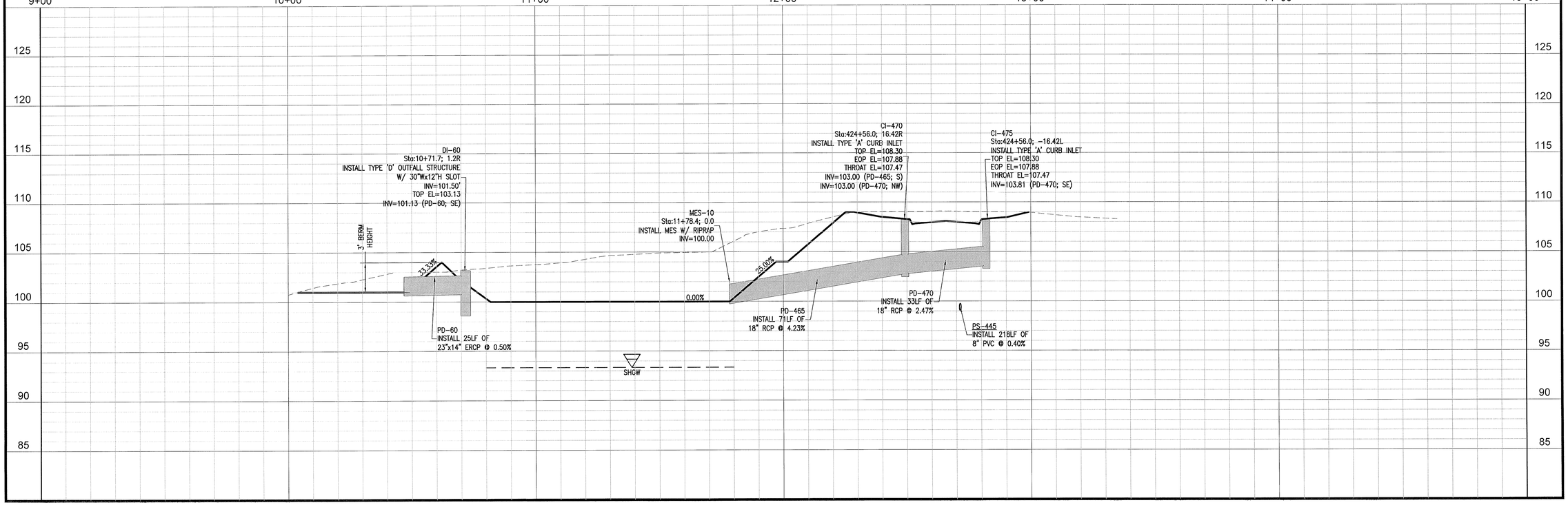

REBOL-BATTLE & ASSOCIATES
Civil Engineers and Surveyors
2301 N. Ninth Avenue, Suite 300
Pensacola, Florida 32503
Telephone 850.438.0400 Fax 850.438.0448
EB 00006957 LB7916

PLAN & PROFILE

BROOKHAVEN PHASE 4
A 193 LOT SUBDIVISION
PENSACOLA, FLORIDA

No.	DATE	REVISION

SEAL
NOT FOR CONSTRUCTION
REGISTERED PROFESSIONAL ENGINEER
LICENSE
No. 53126
6/15/22
STATE OF FLORIDA
PAUL A. BATTLE, P.E.
No. 53126

Dr. By:
Ck By: PAB
Job No.: 2015.035 F
Date: 6/1/2022

DRAWING No.
C6.0

This drawing is the property of Rebol-Battle & Associates, and may not be reproduced without written permission.

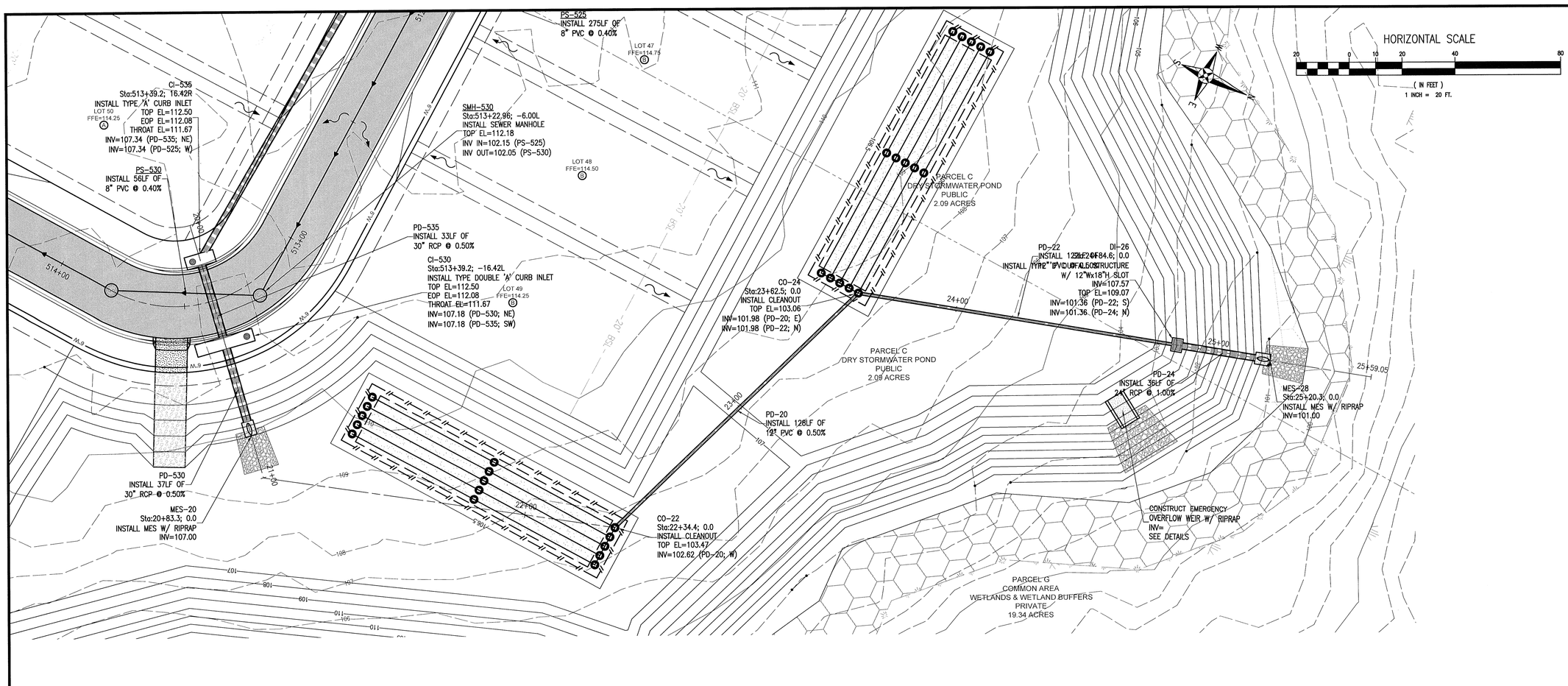

REBOL-BATTLE & ASSOCIATES
Civil Engineers and Surveyors
2301 N. Ninth Avenue, Suite 300
Pensacola, Florida 32503
Telephone 850.438.0400 Fax 850.438.0448
EB 00009857 LB7916

PLAN & PROFILE

BROOKHAVEN PHASE 4
A 193 LOT SUBDIVISION
PENSACOLA, FLORIDA

No.	DATE	REVISION

SEAL
NOT FOR CONSTRUCTION
PAUL A. BATTLE, P.E.
No. 53126
STATE OF FLORIDA
6/15/22

Dr. By:
Ck By: PAB
Job No.: 2015.035 F
Date: 6/1/2022

DRAWING No.
C6.1

This drawing is the property of Rebol-Battle & Associates, and may not be reproduced without written permission.

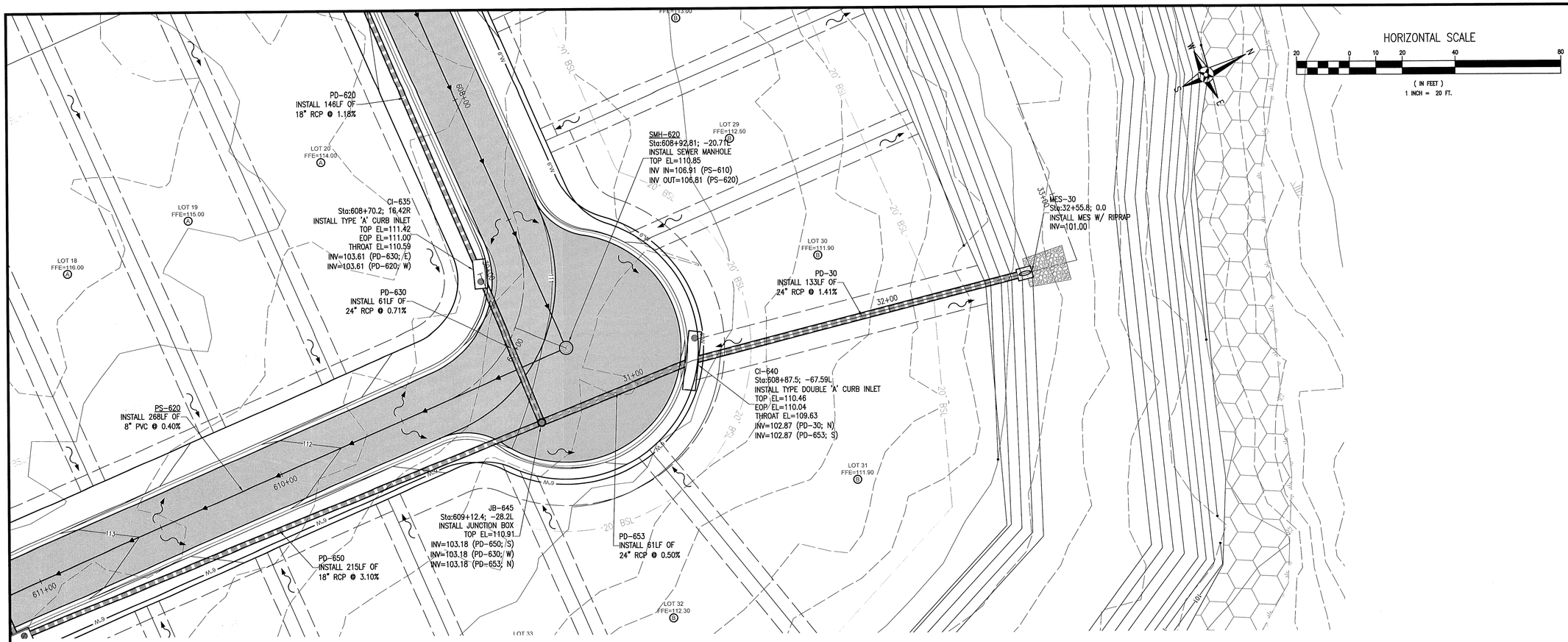

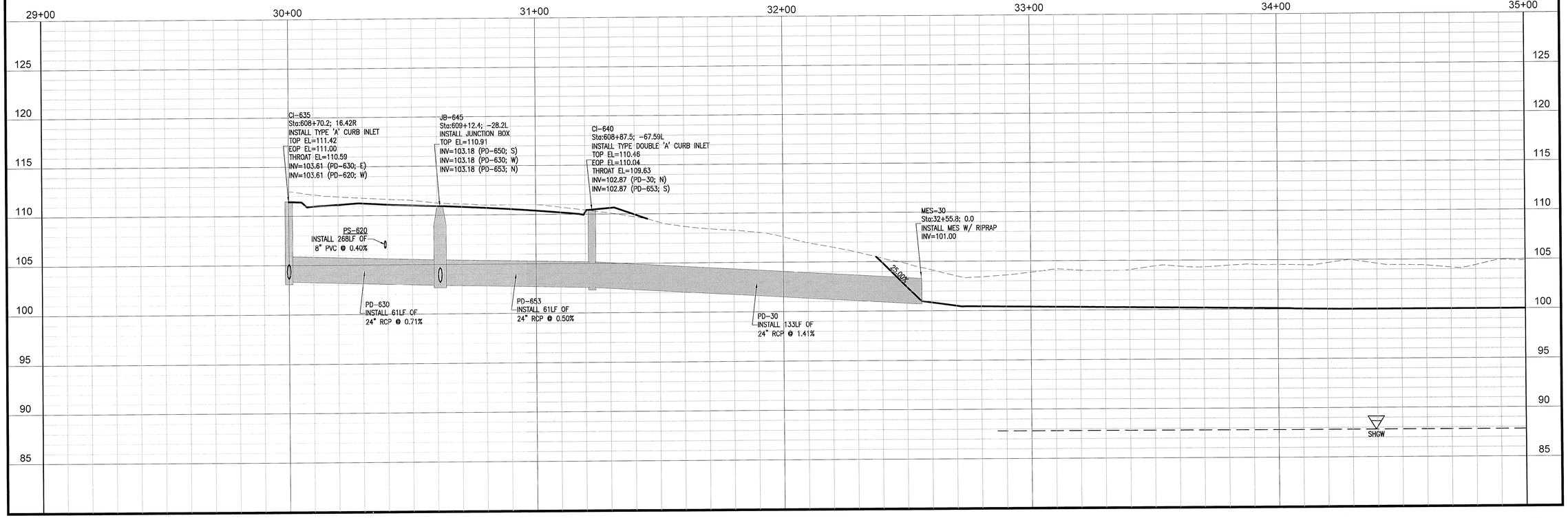

REBOL-BATTLE & ASSOCIATES
Civil Engineers and Surveyors
2301 N. Ninth Avenue, Suite 300
Pensacola, Florida 32503
Telephone 850.438.0400 Fax 850.438.0448
EB 00009657 LB7916

PLAN & PROFILE

BROOKHAVEN PHASE 4
A 193 LOT SUBDIVISION
PENSACOLA, FLORIDA

No.	DATE	REVISION

SEAL
NOT FOR CONSTRUCTION
PAUL A. BATTLE, P.E.
License No. 53126
6/15/22
STATE OF FLORIDA
PAUL A. BATTLE, P.E.
No. 53126
REGISTERED PROFESSIONAL ENGINEER

Dr. By:
Ck By: PAB
Job No.: 2015.035 F
Date: 6/1/2022

DRAWING No.
C6.2

This drawing is the property of Rebol-Battle & Associates, and may not be reproduced without written permission.

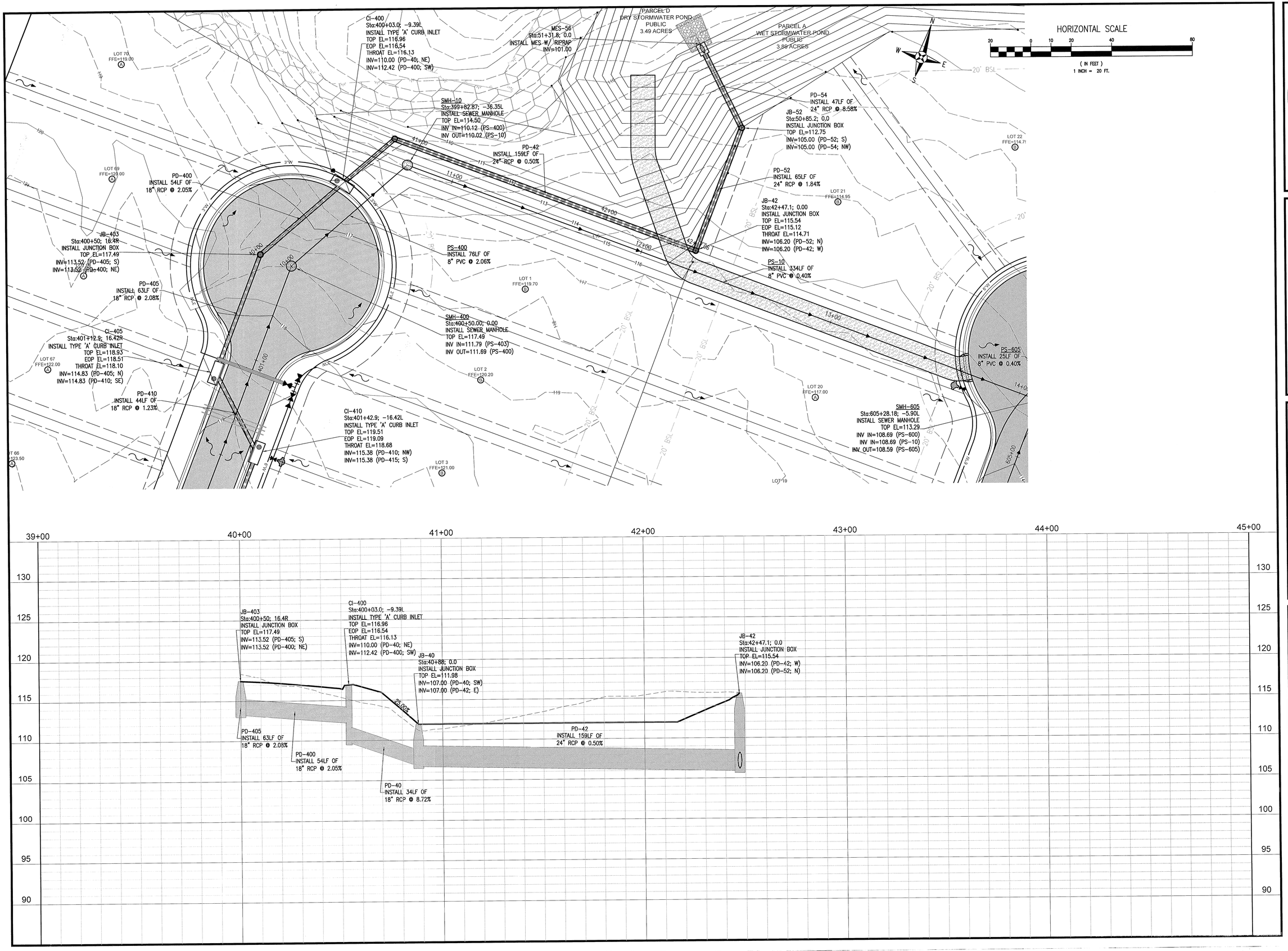

RBA
REBOL-BATTLE & ASSOCIATES
Civil Engineers and Surveyors
2301 N. Ninth Avenue, Suite 300
Pensacola, Florida 32503
Telephone 850.438.0400 Fax 850.438.0448
EB 00009657 LB7916

PLAN & PROFILE

BROOKHAVEN PHASE 4

A 193 LOT SUBDIVISION
PENSACOLA, FLORIDA

No.	DATE	REVISION

SEAL
NOT FOR CONSTRUCTION
PAUL A. BATTLE, P.E.
No. 53126
6/15/22
STATE OF FLORIDA

Dr. By:
Ck By: PAB
Job No.: 2015.035 F
Date: 6/1/2022

DRAWING No.
C6.3

This drawing is the property of Rebol-Battle & Associates, and may not be reproduced without written permission.

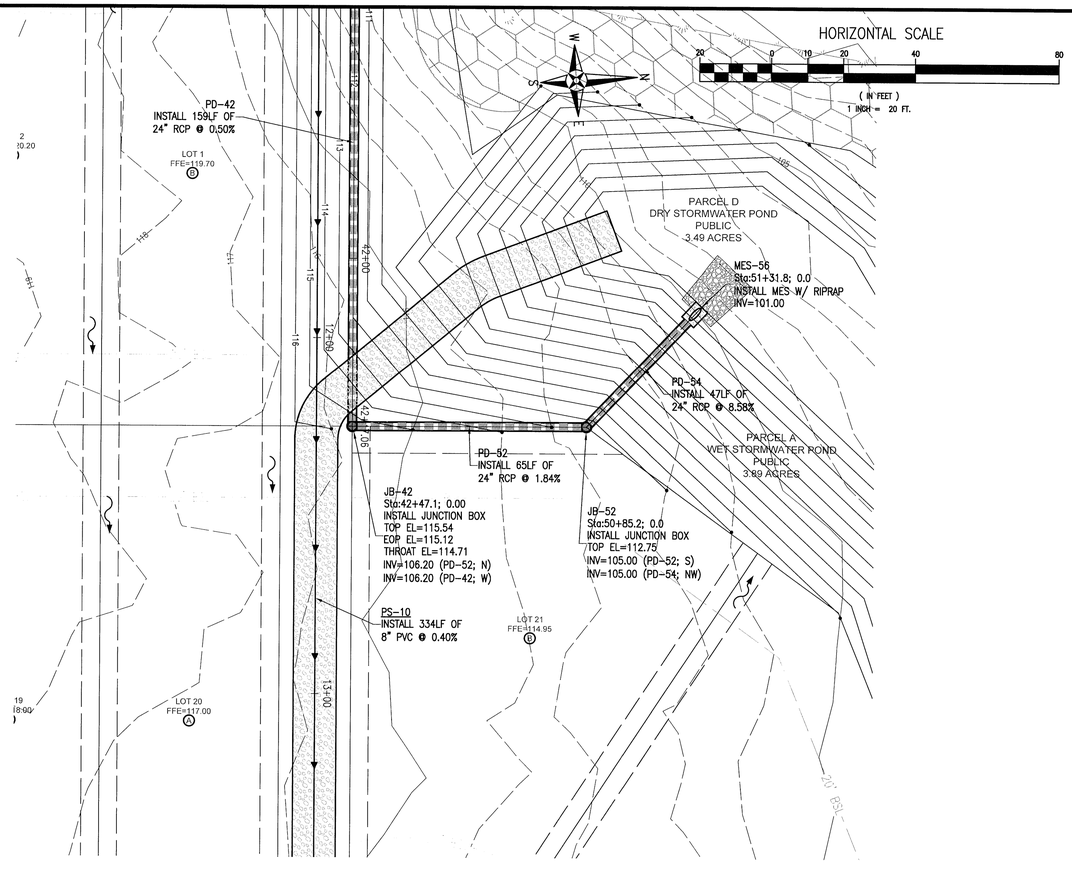

REBOL-BATTLE & ASSOCIATES
Civil Engineers and Surveyors
2301 N. Ninth Avenue, Suite 300
Pensacola, Florida 32503
Telephone 850.438.1600 Fax 850.438.0448
EB 00002857 LB7916

PLAN & PROFILE

BROOKHAVEN PHASE 4
A 193 LOT SUBDIVISION
PENSACOLA, FLORIDA

No.	DATE	REVISION

SEAL
NOT FOR CONSTRUCTION
PAUL A. BATTLE
LICENSE
No. 53126
6/15/22
STATE OF
PAUL A. BATTLE, P.E.
No. 53126

Dr. By:
Ck By: PAB
Job No.: 2015.035 F
Date: 6/1/2022

DRAWING No.
C6.4

This drawing is the property of Rebol-Battle & Associates, and may not be reproduced without written permission.

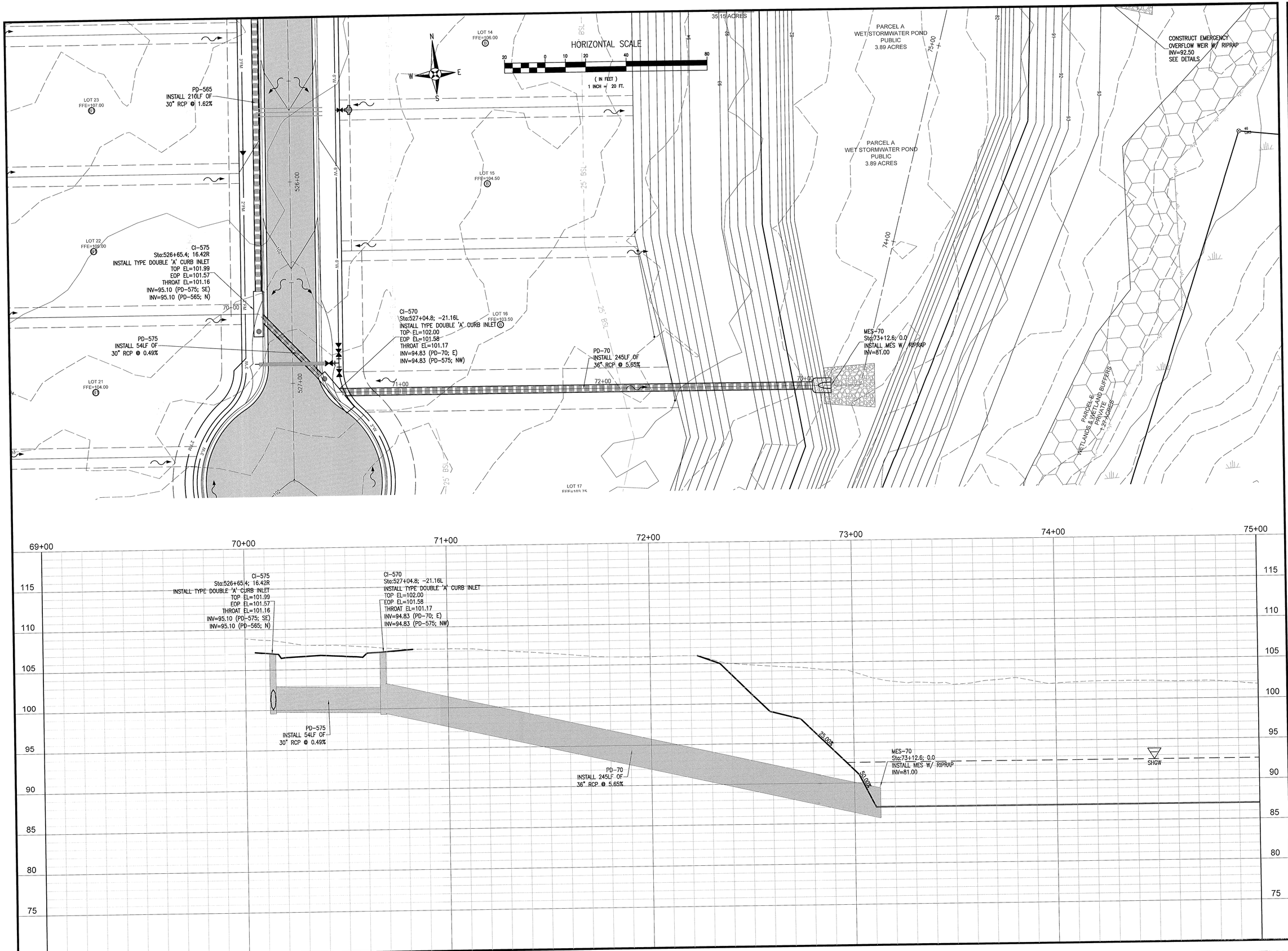

REBOL-BATTLE & ASSOCIATES
Civil Engineers and Surveyors
2301 N. Ninth Avenue, Suite 300
Pensacola, Florida 32503
Telephone 850.438.0400 Fax 850.438.0448
EB 00006857 LB7916

PLAN & PROFILE

BROOKHAVEN PHASE 4
A 193 LOT SUBDIVISION
PENSACOLA, FLORIDA

No.	DATE	REVISION

SEAL
NOT FOR CONSTRUCTION
PAUL A. BATTLE
FLORIDA
No. 53126
6/15/22
STATE OF
PAUL A. BATTLE, P.E.
No. 53126

Dr. By:
Ck By: PAB
Job No.: 2015.035 F
Date: 6/1/2022

DRAWING No.
C6.5

This drawing is the property of Rebol-Battle & Associates, and may not be reproduced without written permission.

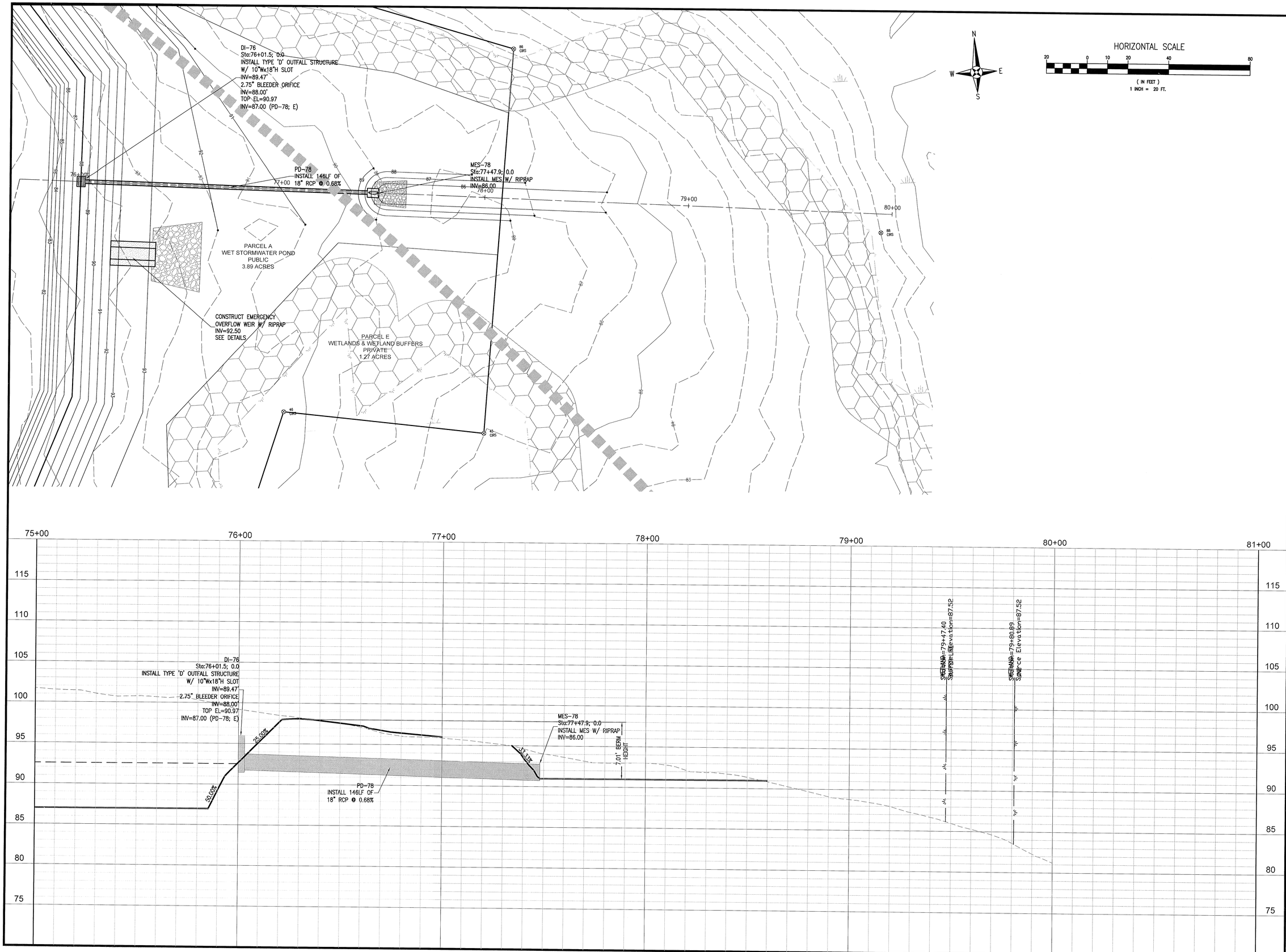

RBA

REBOL-BATTLE & ASSOCIATES
Civil Engineers and Surveyors
2301 N. Ninth Avenue, Suite 300
Pensacola, Florida 32503
Telephone 850.438.0400 Fax 850.438.0448
EB 00009657 LB7916

PLAN & PROFILE

BROOKHAVEN PHASE 4
A 193 LOT SUBDIVISION
PENSACOLA, FLORIDA

No.	DATE	REVISION

SEAL
NOT FOR CONSTRUCTION
PAUL A. BATTLE, P.E.
No. 53126
6/15/22
STATE OF FLORIDA

Dr. By:
Ck By: PAB
Job No.: 2015.035 F
Date: 6/1/2022

DRAWING No.
C6.6

This drawing is the property of Rebol-Battle & Associates, and may not be reproduced without written permission.

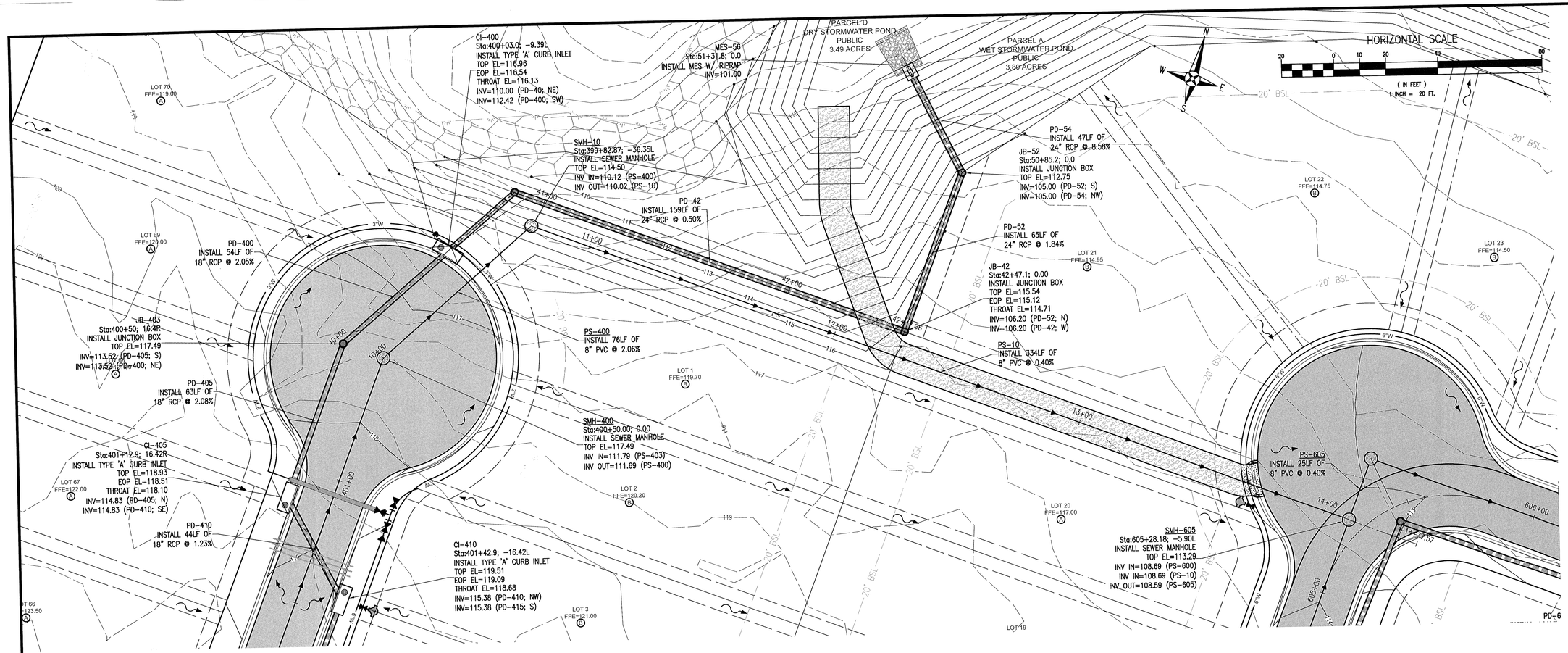

RBA

REBOL-BATTLE & ASSOCIATES
Civil Engineers and Surveyors
2301 N. Ninth Avenue, Suite 300
Pensacola, Florida 32503
Telephone 850.438.0400 Fax 850.438.0448
EB 00009657 LB7916

PLAN & PROFILE

BROOKHAVEN PHASE 4
A 193 LOT SUBDIVISION
PENSACOLA, FLORIDA

No.	DATE	REVISION

SEAL
NOT FOR CONSTRUCTION
PAUL A. BATTLE, P.E.
No. 53126

Dr. By:
Ck By: PAB
Job No.: 2015.035 F
Date: 6/1/2022

DRAWING No.
C6.7

This drawing is the property of Rebol-Battle & Associates, and may not be reproduced without written permission.

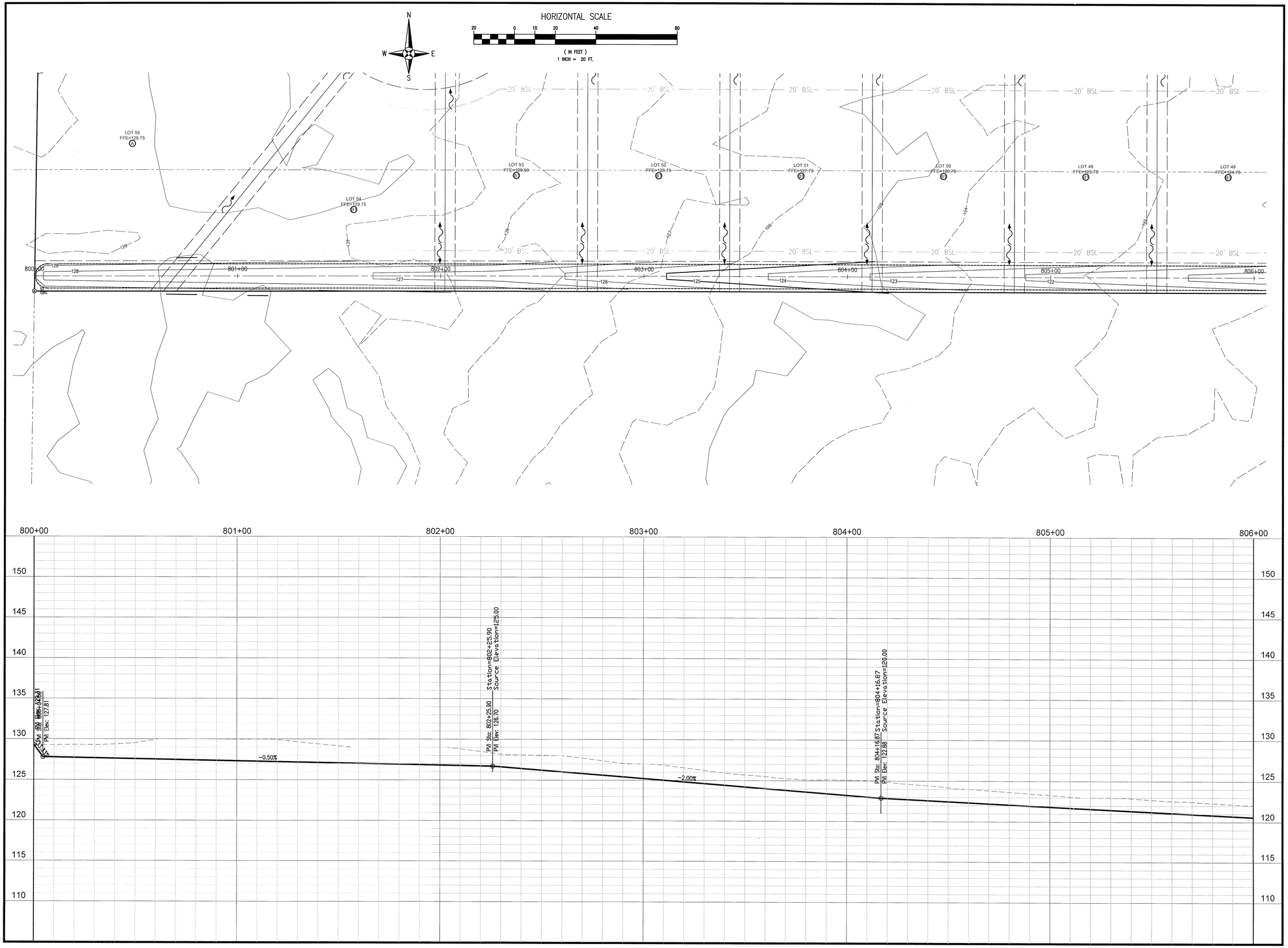

REBOL-BATTLE & ASSOCIATES
Civil Engineers and Surveyors
2301 N. Ninth Avenue Suite 300
Pensacola, Florida 32503
Telephone 850.438.0400 Fax 850.438.0448
EB 00009657 LB7916

PLAN & PROFILE

BROOKHAVEN PHASE 4
A 193 LOT SUBDIVISION
PENSACOLA, FLORIDA

No.	DATE	REVISION

SEAL
NOT FOR CONSTRUCTION
PAUL A. BATTLE
No. 53126
6/1/22
STATE OF
FLORIDA
PAUL A. BATTLE, P.E.
No.53126

Dr. By:
Ck By: PAB
Job No.: 2015.035 F
Date: 6/1/2022

DRAWING No.
C6.8

This drawing is the property of Rebol-Battle & Associates, and may not be reproduced without written permission.

HORIZONTAL SCALE

20 0 10 20 40 80

(IN FEET)
1 INCH = 20 FT.

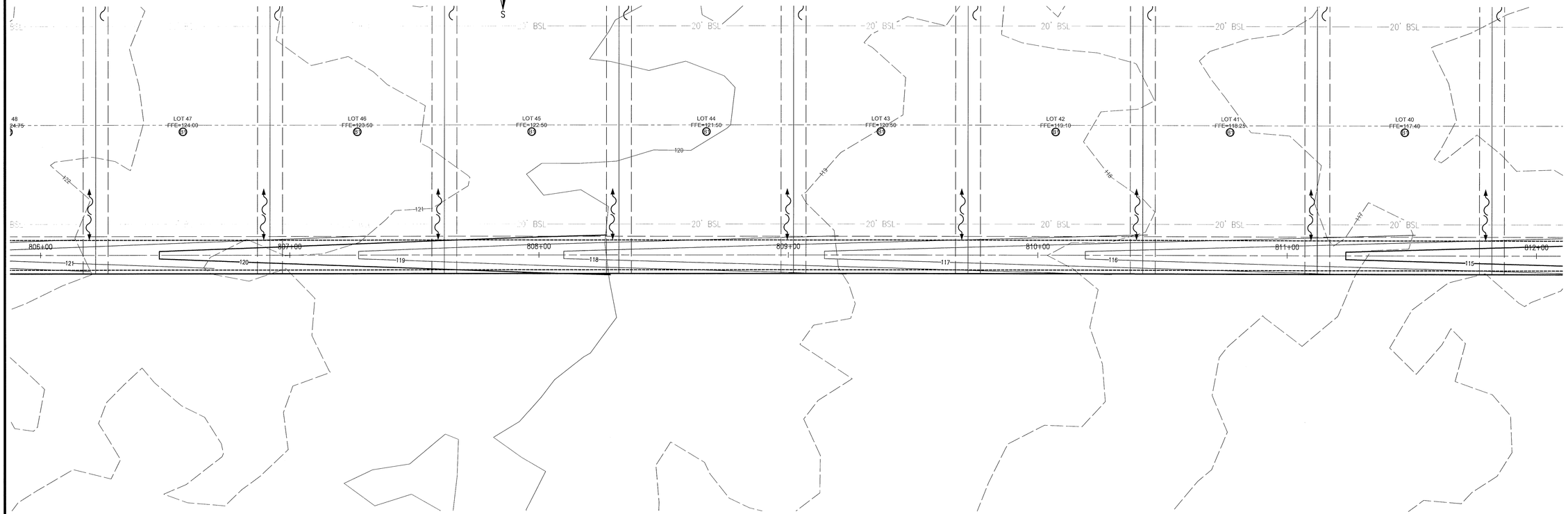

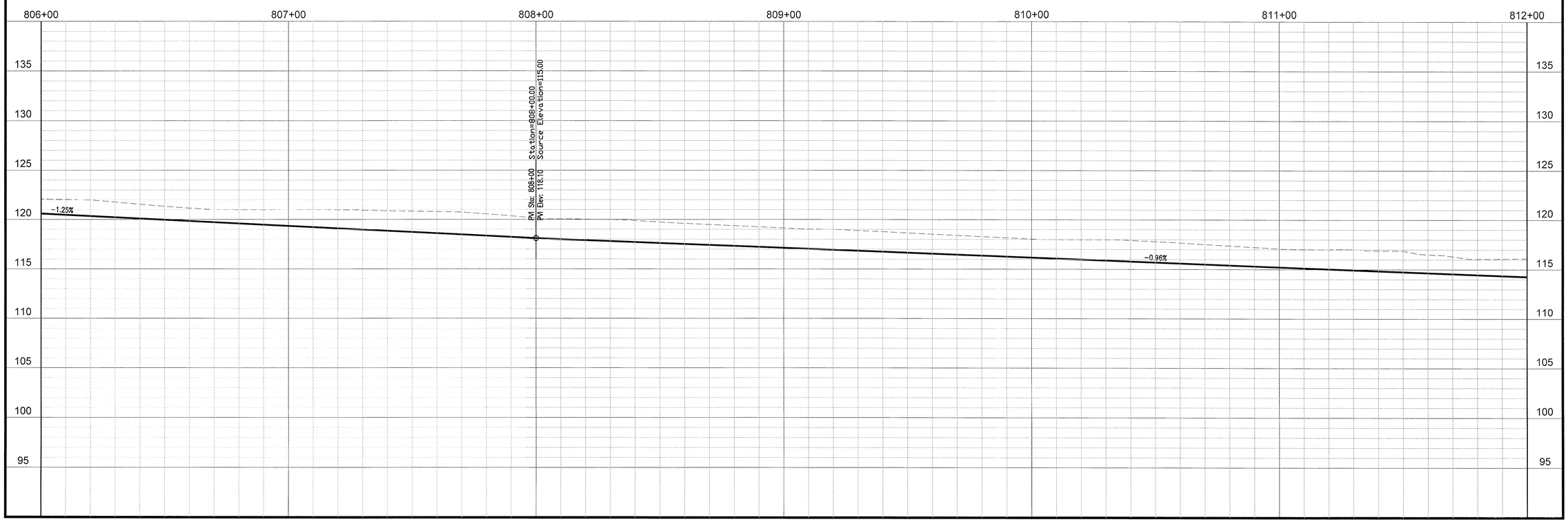

REBOL-BATTLE & ASSOCIATES
Civil Engineers and Surveyors
2301 N. Ninth Avenue, Suite 300
Pensacola, Florida 32503
Telephone: 850.438.1400 Fax: 850.438.0448
EB 00009657 LB7916

PLAN & PROFILE

BROOKHAVEN PHASE 4
A 193 LOT SUBDIVISION
PENSACOLA, FLORIDA

No.	DATE	REVISION

SEAL
NOT FOR CONSTRUCTION
PAUL A. BATTLE LICENSE No. 63126 STATE OF FLORIDA PAUL A. BATTLE, P.E. No.63126
6/15/22

Dr. By:
Ck By: PAB
Job No.: 2015.035 F
Date: 6/1/2022

DRAWING No.
C6.9

This drawing is the property of Rebol-Battle & Associates, and may not be reproduced without written permission.

HORIZONTAL SCALE

20 0 10 20 40 80

(IN FEET)
1 INCH = 20 FT.

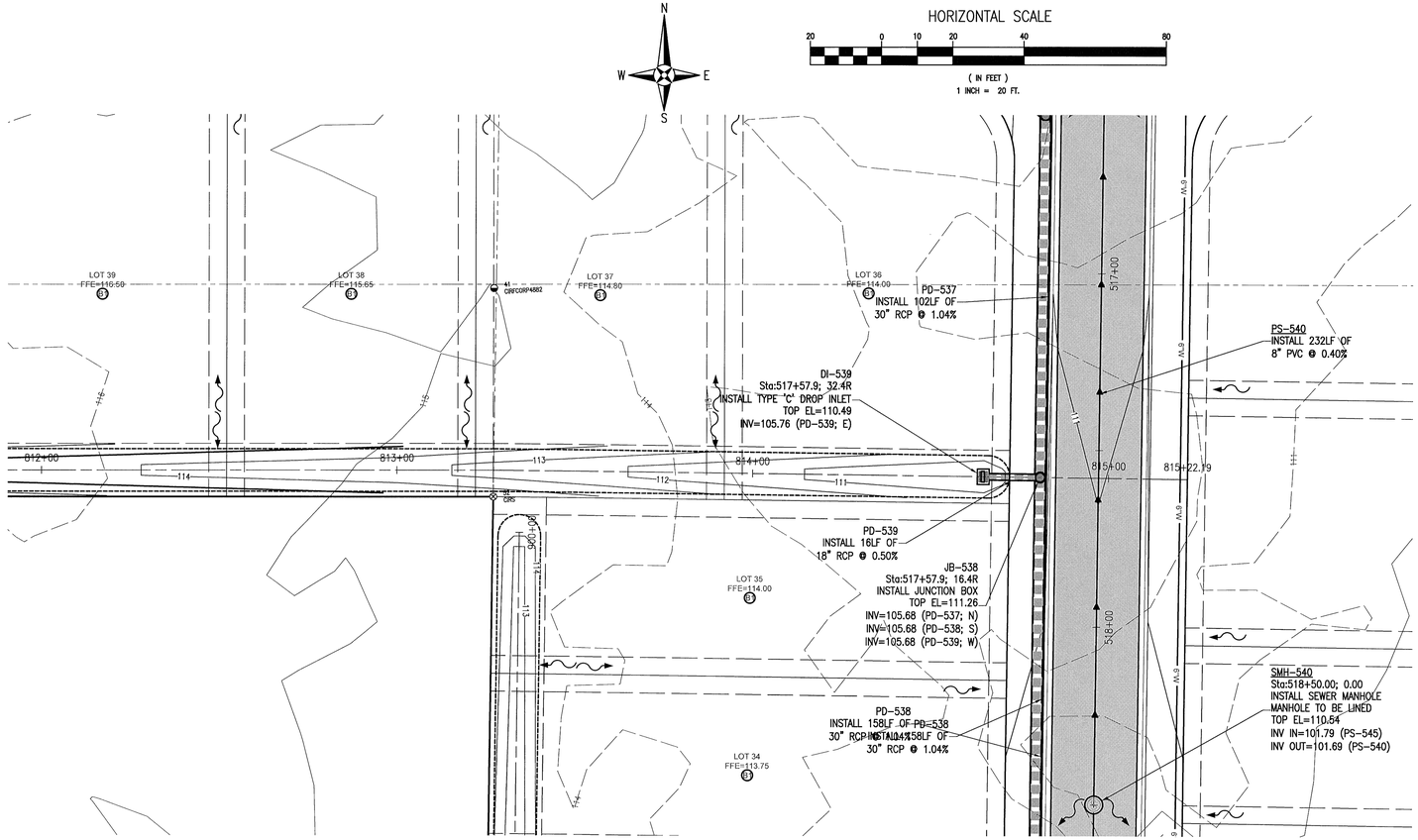

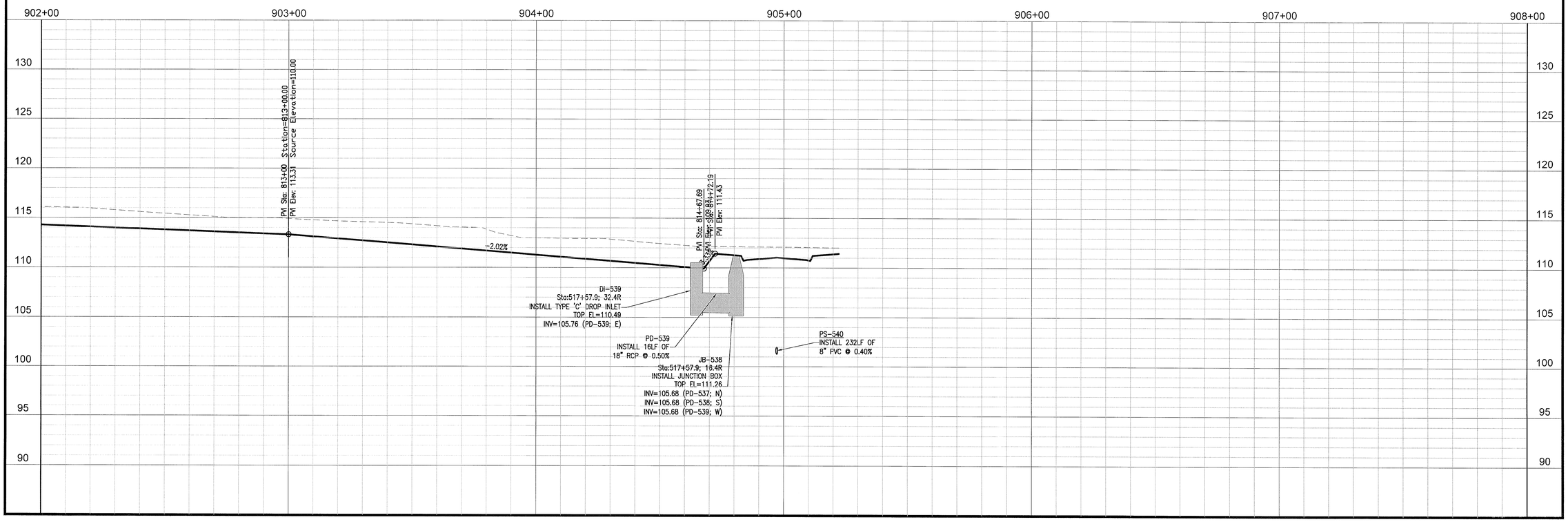

REBOL-BATTLE & ASSOCIATES
Civil Engineers and Surveyors
2301 N. Ninth Avenue, Suite 300
Pensacola, Florida 32503
Telephone: 850.438.1400 Fax: 850.438.0448
EB 00009527 LB7916

PLAN & PROFILE

BROOKHAVEN PHASE 4
A 193 LOT SUBDIVISION
PENSACOLA, FLORIDA

No.	DATE	REVISION

SEAL
NOT FOR CONSTRUCTION
PAUL A. BATTLE
LICENSE
No. 53126
4/5/22
STATE OF
FLORIDA
PAUL A. BATTLE, P.E.
No. 53126

Dr. By:
Ck By: PAB
Job No.: 2015.035 F
Date: 6/1/2022

DRAWING No.
C6.10

This drawing is the property of Rebol-Battle & Associates, and may not be reproduced without written permission.

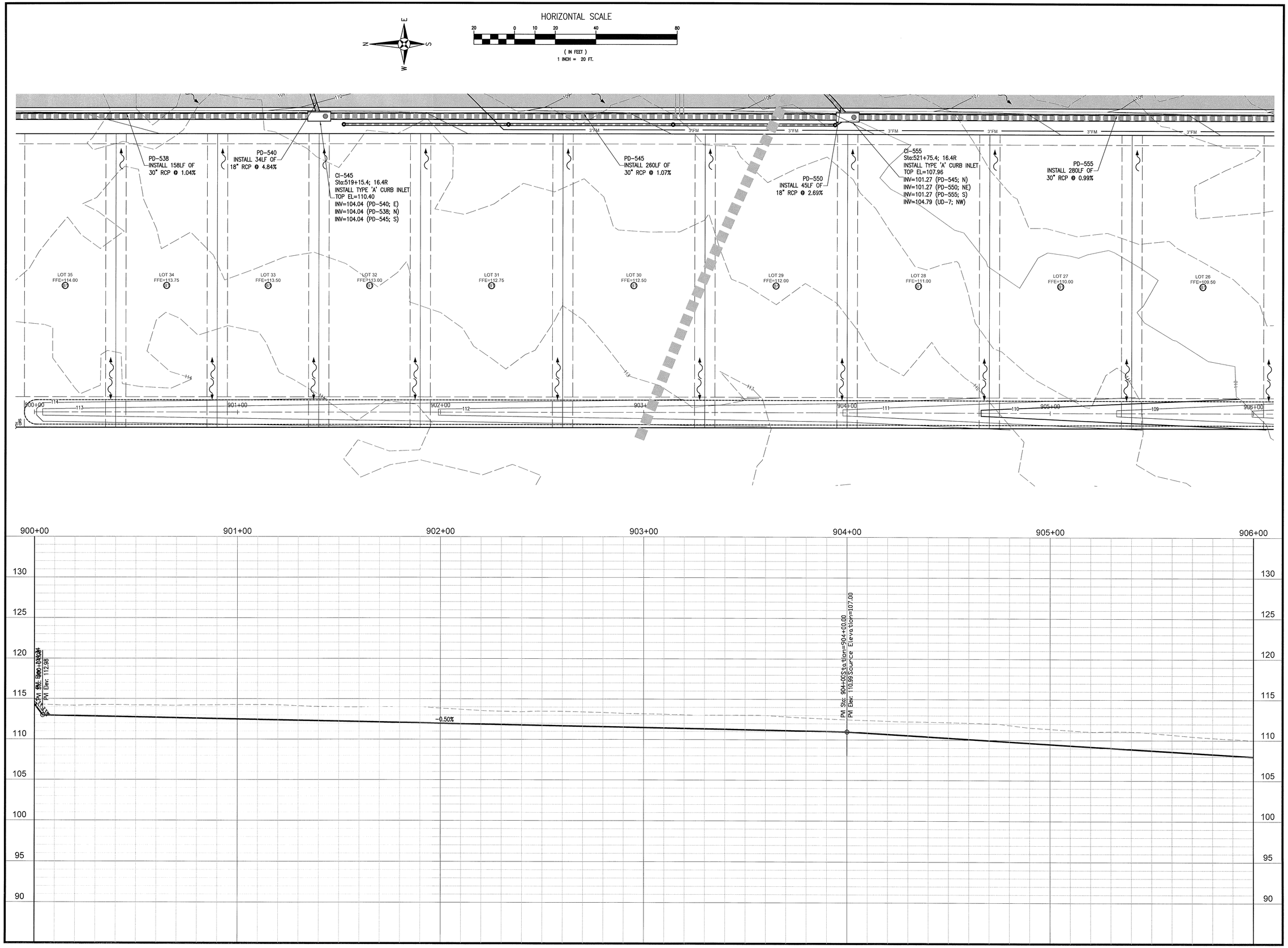

REBOL-BATTLE & ASSOCIATES
Civil Engineers and Surveyors
2301 N. Ninth Avenue, Suite 300
Pensacola, Florida 32503
Telephone 850.438.0400 Fax 850.438.0448
EB 00009657 LB7916

PLAN & PROFILE

BROOKHAVEN PHASE 4
A 193 LOT SUBDIVISION
PENSACOLA, FLORIDA

No.	DATE	REVISION

SEAL
NOT FOR CONSTRUCTION
PAUL A. BATTLE
LICENSE No. 53126
6/15/22
STATE OF FLORIDA
PAUL A. BATTLE, P.E.
No. 53126

Dr. By:
Ck By: PAB
Job No.: 2015.035 F
Date: 6/1/2022

DRAWING No.
C6.11

This drawing is the property of Rebol-Battle & Associates, and may not be reproduced without written permission.

HORIZONTAL SCALE

20 0 10 20 40 80

(IN FEET)
1 INCH = 20 FT.

PD-560
INSTALL 45LF OF
18" RCP @ 2.67%

PD-555
INSTALL 280LF OF
30" RCP @ 0.99%

CI-565
Sta:524+55.4; 16.4R
INSTALL TYPE 'A' CURB INLET
TOP EL=104.60
INV=98.50 (PD-555; N)
INV=98.50 (PD-560; NE)
INV=98.50 (PD-565; S)

PD-565
INSTALL 210LF OF
30" RCP @ 1.62%

CI-575
Sta:526+65.4; 16.4R
INSTALL TYPE DOUBLE 'A' CURB INLET
TOP EL=101.99
INV=95.10 (PD-565; N)
INV=95.10 (PD-575; SE)

PD-575
INSTALL 54LF OF
30" RCP @ 0.49%

LOT 25
FFE=109.00

LOT 24
FFE=108.00

LOT 23
FFE=107.00

LOT 22
FFE=105.00

LOT 21
FFE=104.00

LOT 20
FFE=103.75

LOT 19
FFE=104.00

PARCEL E
WETLANDS & WETLAND BUFFERS
PRIVATE
1.27 ACRES

PARCEL E
WETLANDS & WETLAND BUFFERS
PRIVATE
1.27 ACRES

906+00 907+00 908+00 909+00 910+00 911+00 911+31.93

120 115 110 105 100 95 90 85 80

-1.50%

PVI Sta: 908+58.94
PVI Elev: 104.11Source Elevation=100.00

-3.51%

PVI Sta: 911+17.99
PVI Elev: 95.00

0.00%

PVI Sta: 911+31.93
PVI Elev: 95.00

REBOL-BATTLE & ASSOCIATES
Civil Engineers and Surveyors
2351 N. Ninth Avenue, Suite 300
Pensacola, Florida 32503
Telephone: 850.438.0400 Fax 850.438.0448
EB 0000962 LB7916

PLAN & PROFILE

BROOKHAVEN PHASE 4
A 193 LOT SUBDIVISION
PENSACOLA, FLORIDA

No.	DATE	REVISION

SEAL
NOT FOR CONSTRUCTION
PAUL A. BATTLE
LICENSED
No. 63126
STATE OF
PAUL A. BATTLE, P.E.
No.63126

Dr. By:
Ck By: PAB
Job No.: 2015.035 F
Date: 6/1/2022

DRAWING No.
C6.12

This drawing is the property of Rebol-Battle & Associates, and may not be reproduced without written permission.

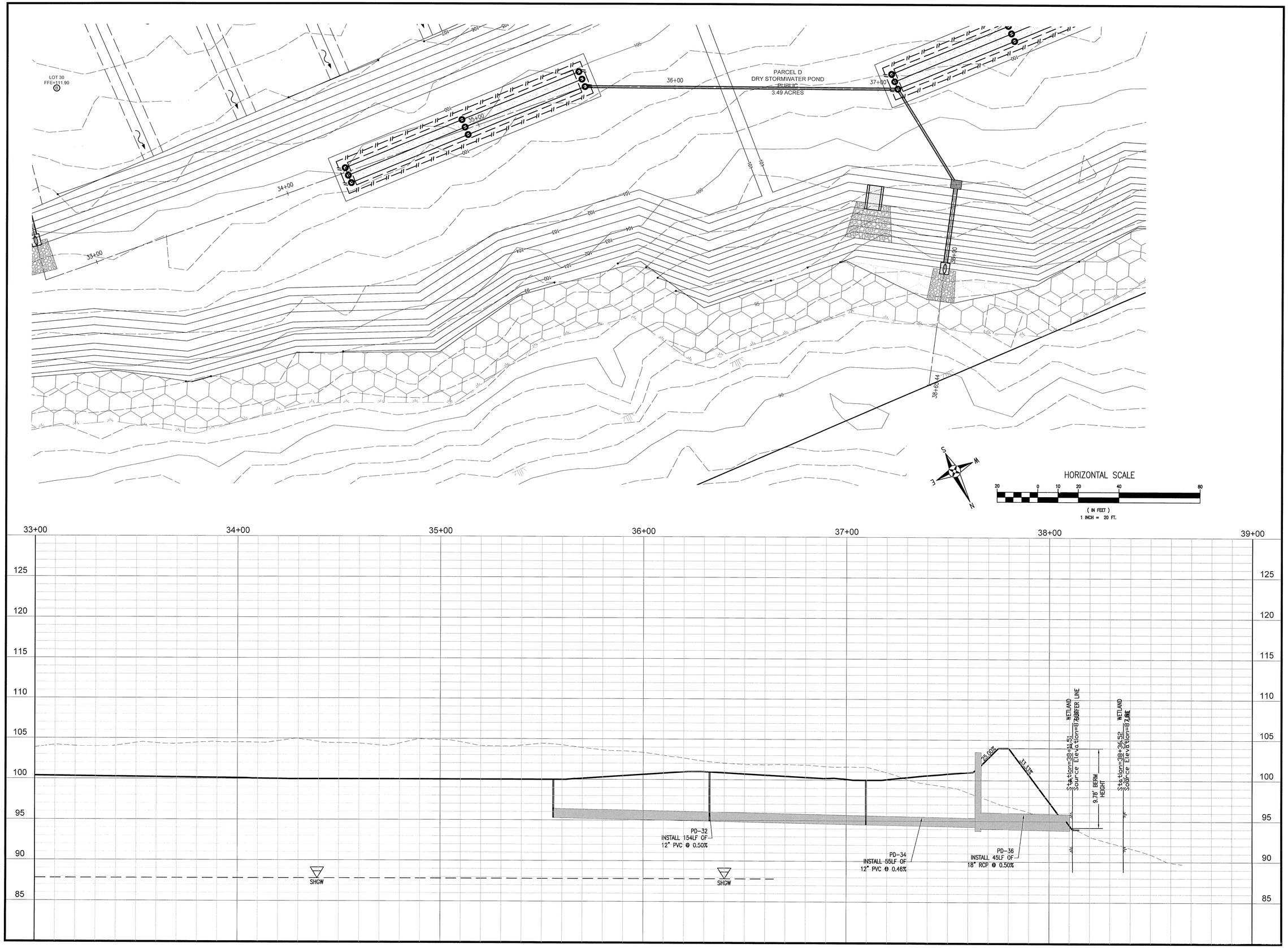

RBA
REBOL-BATTLE & ASSOCIATES
Civil Engineers and Surveyors
2301 N. Ninth Avenue, Suite 300
Pensacola, Florida 32503
Telephone 850.438.0400 Fax 850.438.0448
EB 00009657 LB7916

PLAN & PROFILE

BROOKHAVEN PHASE 4

A 193 LOT SUBDIVISION
PENSACOLA, FLORIDA

No.	DATE	REVISION

SEAL
NOT FOR CONSTRUCTION
PAUL A. BATTLE
No. 53126
6/15/22
STATE OF
PAUL A. BATTLE, P.E.
No. 53126

Dr. By:
Ck By: PAB
Job No.: 2015.035 F
Date: 6/1/2022

DRAWING No.
C6.13

This drawing is the property of Rebol-Battle & Associates, and may not be reproduced without written permission.

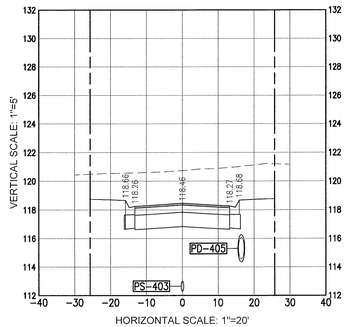

WATER BIRCH RD - Sta 401+00

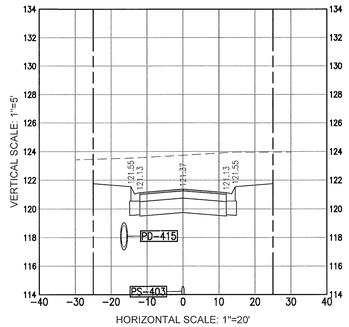

WATER BIRCH RD - Sta 402+50

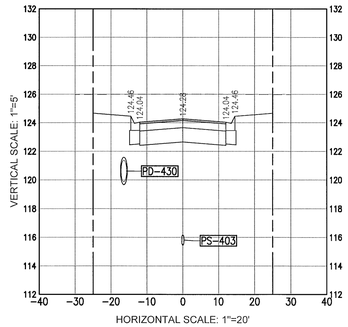

WATER BIRCH RD - Sta 404+00

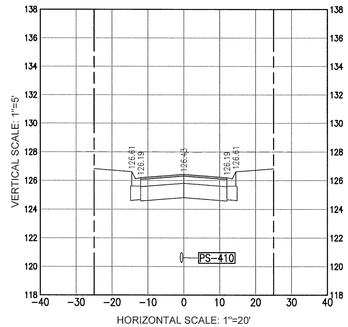

WATER BIRCH RD - Sta 405+50

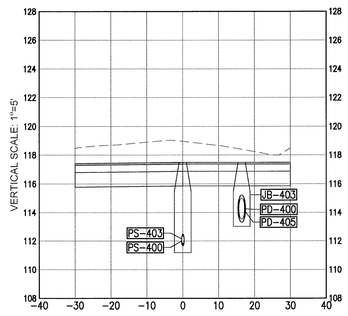

WATER BIRCH RD - Sta 400+50

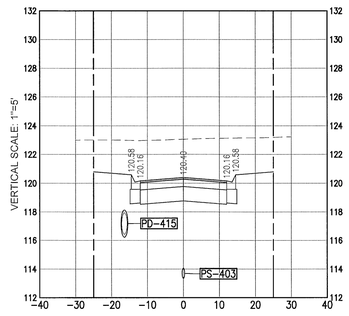

WATER BIRCH RD - Sta 402+00

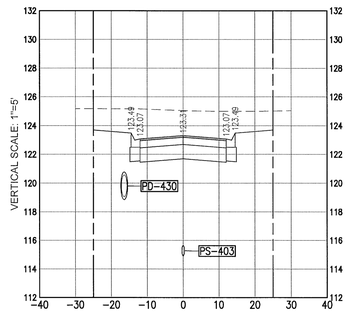

WATER BIRCH RD - Sta 403+50

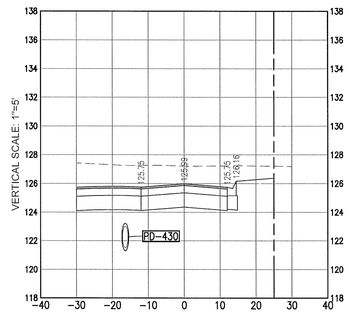

WATER BIRCH RD - Sta 405+00

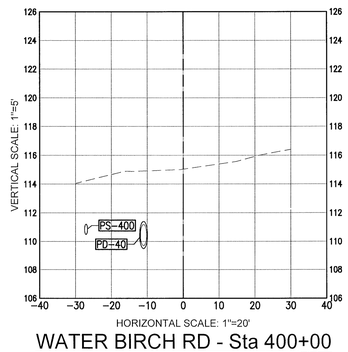

WATER BIRCH RD - Sta 400+00

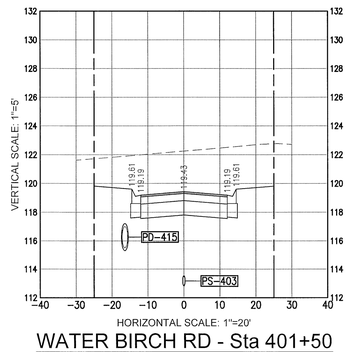

WATER BIRCH RD - Sta 401+50

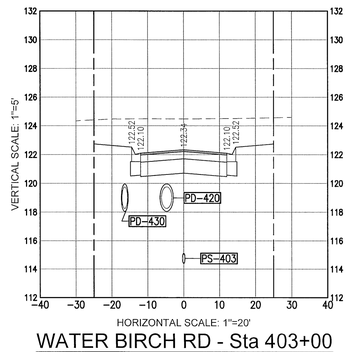

WATER BIRCH RD - Sta 403+00

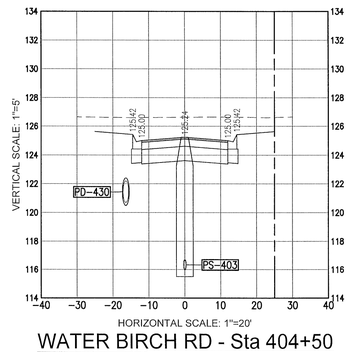

WATER BIRCH RD - Sta 404+50

REBOL-BATTLE & ASSOCIATES
Civil Engineers and Surveyors
2301 N. Ninth Avenue, Suite 300
Pensacola, Florida 32503
Telephone 850.438.0400 Fax 850.438.0448
EB 00006657 LB7916

CROSS SECTIONS

BROOKHAVEN PHASE 4
A 193 LOT SUBDIVISION
PENSACOLA, FLORIDA

No.	DATE	REVISION

SEAL
NOT FOR CONSTRUCTION
PAUL A. BATTLE, P.E.
LICENSE NO. 61126
STATE OF FLORIDA

Dr. By:
Ck By: PAB
Job No.: 2015.035 F
Date: 6/1/2022

DRAWING No.
C7.0
SHEET 64

This drawing is the property of Rebol-Battle & Associates, and may not be reproduced without written permission.

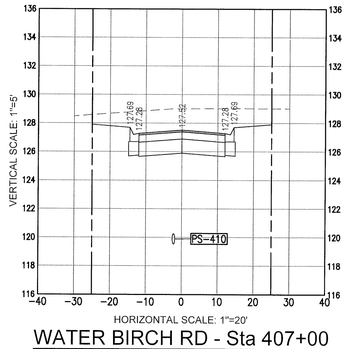

WATER BIRCH RD - Sta 407+00

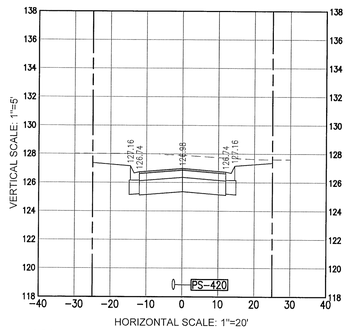

WATER BIRCH RD - Sta 408+50

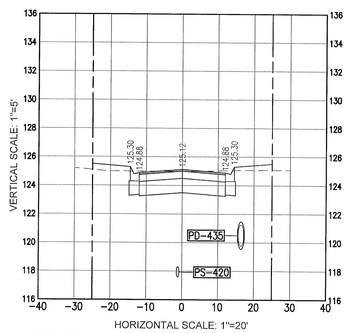

WATER BIRCH RD - Sta 410+00

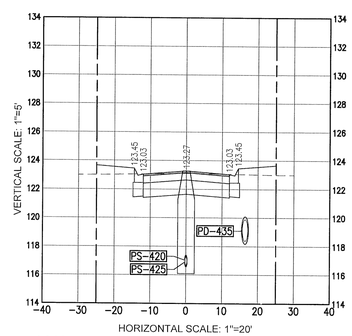

WATER BIRCH RD - Sta 411+50

WATER BIRCH RD - Sta 406+50

WATER BIRCH RD - Sta 408+00

WATER BIRCH RD - Sta 409+50

WATER BIRCH RD - Sta 411+00

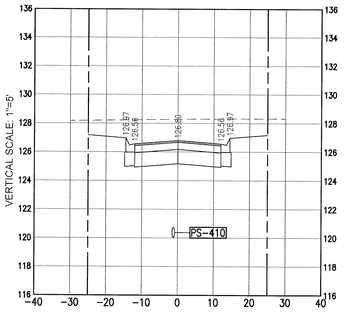

WATER BIRCH RD - Sta 406+00

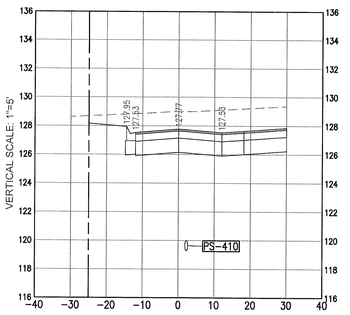

WATER BIRCH RD - Sta 407+50

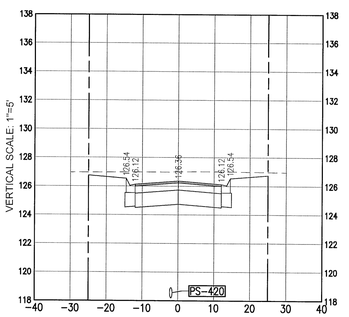

WATER BIRCH RD - Sta 409+00

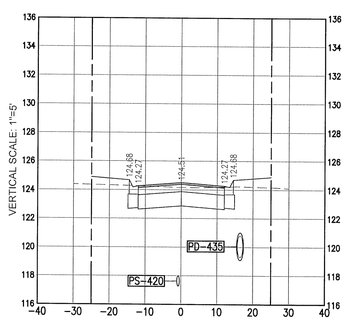

WATER BIRCH RD - Sta 410+50

REBOL-BATTLE & ASSOCIATES
Civil Engineers and Surveyors
2301 N. Ninth Avenue, Suite 300
Pensacola, Florida 32503
Telephone 850.438.0400 Fax 850.438.0448
EB 00009657 LB7916

CROSS SECTIONS

BROOKHAVEN PHASE 4
A 193 LOT SUBDIVISION
PENSACOLA, FLORIDA

No.	DATE	REVISION

SEAL
NOT FOR CONSTRUCTION
PAUL A. BATTLE, P.E.
No.53126
STATE OF FLORIDA

Dr. By:
Ck By: PAB
Job No.: 2015.035 F
Date: 6/1/2022

DRAWING No.
C7.1
SHEET 65

This drawing is the property of Rebol-Battle & Associates, and may not be reproduced without written permission.

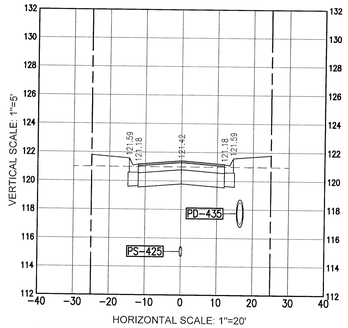

WATER BIRCH RD - Sta 413+00

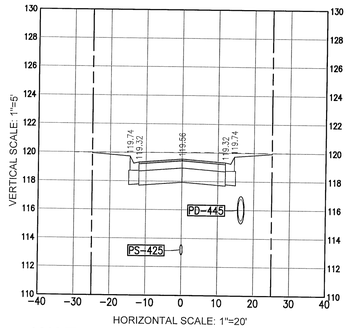

WATER BIRCH RD - Sta 414+50

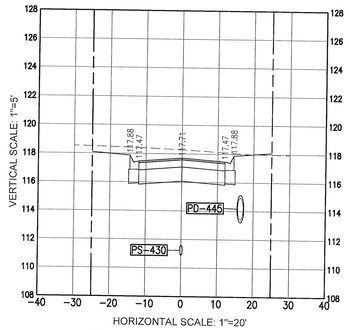

WATER BIRCH RD - Sta 416+00

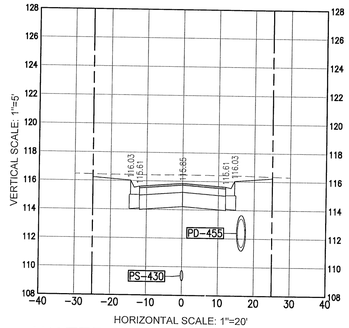

WATER BIRCH RD - Sta 417+50

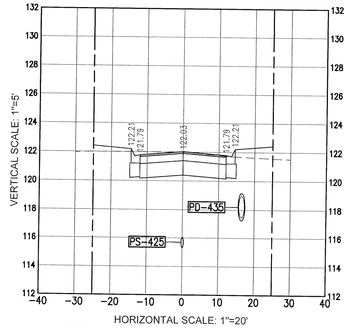

WATER BIRCH RD - Sta 412+50

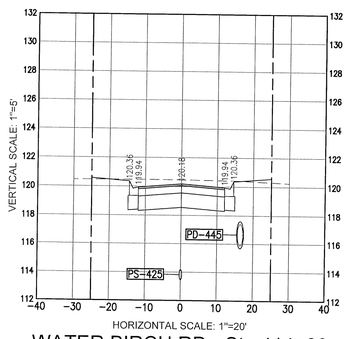

WATER BIRCH RD - Sta 414+00

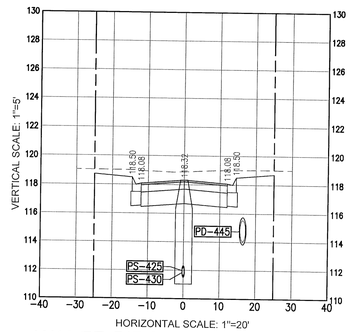

WATER BIRCH RD - Sta 415+50

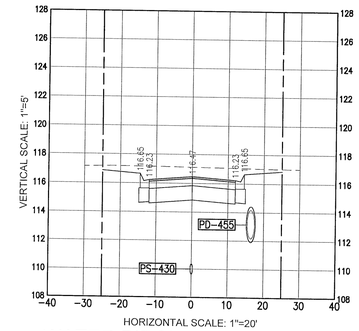

WATER BIRCH RD - Sta 417+00

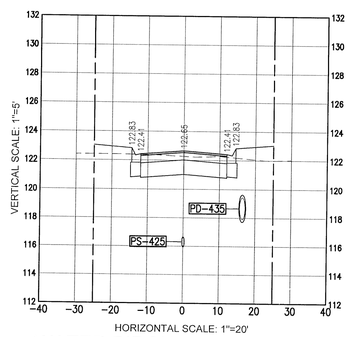

WATER BIRCH RD - Sta 412+00

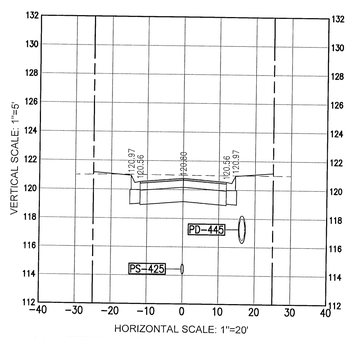

WATER BIRCH RD - Sta 413+50

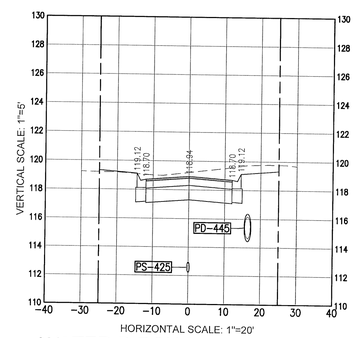

WATER BIRCH RD - Sta 415+00

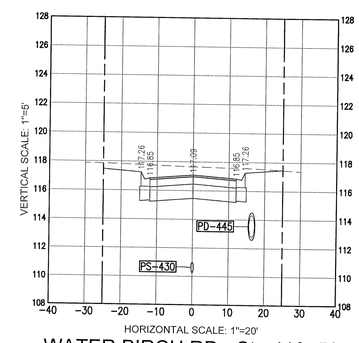

WATER BIRCH RD - Sta 416+50

REBOL-BATTLE & ASSOCIATES
Civil Engineers and Surveyors
2301 N. Ninth Avenue, Suite 300
Pensacola, Florida 32503
Telephone 850.438.0400 Fax 850.438.0448
EB 00009657 LB7916

CROSS SECTIONS

BROOKHAVEN PHASE 4
A 193 LOT SUBDIVISION
PENSACOLA, FLORIDA

No.	DATE	REVISION

SEAL
NOT FOR CONSTRUCTION
PAUL A. BATTLE, P.E.
No. 53126
STATE OF FLORIDA
6/15/22

Dr. By:
Ck By: PAB
Job No.: 2015.035 F
Date: 6/1/2022

DRAWING No.
C7.2
SHEET 66

This drawing is the property of Rebol-Battle & Associates, and may not be reproduced without written permission.

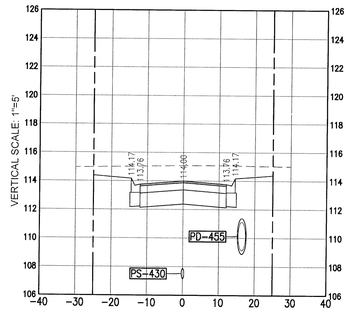

WATER BIRCH RD - Sta 419+00

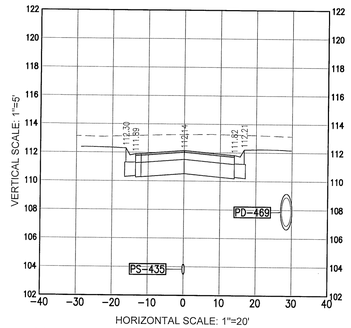

WATER BIRCH RD - Sta 420+50

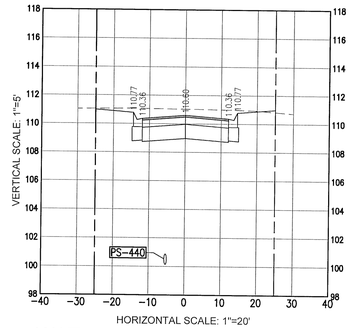

WATER BIRCH RD - Sta 422+00

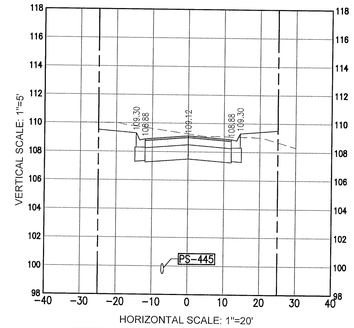

WATER BIRCH RD - Sta 423+50

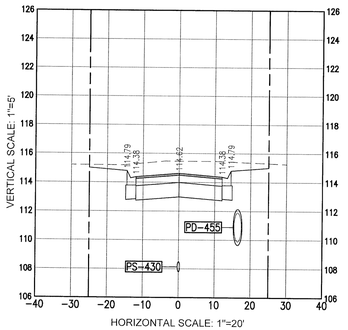

WATER BIRCH RD - Sta 418+50

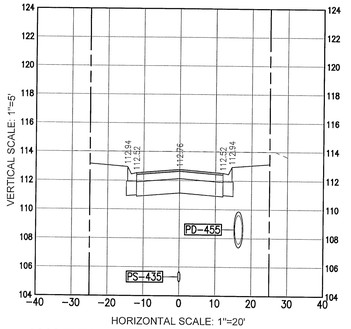

WATER BIRCH RD - Sta 420+00

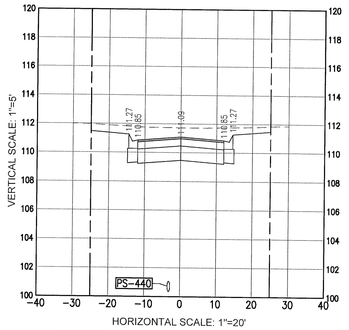

WATER BIRCH RD - Sta 421+50

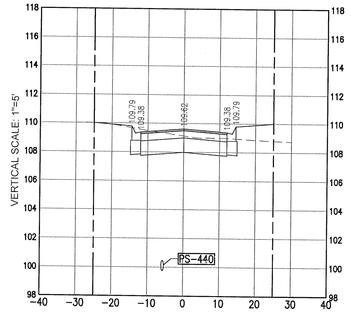

WATER BIRCH RD - Sta 423+00

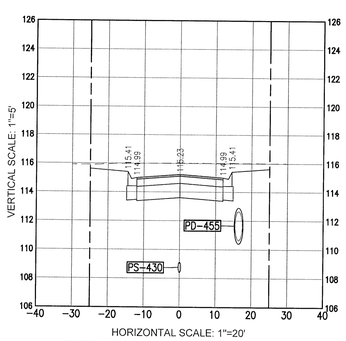

WATER BIRCH RD - Sta 418+00

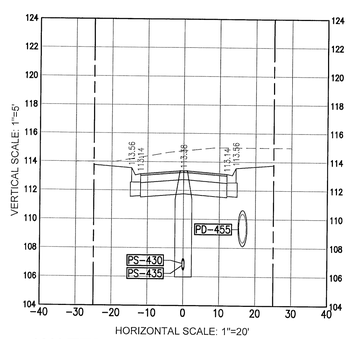

WATER BIRCH RD - Sta 419+50

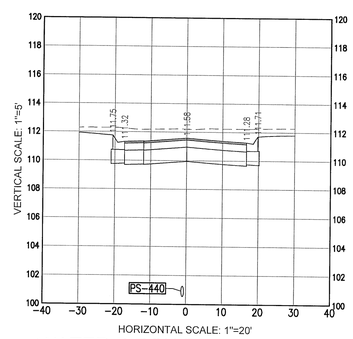

WATER BIRCH RD - Sta 421+00

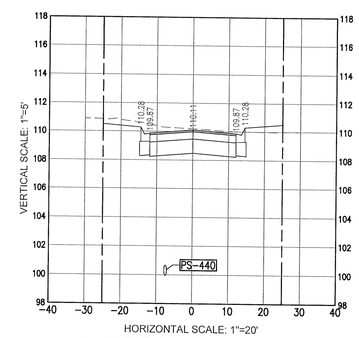

WATER BIRCH RD - Sta 422+50

RBA
REBOL-BATTLE & ASSOCIATES
Civil Engineers and Surveyors
2301 N. Ninth Avenue, Suite 300
Pensacola, Florida 32503
Telephone 850.438.0400 Fax 850.438.0448
EB 00009657 LB7916

CROSS SECTIONS

BROOKHAVEN PHASE 4
A 193 LOT SUBDIVISION
PENSACOLA, FLORIDA

No.	DATE	REVISION

SEAL
NOT FOR CONSTRUCTION
PAUL A. BATTLE, P.E.
No. 53126
6/15/22
STATE OF FLORIDA

Dr. By:
Ck By: PAB
Job No.: 2015.035 F
Date: 6/1/2022

DRAWING No.
C7.3
SHEET 67

This drawing is the property of Rebol-Battle & Associates, and may not be reproduced without written permission.

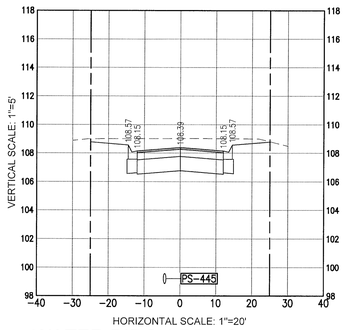

WATER BIRCH RD - Sta 425+00

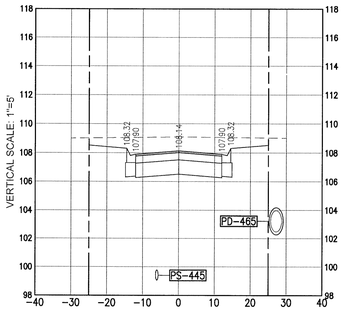

WATER BIRCH RD - Sta 424+50

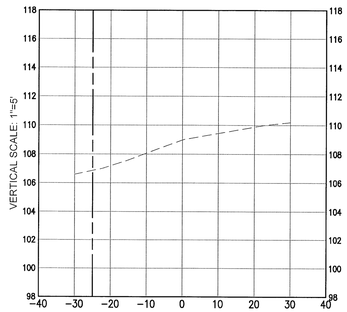

WATER BIRCH RD - Sta 426+00

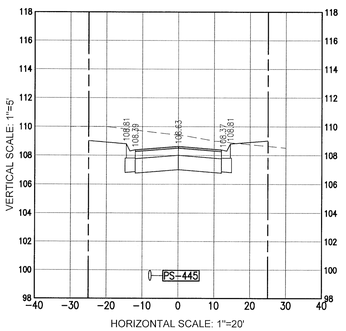

WATER BIRCH RD - Sta 424+00

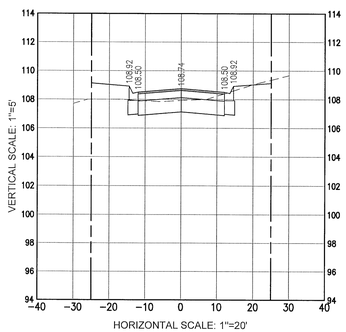

WATER BIRCH RD - Sta 425+50

RBA
REBOL-BATTLE & ASSOCIATES
Civil Engineers and Surveyors
2301 N. Ninth Avenue, Suite 300
Pensacola, Florida 32503
Telephone 850.438.0400 Fax 850.438.0448
EB 00009657 LB7916

CROSS SECTIONS

BROOKHAVEN PHASE 4
A 193 LOT SUBDIVISION
PENSACOLA, FLORIDA

No.	DATE	REVISION

SEAL
NOT FOR CONSTRUCTION
PAUL A. BATTLE, P.E.
No. 53126

Dr. By:
Ck By: PAB
Job No.: 2015.035 F
Date: 6/1/2022

DRAWING No.
C7.4
SHEET 68

This drawing is the property of Rebol-Battle & Associates, and may not be reproduced without written permission.

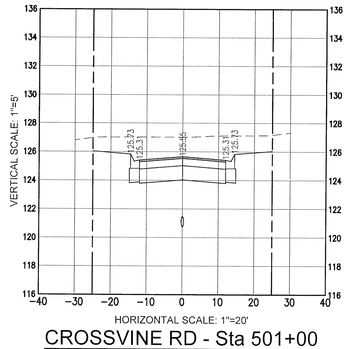

CROSSVINE RD - Sta 501+00

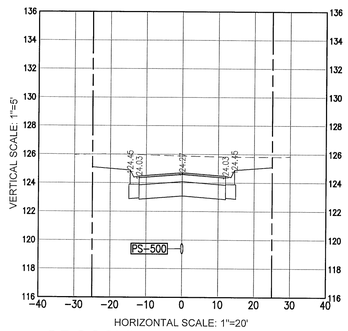

CROSSVINE RD - Sta 502+50

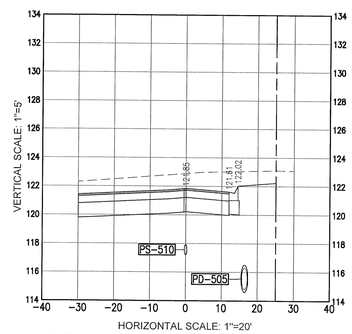

CROSSVINE RD - Sta 504+00

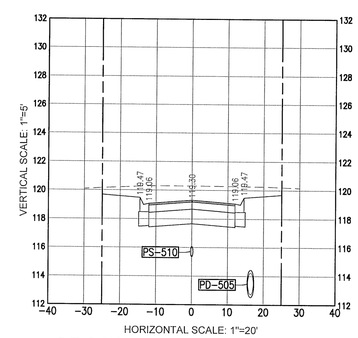

CROSSVINE RD - Sta 505+50

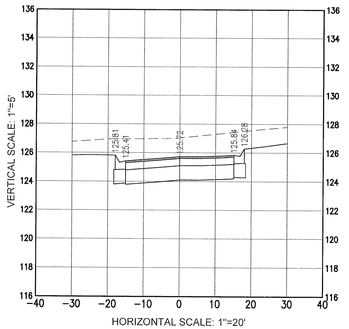

CROSSVINE RD - Sta 500+50

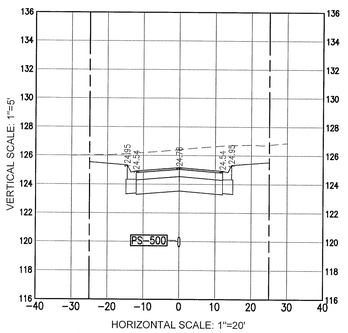

CROSSVINE RD - Sta 502+00

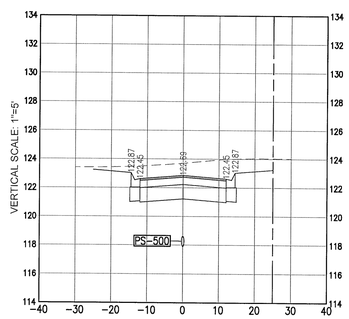

CROSSVINE RD - Sta 503+50

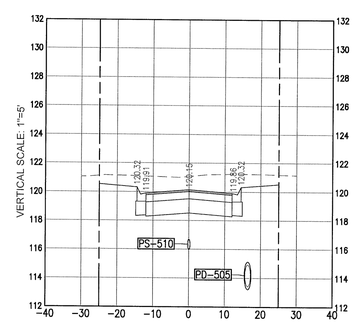

CROSSVINE RD - Sta 505+00

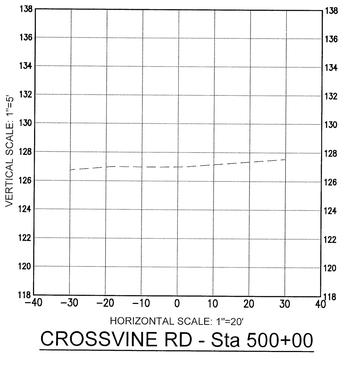

CROSSVINE RD - Sta 500+00

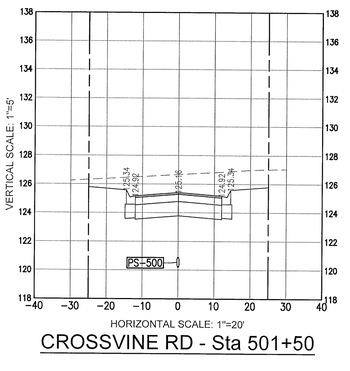

CROSSVINE RD - Sta 501+50

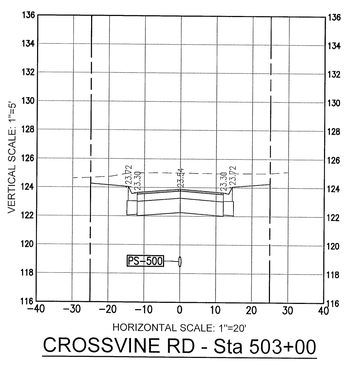

CROSSVINE RD - Sta 503+00

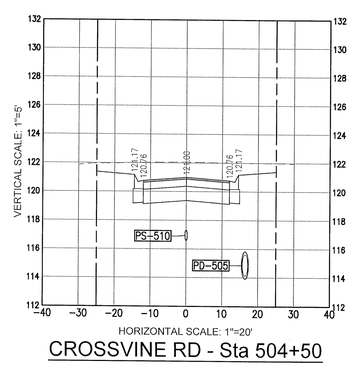

CROSSVINE RD - Sta 504+50

REBOL-BATTLE & ASSOCIATES
Civil Engineers and Surveyors
2301 N. Ninth Avenue, Suite 300
Pensacola, Florida 32503
Telephone 850.438.0400 Fax 850.438.0448
EB 0000687 LB7916

CROSS SECTIONS

BROOKHAVEN PHASE 4
A 193 LOT SUBDIVISION
PENSACOLA, FLORIDA

No.	DATE	REVISION

SEAL
NOT FOR CONSTRUCTION
PAUL A. BATTLE, P.E.
LICENSE NO. 53728
STATE OF FLORIDA
6/15/22
PAUL A. BATTLE, P.E.
No. 53728

Dr. By:
Ck By: PAB
Job No.: 2015.035 F
Date: 6/1/2022

DRAWING No.
C7.5
SHEET 69

This drawing is the property of Rebol-Battle & Associates, and may not be reproduced without written permission.

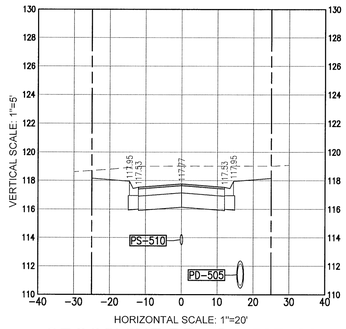

CROSSVINE RD - Sta 507+00

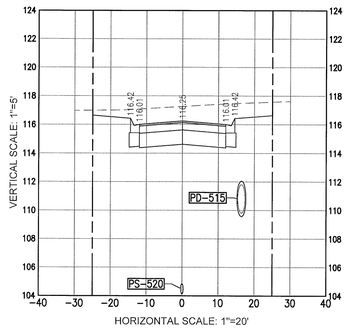

CROSSVINE RD - Sta 508+50

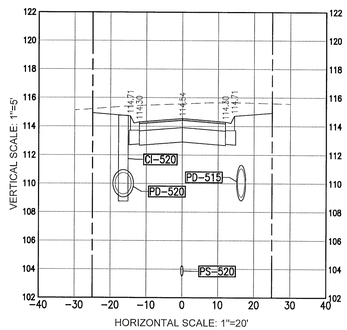

CROSSVINE RD - Sta 510+00

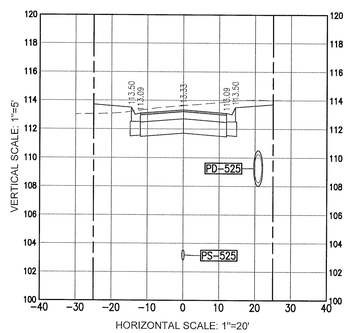

CROSSVINE RD - Sta 511+50

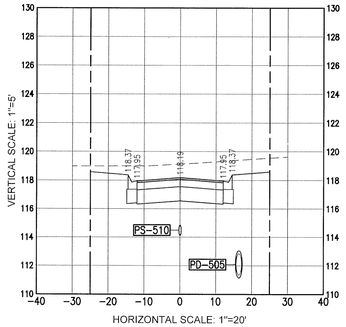

CROSSVINE RD - Sta 506+50

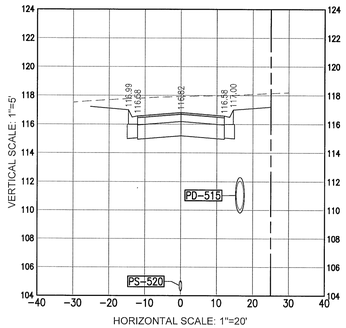

CROSSVINE RD - Sta 508+00

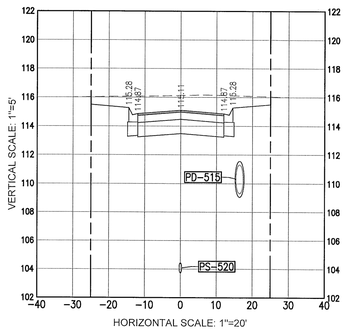

CROSSVINE RD - Sta 509+50

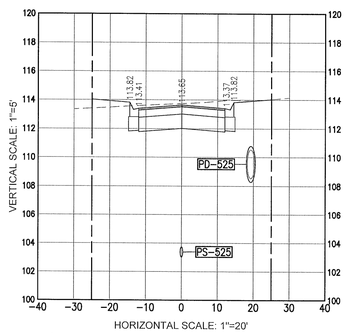

CROSSVINE RD - Sta 511+00

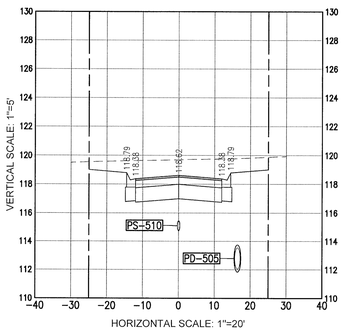

CROSSVINE RD - Sta 506+00

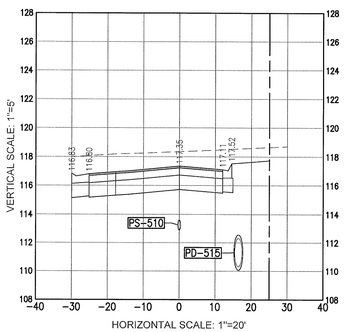

CROSSVINE RD - Sta 507+50

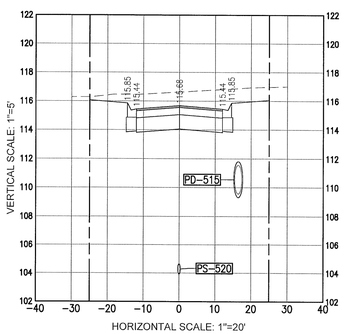

CROSSVINE RD - Sta 509+00

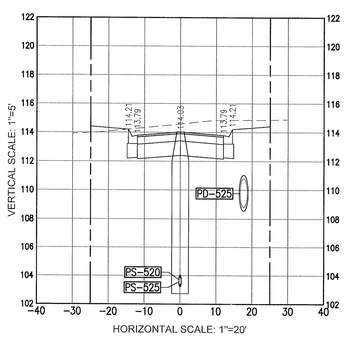

CROSSVINE RD - Sta 510+50

REBOL-BATTLE & ASSOCIATES
Civil Engineers and Surveyors
2301 N. Ninth Avenue, Suite 300
Pensacola, Florida 32503
Telephone 850.438.0400 Fax 850.438.0446
EB 00009657 LB7916

CROSS SECTIONS

BROOKHAVEN PHASE 4
A 193 LOT SUBDIVISION
PENSACOLA, FLORIDA

No.	DATE	REVISION

SEAL
NOT FOR CONSTRUCTION
PAUL A. BATTLE
No. 53126
6/13/22
STATE OF
PAUL A. BATTLE, P.E.
No. 53126

Dr. By:
Ck By: PAB
Job No.: 2015.035 F
Date: 6/1/2022

DRAWING No.
C7.6
SHEET 70

This drawing is the property of Rebol-Battle & Associates, and may not be reproduced without written permission.

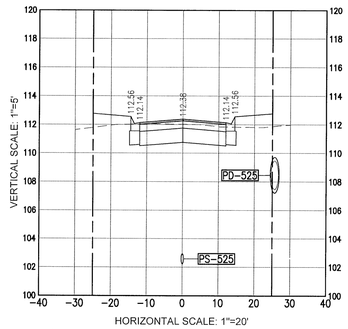

CROSSVINE RD - Sta 513+00

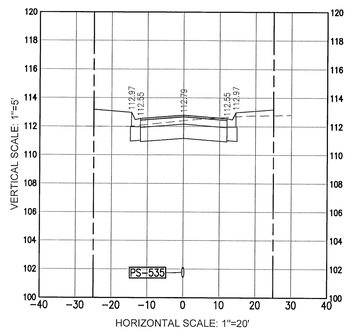

CROSSVINE RD - Sta 514+50

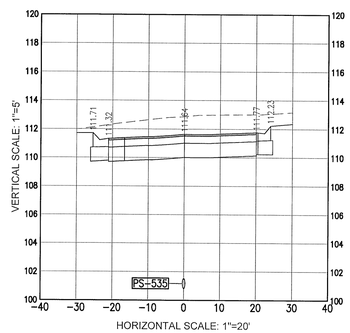

CROSSVINE RD - Sta 516+00

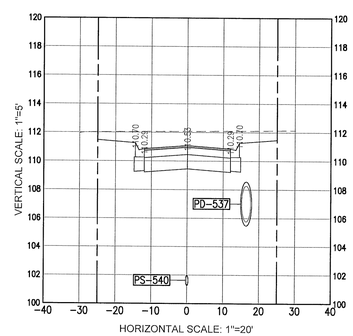

CROSSVINE RD - Sta 517+50

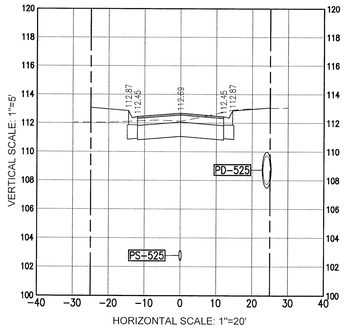

CROSSVINE RD - Sta 512+50

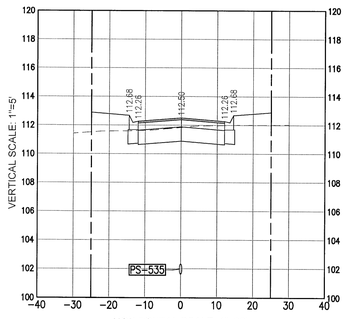

CROSSVINE RD - Sta 514+00

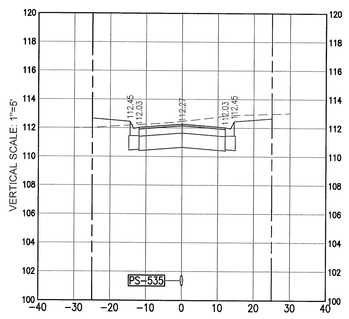

CROSSVINE RD - Sta 515+50

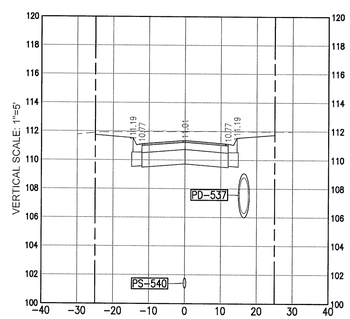

CROSSVINE RD - Sta 517+00

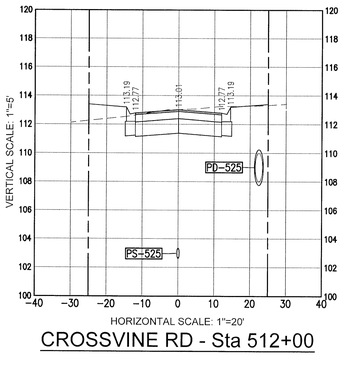

CROSSVINE RD - Sta 512+00

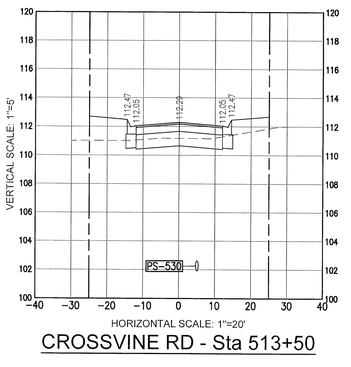

CROSSVINE RD - Sta 513+50

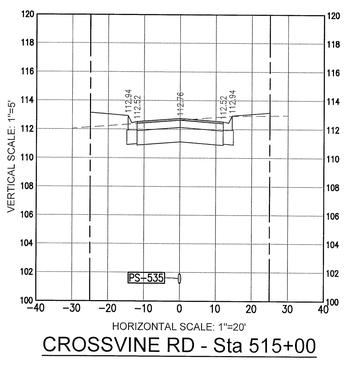

CROSSVINE RD - Sta 515+00

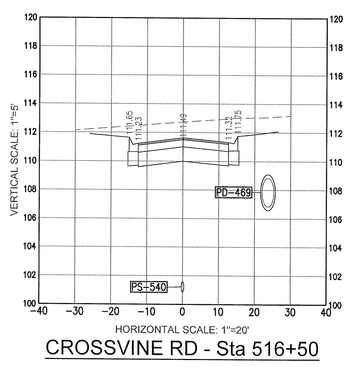

CROSSVINE RD - Sta 516+50

REBOL-BATTLE & ASSOCIATES
Civil Engineers and Surveyors
2301 N. Ninth Avenue, Suite 300
Pensacola, Florida 32503
(850) 438-9661 Fax (850) 438-9448
Telephone #2 (850) 857-1915
EB 00026857 LB7916

CROSS SECTIONS

BROOKHAVEN PHASE 4
A 193 LOT SUBDIVISION
PENSACOLA, FLORIDA

No.	DATE	REVISION

SEAL
NOT FOR CONSTRUCTION
PAUL A. BATTLE P.E. LICENSE No. 53126 STATE OF FLORIDA
4/15/22

Dr. By:
Ck By: PAB
Job No.: 2015.035 F
Date: 6/1/2022

DRAWING No.
C7.7
SHEET 71

This drawing is the property of Rebol-Battle & Associates, and may not be reproduced without written permission.

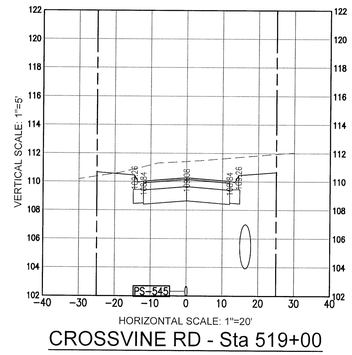

CROSSVINE RD - Sta 519+00

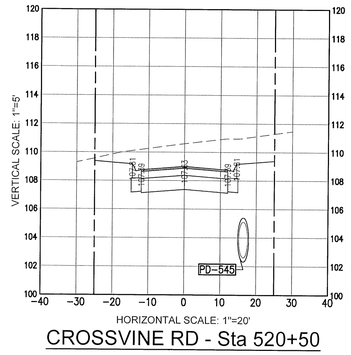

CROSSVINE RD - Sta 520+50

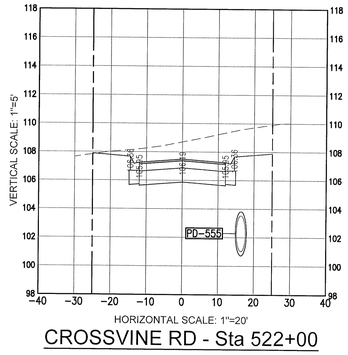

CROSSVINE RD - Sta 522+00

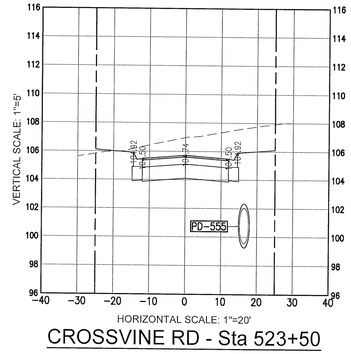

CROSSVINE RD - Sta 523+50

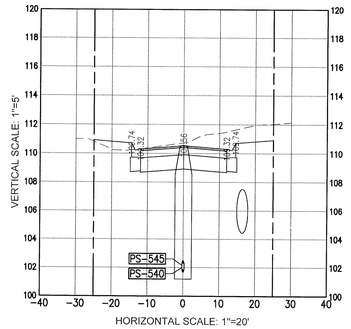

CROSSVINE RD - Sta 518+50

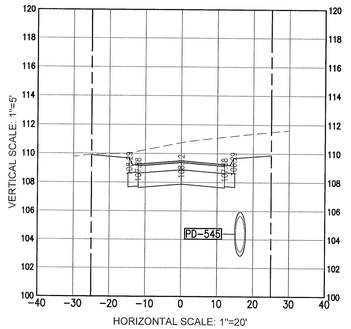

CROSSVINE RD - Sta 520+00

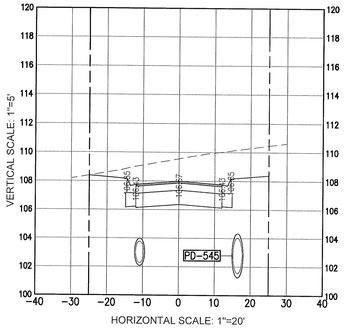

CROSSVINE RD - Sta 521+50

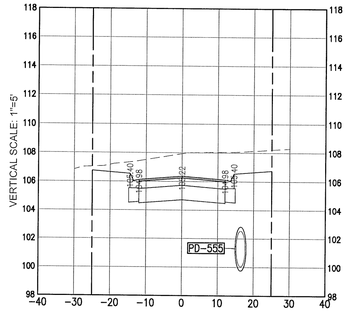

CROSSVINE RD - Sta 523+00

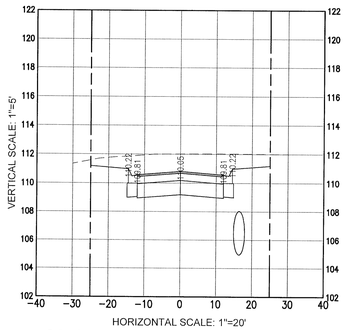

CROSSVINE RD - Sta 518+00

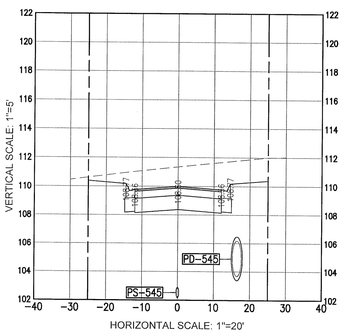

CROSSVINE RD - Sta 519+50

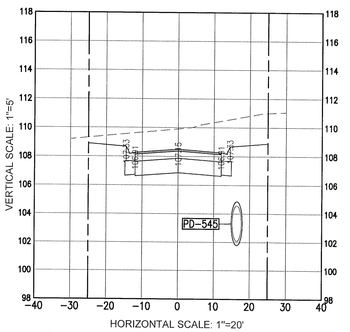

CROSSVINE RD - Sta 521+00

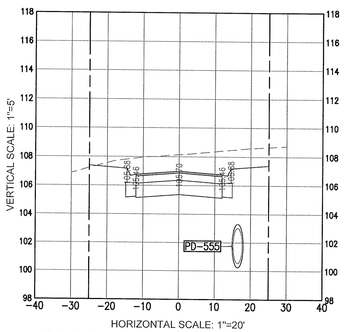

CROSSVINE RD - Sta 522+50

REBOL-BATTLE & ASSOCIATES
Civil Engineers and Surveyors
2301 N. Ninth Avenue, Suite 300
Pensacola, Florida 32503
Telephone 850.438.0400 Fax 850.438.0448
EB 00009657 LB7916

CROSS SECTIONS

BROOKHAVEN PHASE 4
A 193 LOT SUBDIVISION
PENSACOLA, FLORIDA

No.	DATE	REVISION

SEAL
NOT FOR CONSTRUCTION
PAUL A. BATTLE, P.E.
No. 53126

Dr. By:
Ck By: PAB
Job No.: 2015.035 F
Date: 6/1/2022

DRAWING No.
C7.8
SHEET 72

This drawing is the property of Rebol-Battle & Associates, and may not be reproduced without written permission.

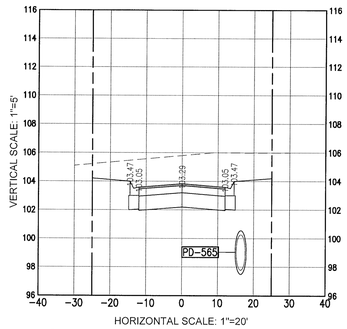

CROSSVINE RD - Sta 525+00

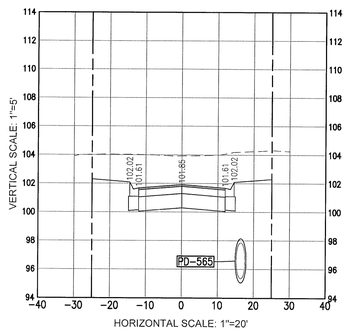

CROSSVINE RD - Sta 526+50

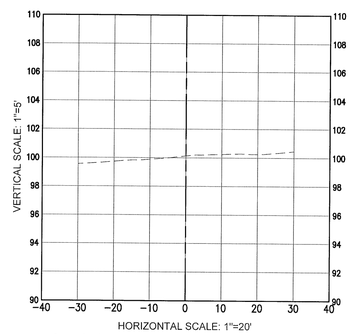

CROSSVINE RD - Sta 527+99

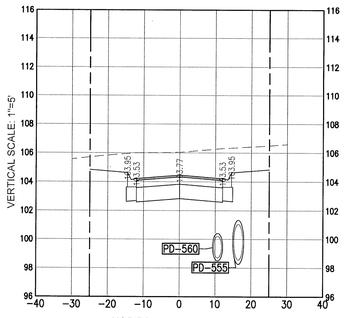

CROSSVINE RD - Sta 524+50

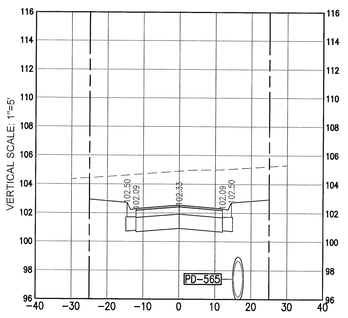

CROSSVINE RD - Sta 526+00

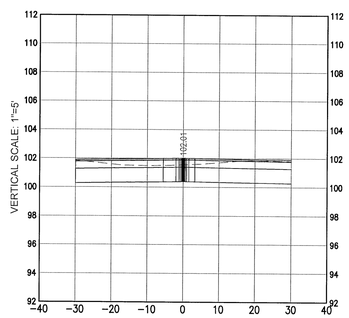

CROSSVINE RD - Sta 527+50

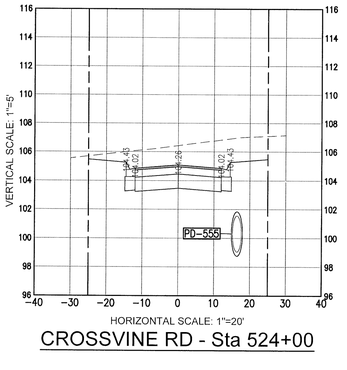

CROSSVINE RD - Sta 524+00

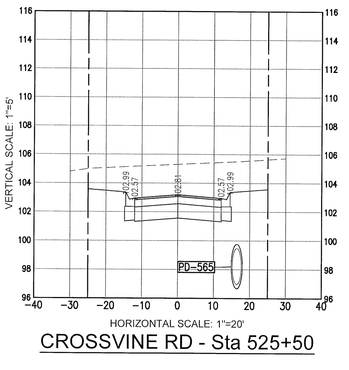

CROSSVINE RD - Sta 525+50

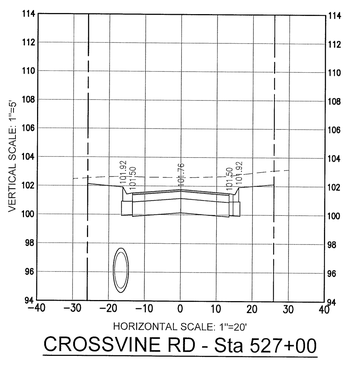

CROSSVINE RD - Sta 527+00

REBOL-BATTLE & ASSOCIATES
Civil Engineers and Surveyors
2301 N. Ninth Avenue, Suite 300
Pensacola, Florida 32503
Telephone 850.438.0400 Fax 850.438.6448
EB 0005957 LB7916

CROSS SECTIONS

BROOKHAVEN PHASE 4
A 193 LOT SUBDIVISION
PENSACOLA, FLORIDA

No.	DATE	REVISION

SEAL
NOT FOR CONSTRUCTION
PAUL A. BATTLE
LICENSED
FLORIDA
No. 53126
6/15/22
STATE OF
PAUL A. BATTLE, P.E.
No.53126

Dr. By:
Ck By: PAB
Job No.: 2015.035 F
Date: 6/1/2022

DRAWING No.
C7.9
SHEET 73

This drawing is the property of Rebol-Battle & Associates, and may not be reproduced without written permission.

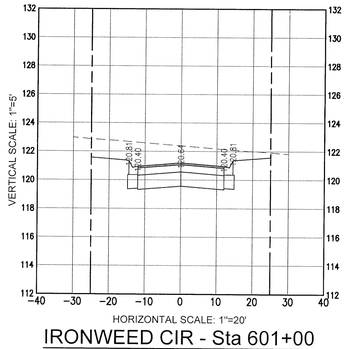

IRONWEED CIR - Sta 601+00

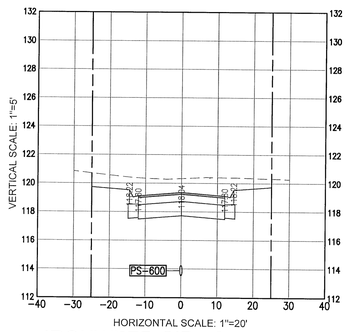

IRONWEED CIR - Sta 602+50

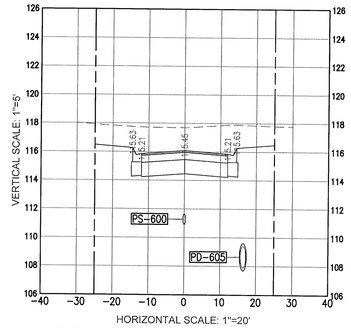

IRONWEED CIR - Sta 604+00

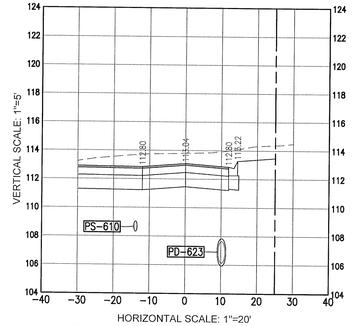

IRONWEED CIR - Sta 605+50

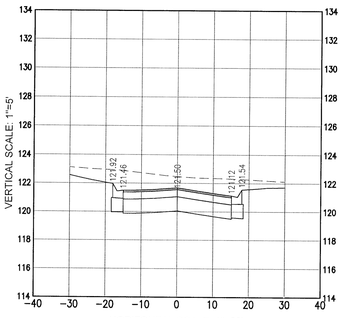

IRONWEED CIR - Sta 600+50

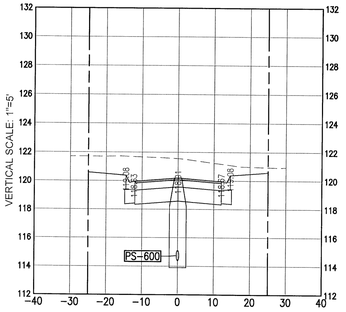

IRONWEED CIR - Sta 602+00

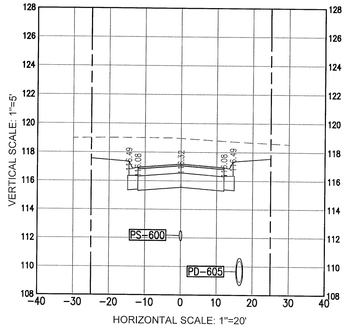

IRONWEED CIR - Sta 603+50

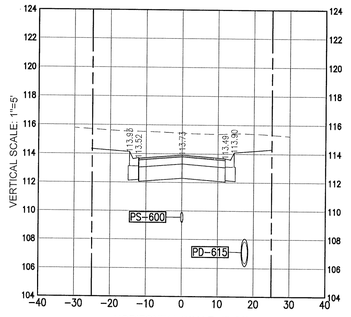

IRONWEED CIR - Sta 605+00

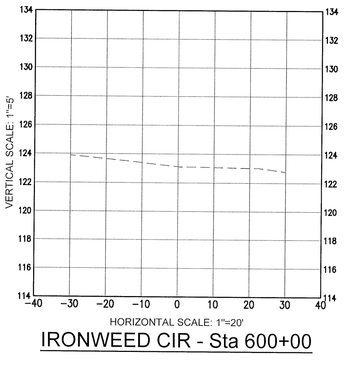

IRONWEED CIR - Sta 600+00

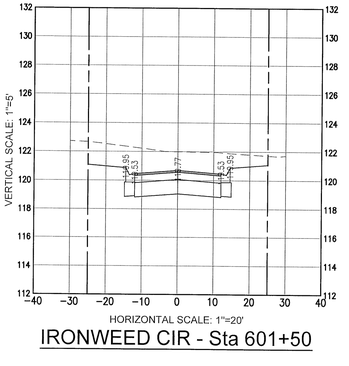

IRONWEED CIR - Sta 601+50

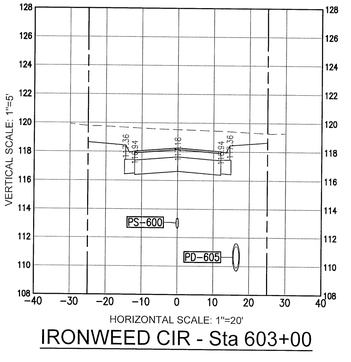

IRONWEED CIR - Sta 603+00

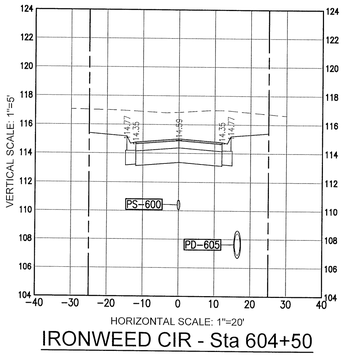

IRONWEED CIR - Sta 604+50

REBOL-BATTLE & ASSOCIATES
Civil Engineers and Surveyors
2301 N. Ninth Avenue, Suite 300
Pensacola, Florida 32503
Telephone 850.438.0400 Fax 850.438.0448
EB 00009857 LB7916

CROSS SECTIONS

BROOKHAVEN PHASE 4
A 193 LOT SUBDIVISION
PENSACOLA, FLORIDA

No.	DATE	REVISION

SEAL
NOT FOR CONSTRUCTION
PAUL A. BATTLE, P.E.
LICENSE
No 63126
6/15/22
STATE OF
FLORIDA
PAUL A. BATTLE, P.E.
No 63126

Dr. By:
Ck By: PAB
Job No.: 2015.035 F
Date: 6/1/2022

DRAWING No.
C7.10
SHEET 74

This drawing is the property of Rebol-Battle & Associates, and may not be reproduced without written permission.

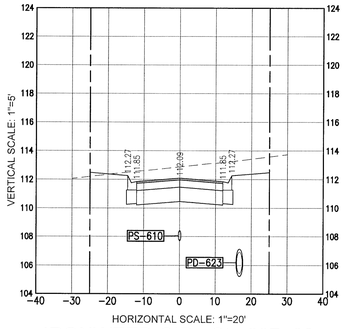

IRONWEED CIR - Sta 607+00

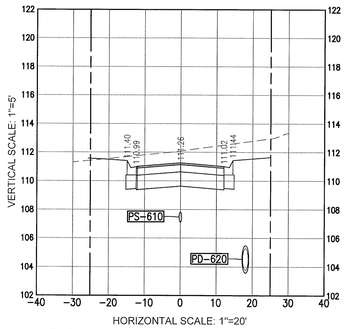

IRONWEED CIR - Sta 608+50

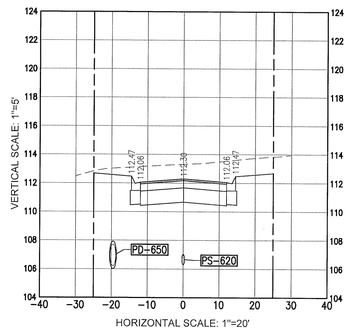

IRONWEED CIR - Sta 610+00

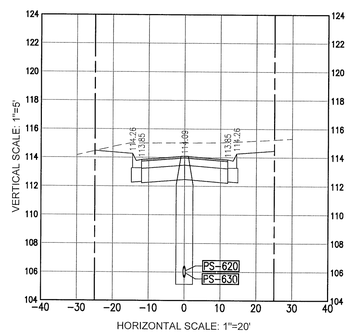

IRONWEED CIR - Sta 611+50

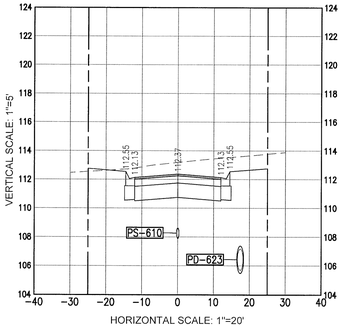

IRONWEED CIR - Sta 606+50

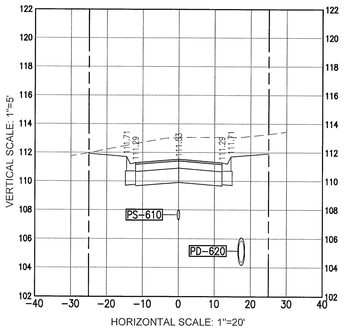

IRONWEED CIR - Sta 608+00

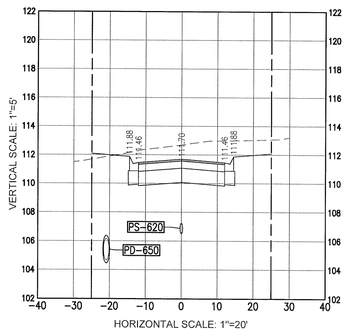

IRONWEED CIR - Sta 609+50

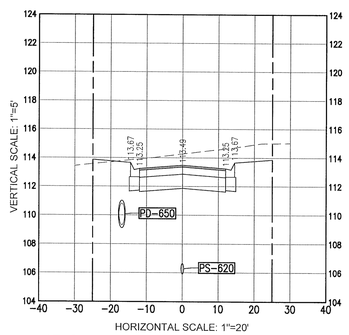

IRONWEED CIR - Sta 611+00

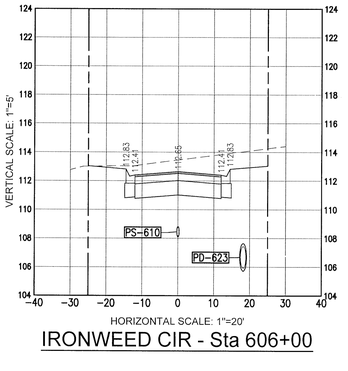

IRONWEED CIR - Sta 606+00

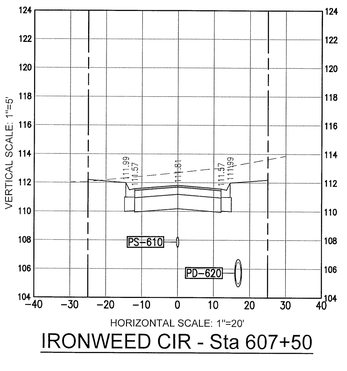

IRONWEED CIR - Sta 607+50

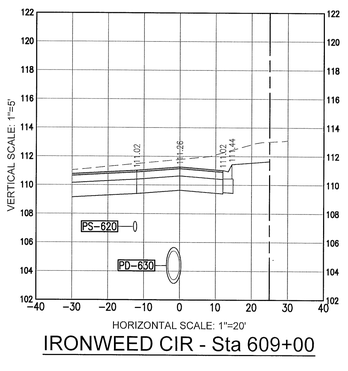

IRONWEED CIR - Sta 609+00

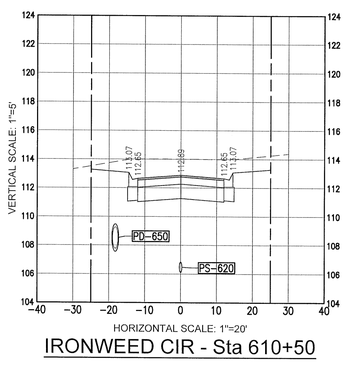

IRONWEED CIR - Sta 610+50

REBOL-BATTLE & ASSOCIATES
Civil Engineers and Surveyors
230N. Ninth Avenue, Suite 300
Pensacola, Florida 32502
Telephone 850.438.0400 Fax 850.438.0448
EB 00009657 LB7916

CROSS SECTIONS

BROOKHAVEN PHASE 4
A 193 LOT SUBDIVISION
PENSACOLA, FLORIDA

No.	DATE	REVISION

SEAL
NOT FOR CONSTRUCTION
PAUL A. BATTLE
LICENSE
No. 53126
6/15/22
STATE OF
PAUL A. BATTLE, P.E.
No.53126

Dr. By:
Ck By: PAB
Job No.: 2015.035 F
Date: 6/1/2022

DRAWING No.
C7.11
SHEET 75

This drawing is the property of Rebol-Battle & Associates, and may not be reproduced without written permission.

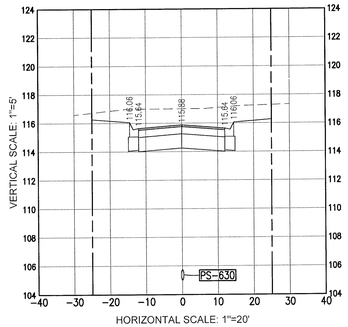

IRONWEED CIR - Sta 613+00

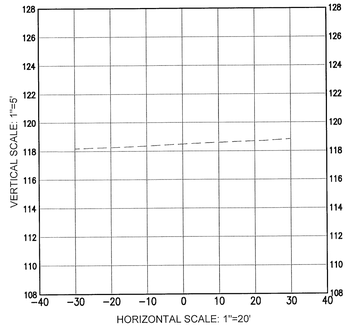

IRONWEED CIR - Sta 614+37

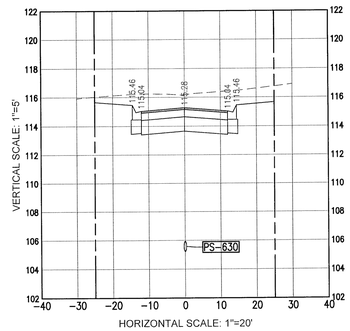

IRONWEED CIR - Sta 612+50

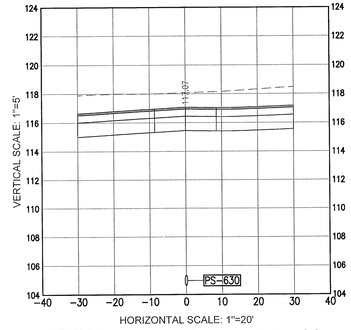

IRONWEED CIR - Sta 614+00

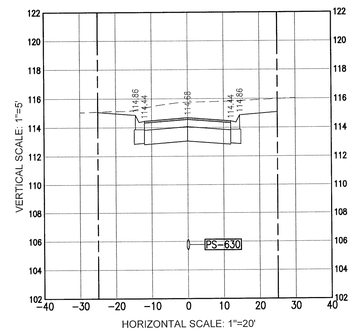

IRONWEED CIR - Sta 612+00

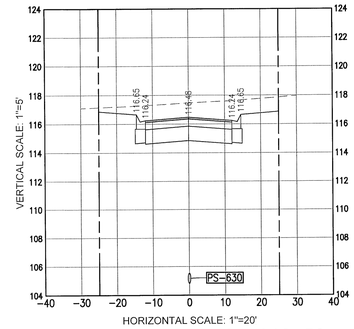

IRONWEED CIR - Sta 613+50

REBOL-BATTLE & ASSOCIATES
Civil Engineers and Surveyors
230 N. Ninth Avenue, Suite 300
Pensacola, Florida 32502
Telephone 850.438.0400 Fax 850.438.0448
EB 00009857 LB7916

CROSS SECTIONS

BROOKHAVEN PHASE 4
A 193 LOT SUBDIVISION
PENSACOLA, FLORIDA

No.	DATE	REVISION

SEAL
NOT FOR CONSTRUCTION
PAUL A. BATTLE, P.E. LICENSE No. 53126
STATE OF FLORIDA
6/15/22
PAUL A. BATTLE, P.E.
No. 53126

Dr. By:
Ck By: PAB
Job No.: 2015.035 F
Date: 6/1/2022

DRAWING No.
C7.12
SHEET 76

This drawing is the property of Rebol-Battle & Associates, and may not be reproduced without written permission.