ESCAMBIA COUNTY
FLORIDA

REQUEST FOR QUALIFICATIONS

Continuing Contract for Bridges, Docks and Boat Ramps

SPECIFICATION NUMBER PD 12-13.001

QUALIFICATIONS WILL BE RECEIVED UNTIL: 3:00 p.m. CDT, Tuesday, October 16, 2012

Office of Purchasing, Room 11.101
213 Palafox Place, Pensacola, FL 32502
Matt Langley Bell III Building
Post Office Box 1591
Pensacola, FL 32591-1591

Board of County Commissioners

Wilson Robertson, Chairman
Gene Valentino, Vice Chairman
Marie Young
Grover Robinson, IV
Kevin White

From:
Claudia Simmons, CPPO
Purchasing Manager

Procurement Assistance:
Claudia Simmons, CPPO, Manager
Office of Purchasing
2nd Floor, Matt Langley Bell, III Building
213 Palafox Place, Room 11.101
Pensacola, FL 32502
Ph: (850) 595-4987
Fax: (850) 595-4805

Technical Assistance:
Kirk Kassebaum
Engineering Department Public Works
3363 West Park Place
Pensacola, Florida
Pensacola, FL 32505
Tel: (850) 595-3431
Fax: (850) 595-3444

SPECIAL ACCOMMODATIONS:

Any person requiring special accommodations to attend or participate, pursuant to the Americans with Disabilities Act, should call the Office of Purchasing, (850) 595-4980 at least five (5) working days prior to the solicitation opening. If you are hearing or speech impaired, please contact the Office of Purchasing at (850) 595-4684 (TTY).

NOTICE

It is the specific legislative intent of the Board of County Commissioners that NO CONTRACT under this solicitation shall be formed between Escambia County and the awardee vendor until such time as the contract is executed by the last party to the transaction.

SPECIAL TERMS AND CONDITIONS

The Board of County Commissioners, Escambia County, Florida, invites your company to submit a sealed response on the item(s) as listed in this solicitation request.

All terms and conditions below are a part of this request, and no offer will be accepted unless all these conditions have been complied with. The County reserves the right to waive informalities in any offer; to reject any or all offers, in whole or in part, and/or to accept the offer(s) that in its judgment is from the lowest and most responsible and responsive offeror(s)

Instructions to Offerors

General Information

All offers to be considered shall be in the possession of the Office of Purchasing prior to the time of the solicitation closing. Offers may be mailed to 213 Palafox Place, Room 11.101, Pensacola, Florida 32502 or delivered to the Office of Purchasing, 2nd floor, Room 11.101, Matt Langley Bell, III Bldg., 213 Palafox Place, Pensacola, Florida 32502, in a sealed envelope clearly marked:

Specification Number PD 12-13.001, "Request for Qualifications for Continuing Contract for Bridges, Docks and Boat Ramps.

NOTE: If you are using a courier service; Federal Express, Airborne, UPS, etc., you must mark airbill and envelope or box with Specification Number and Project Name.

Regardless of the method of delivery, each offeror shall be responsible for his offer(s) being delivered on time as the County assumes no responsibility for same. Offers offered or received after the time set for solicitation closing will be rejected and returned unopened to the offeror(s).

The following policy will apply to all methods of source selection:

Conduct of Participants

After the issuance of any solicitation, all bidders/proposers/protestors or individuals acting on their behalf are hereby prohibited from **lobbying** as defined herein or otherwise attempting to persuade or influence any elected County officials, their agents or employees or any member of the relevant selection committee at any time during the **blackout period** as defined herein; provided, however, nothing herein shall prohibit bidders/proposers/protestors or individuals acting on their behalf from communicating with the purchasing staff concerning a pending solicitation unless otherwise provided for in the solicitation or unless otherwise directed by the purchasing manager.

Definitions

Blackout period means the period between the time the bids/proposals for invitations for bid or the request for proposal, or qualifications, or information, or requests for letters of interest, or the invitation to negotiate, as applicable, are received at the Escambia County Office of Purchasing and the time the Board awards the contract and any resulting bid protest is resolved or the solicitation is otherwise canceled.

Lobbying means the attempt to influence the thinking of elected County officials, their agents or employees or any member of the relevant Selection Committee for or against a specific cause related to a pending solicitation for goods or services, in person, by mail, by facsimile, by telephone, by electronic mail, or by any other means of communication.

Sanctions

The Board may impose any one or more of the following sanctions on a nonemployee for violations of the policy set forth herein:

(a) Rejection/disqualification of submittal
(b) Termination of contracts; or
(c) Suspension or debarment as provided in Sec. 46-102 of the Escambia County Code of Ordinances.

This policy is not intended to alter the procedure for Protested Solicitations and Awards as set forth in the Sec. 46-101 of the Escambia County Code of Ordinances.

REQUEST FOR QUALIFICATIONS

Part A Summary

Part I General Information

1-1 Purpose
1-2 Objective
1-3 Issuing Officer
1-4 Public Record
1-5 Inquiries
1-6 Schedule
1-7 Response Format
1-8 General Terms and Conditions
1-9 Exhibit A – Specifications
1-10 Agreement

Part II Information Required from Contractors

- Contact information for respondent, including name of company or entity, contact person(s), address, telephone numbers, email addresses.

- History and list of completed projects relating to bridges, docks and boat ramps within the past five (5) years.

- SWORN STATEMENT PURSUANT TO SECTION (287.133) (3)(A), FLORIDA STATUTES, ON ENTITY CRIMES.

- DRUG-FREE WORKPLACE FORM
- INFORMATION SHEET FOR TRANSACTIONS AND CONVEYANCES CORPORATE IDENTIFICATION.
- CERTIFICATE OF AUTHORITY TO DO BUSINESS FROM THE STATE OF FLORIDA
- FLORIDA DEPARTMENT OF BUSINESS AND PROFESSIONAL REGULATION – LICENSE(S), CERTIFICATION(S), AND/OR REGISTRATION(S)
- GENERAL CONTRACTOR'S LICENSE, MARINE CONTRACTOR'S LICENSE CERTIFICATE OF INSURANCE WITH INSURANCE REQUIREMENT

PART A SUMMARY

It is the intent of this contract to provide for "Miscellaneous Bridge, Dock and Boat Ramp Repairs and Construction" for projects within Escambia County, Florida per Florida Department of Transportation "Standard Specifications for Road and Bridge Construction" (current edition) and the "Escambia County Bridge, Dock and Boat Ramp Specification Guide" (current edition).

PART I GENERAL INFORMATION

1-1 PURPOSE

Escambia County Public Works Department of Engineering is seeking to enter into a continuing contract with qualified firms for the repair, maintenance and construction of Bridges, Docks and Boat Ramps for projects to be determined. The agreement PD12-13.001 will be awarded on a continuing basis to multiple firms and bids will be obtained from holders of the agreement for funded project by the Public Works Engineering Department.

1-2 OBJECTIVE

The Primary objective of the Request for Qualifications is to enter into a continuing contract with multiple qualified firms to obtain bids for the repair, maintenance and construction of Bridges, Docks and Boat Ramps as the projects are scoped and funded.

1-3 ISSUING OFFICER

The project Director shall be Charles " Randy" Oliver, County Administrator. The liaison of ficer shall be Kirk Kassebaum, Program Manager, Engineering Department, Public Works.

1-4 **Public Records** Any material submitted in response to this solicitation will become a public document pursuant to Chapter 119.07, F.S. This includes material which the responding offeror might consider to be confidential or a trade secret. Any claim of confidentiality is waived upon submission pursuant to Chapter 119.07, F.S.

1-5 INQUIRIES

Technical questions regarding this Request for Qualification shall be directed to Kirk Kassebaum, Program Director, Bridges, Engineering Department, Public Works (850) 595-3431.

1-6 SCHEDULE

The following **tentative** schedule shall be adhered to in so far as practical in all actions related to this solicitation and is subject to change.

A. Receipt of Qualifications – Tuesday, October 16, 2012

B. Review of Qualifications – October 16-22, 2012

C. Board Approval – **Tentative** November 1, 2012

1-7 RESPONSE FORMAT

One (1) CD containing the complete response in PDF format shall be sent to:

Claudia Simmons, CPPO, Manager
Office of Purchasing
213 Palafox Place, 2nd Floor, Matt Langley Bell Building
Pensacola, Florida 32502

1-8 ESCAMBIA COUNTY, FLORIDA GENERAL TERMS and CONDITIONS

NOTE: Any and all Special Terms and Conditions and specifications referenced within the solicitation which vary from these General Terms and Conditions shall have precedence. Submission of the Solicitation Offer, and Award Form and Bid/Proposal Form(s) in accordance with these General Terms and Conditions and Special Terms and Conditions constitutes an offer from the offeror. If any or all parts of the offer are accepted by Escambia County Florida, an authorized representative of the county shall affix his signature hereto, and this shall then constitute a written agreement between parties. The conditions incorporated herein become a part of the written agreement between the parties.

Solicitation Information Prospective Offerors are encouraged to utilize the Office of Purchasing Home Page for obtaining Vendor Information, Applications and Solicitation Information including Bid/Proposal Tabulations and Recommended Award, etc., Internet URL address is http://www.myescambia.com

1. **Sealed Solicitations** All solicitation forms and this form shall be executed and submitted in a sealed envelope. **(Do not include more than one solicitation per envelope.)** The face of the envelope shall contain, the address, the date and time of the solicitation opening and the solicitation number. Solicitations not submitted on attached solicitation form shall be rejected. All solicitations are subject to the conditions specified herein. Those which do not comply with these conditions are subject to rejection.

2. **Execution of Solicitation** Solicitations shall contain manual original signature of authorized representative in the space provided. Solicitation shall be typed or printed in ink. Use of erasable ink is not permitted. All corrections made by vendor to his solicitation price shall be initialed. The company name and Federal Employer Identification Number (FEIN) shall appear on each solicitation.

3. **No Offer** If not submitting an offer, respond by returning only the solicitation, offer and award form, marking it NO BID/PROPOSAL, and explain the reason in the space provided above. Failure to respond to a procurement solicitation without giving justifiable reasons for such failure, non-conformance to contract conditions, or other pertinent factors deemed reasonable and valid shall be cause for removal of the supplier's name from the solicitation mailing list. NOTE: To qualify as a respondent, offeror shall submit a ANO BID/PROPOSAL@, and it shall be received no later than the stated solicitation opening date and hour.

4. **Solicitation Opening** Shall be public and unless otherwise stated in the solicitation, immediately following the time OFFERS WILL BE RECEIVED UNTIL as stated on the solicitation, offer and award form. It is the vendor's responsibility to assure that their offer is delivered at the proper time and location stated on the solicitation. Offers which for any reason are not so delivered, will not be considered. Offers by telegram, telephone or fax are not acceptable. Offers may not be altered after the time specified as AOFFERS WILL BE RECEIVED UNTIL@ has passed. Note: Solicitation files may be examined during normal working hours in accordance with Chapter 119, Florida Statutes (F.S.), Public Records. Bid/Proposal Tabulations may be viewed on the Office of Purchasing Public Notice Bulletin Board or Home Page (see **Solicitation Information**).

5. **Prices, Terms and Payment** Firm prices shall be provided and include all packing, handling, shipping charges and delivery to any point within Escambia County, Florida.

5.01 **Taxes** Escambia County does not pay Federal Excise and Sales taxes on direct purchases of tangible personal property. See exemption number on face of purchase order. This exemption does not apply to purchases of tangible personal property made by contractors who use the tangible personal property in the performance of contracts for the improvement of county owned real property.

5.02 **Discounts** Discounts for prompt payments shall not be considered in determining the lowest net cost for solicitation evaluation purposes except in cases of tie solicitations.

5.03 **Mistakes** Vendors are expected to examine the specifications, delivery schedule, solicitation prices, extensions and all instructions pertaining to supplies and services. Failure to do so will be at vendor's risk. In case of mistake in extension the unit price will govern.

5.04 **Condition and Packaging** It is understood and agreed that any item offered or shipped as a result of this solicitation shall be a new, current standard production model available at the time of the solicitation. All containers shall be suitable for storage or shipment, and all prices shall include standard commercial packaging.

5.05 **Safety Standards** Unless otherwise stipulated in the solicitation, all manufactured items and fabricated assemblies shall comply with applicable requirements of occupational Safety and Health Act and any standards there under.

5.06 **Invoicing and Payment** The contractor shall be paid upon submission of properly certified invoices to the purchaser at the prices stipulated on the contract at the time the order is placed, after delivery and acceptance of goods, less deductions if any, as provided. Invoices shall contain the contract number, purchase order number and the contractor's Federal Employer Identification Number. An original and one (1) copy of the invoice shall be submitted. Failure to follow these instructions may result in delay in processing invoices for payment.

INTEREST PENALTIES: Payment shall be made in accordance with Chapter 218.74, F. S. Florida Prompt Payment Act.

5.07 **Annual Appropriations** Escambia County's performance and obligation to pay under this contract is contingent upon an annual appropriation by the Board of County Commissioners.

6. **Additional Terms and Conditions** No additional terms and conditions included with the solicitation response shall be evaluated or considered and any and all such additional terms and conditions shall have no force and effect and are inapplicable to this solicitation. If submitted either purposely through intent or design or inadvertently appearing separately in transmittal letters, specifications, literature, price lists or warranties, it is understood and agreed the general and special conditions in this solicitation are the only conditions applicable to this solicitation and the vendor's authorized signature affixed to the Solicitation, Offer and Award Form attests to this.

7. **Manufacturers Name and Approved Equivalents** Any Manufacturers' names, trade names, brand names, information and/or catalog numbers listed in a specification are for information and not intended to limit competition. The vendor may offer any brand for which he is an authorized representative, which meets or exceeds the specifications for any item(s). MEASUREMENTS: Customary measurements appearing in these specifications are not intended to preclude solicitations for commodities with metric measurements. If solicitations are based on equivalent products, indicate on the solicitation form the manufacturer's name and number. Vendor shall submit with his

solicitation, cuts, sketches, and descriptive literature and/or complete specifications. Reference to literature submitted with a previous solicitation will not satisfy this provision. Escambia County reserves the right to determine acceptance of item(s) as an approved equivalent. Solicitations which do not comply with these requirements are subject to rejection. Solicitations lacking any written indication of intent to provide an alternate brand will be received and considered in complete compliance with the specifications as listed on the solicitation form. The Office of Purchasing is to be notified of any proposed changes in (a) materials used, (b) manufacturing process, or (c) construction. However, changes shall not be binding upon the County unless evidenced by a Change Notice issued and signed by the Purchasing Chief.

8. **Interpretations/Disputes** Any questions concerning conditions and specifications, including, but not limited to, protests of the terms, specifications and conditions of the Solicitation, shall be directed in writing to this office for receipt no later than five (5) days prior to the solicitation opening. Inquiries shall reference the date of solicitation opening and solicitation number. No interpretations shall be considered binding, unless provided in writing by Escambia County in response to requests in full compliance with this provision.

9. **Conflict of Interest** The award hereunder is subject to all of the provisions of Chapter 112, F.S.

9.01 County Procedure on an Acceptance of Gifts
Chapter 112.313 of the Florida Statutes states:

"No public officer, employee of an agency, local government attorney, or candidate for nomination or election shall solicit or accept anything of value to the recipient, including a gift, loan, reward, promise of future employment, favor or service based upon any understanding that the vote, official action, or judgment of the public officer, employee, local government attorney or candidate would be influenced thereby."

During the holiday season, employees and departments need to use common sense and also not offend the gift giver by appearing ungrateful or ungracious. The general rule would be as follows:

> If the gift is a consumable under $100; is meant for the group or department; and the group or department believes that the gift will not influence their dealings with the giver, then it would be proper to receive the gift. The group or department should thank the giver for their generosity in writing.

Gifts given to individual employees should be discouraged and returned to the giver with a thank you note especially if it is a monetary gift or certificate. Under no circumstances should an employee keep a monetary gift, including a gift certificate.

9.02 Contractors are required to disclose to the Purchasing Chief or his designee any gifts or favors offered or requested or other such questionable behavior by employees as promptly as it shall come to their knowledge.

9.03 The right of the Contractor to proceed may be terminated by written notice if, after notice and hearing, the Purchasing Chief or designee determines that the Contractor, its agent or another representative--

- Offered or gave a gratuity (e.g., an entertainment or gift) to an officer, official, or employee of the County, and
- Intended, by the gratuity, to obtain a contract or favorable treatment under a contract.

If the resultant contract is terminated under this clause, the County is entitled to pursue the same remedies as in a breach of the contract.

The rights and remedies of the County provided in this clause shall not be exclusive and are in addition to any other rights and remedies provided by law or under the contract.

10. **Awards** As the best interest of the County may require, the right is reserved to make award(s) by individual item, group of items, all or none, or a combination thereof; with one or more suppliers; to reject any and all offers or waive any minor irregularity or technicality in offers received. When it is determined there is competition to the lowest responsible and responsive offeror, evaluation of other offers is not required. All awards made as a result of this solicitation shall conform to applicable Florida Statutes and County Ordinances.

11. **Nonconformance to Contract Conditions** Items may be tested for compliance with specifications by a testing laboratory acceptable to the County. The County may require the vendor to reimburse them for costs incurred by the County in connection with the examination or testing of the commodity, including costs relating to transporting the commodity samples to the testing site, actual test costs, personnel costs and other applicable costs should the items fail testing. The data derived from any tests for compliance with specifications are public records and open to examination thereto in accordance with Chapter 119, F.S. Items delivered not conforming to specifications may be rejected and returned at vendor's expense. These items and items not delivered as per delivery date in solicitation and/or purchase order may result in offeror being found in default in which event any and all reprocurement costs may be charged against the defaulting contractor. Any violation of these stipulations may also result in:

11.01 Vendors name being removed from the Office of Purchasing vendor mailing list.

11.02 The County not doing business with the Vendor until such time as the County has been reimbursed for all reprocurement costs.

12. **Inspection, Acceptance and Title** Inspection and acceptance will be at destination unless otherwise provided. Title and risk of loss or damage to all items shall be the responsibility of the contract supplier until accepted by the County, unless loss or damage results from negligence by the County. The contract supplier shall be responsible for filing, processing, and collecting all damage claims. However, to assist him in the expeditions handling of damaged claims, the County will:

12.01 Record any evidence of visible damage on all copies of the delivering carrier's Bill of Lading.

12.02 Report damage (Visible and Concealed) to the carrier and contract suppler, confirming such reports, in writing, within 15 days of delivery, requesting that the carrier inspect the damaged merchandise.

12.03 Retain the item and its shipping container, including inner packing material until inspection is performed by the carrier, and disposition given by the contract supplier.

12.04 Provide the contract supplier with a copy of the carrier's Bill of Lading and damage

inspection report.

13. **Governmental Restrictions** In the event any governmental restrictions may be imposed which would necessitate alteration of the material, quality, workmanship or performance of the items offered on this solicitation prior to their delivery, it shall be the responsibility of the supplier to notify the Office of Purchasing at once, indicating in his letter the specific regulation which required an alteration. The County reserves the right to accept any such alteration, including any price adjustments occasioned thereby, or to cancel the contract at no further expense to the County.

14. **Legal Requirements** Applicable provisions of all Federal, State, County and local laws, and of all ordinances, rules, and regulations shall govern development, submittal and evaluation of all offers received in response hereto and shall govern any and all claims and disputes which may arise between person(s) submitting an offer response hereto and Escambia County by and through its officers, employees and authorized representatives, or any other person, natural or otherwise; and lack of knowledge by any offeror shall not constitute a cognizable defense against the legal effect thereof.

15. **Patents and Royalties** The offeror, without exception, shall indemnify and save harmless the purchaser and its employees from liability of any nature or kind, including cost and expenses for or on account of any copyrighted, patented, or unpatented invention, process, or article manufactured or supplied by the offeror. The offeror has no liability when such claim is solely and exclusively due to the combination, operation or use of any article supplied hereunder with equipment or data not supplied by contractor or is based solely and exclusively upon the County=s alteration of the article. The purchaser will provide prompt written notification of a claim of copyright or patent infringement and will afford the offeror full opportunity to defend the action and control the defense.

    Further, if such a claim is made or is pending, the contractor may, at its options and expenses, procure for the purchaser the right to continue use of, replace or modify the article to render it non-infringing. (If none of the alternatives are reasonably available, the County agrees to return the article on request to the contractor and receive reimbursement, if any, as may be determined by a court of competent jurisdiction.) If the offeror uses any design, device, or materials covered by letters, patent or copyright, it is mutually agreed and understood without exception that the offered prices shall include all royalties or cost arising from the use of such design, device, or materials in any way involved in the work.

16. **Price Adjustments** Any price decrease effectuated during the contract period by reason of market change shall be passed on to the County. This shall also apply to all in-place equipment on rent or lease plan. Price increases are not acceptable.

17. **Cancellation** All contract obligations shall prevail for at least one hundred eighty (180) days after effective date of the contract. Also, cancellation may be required in accordance with Chapter 287.042(2)(b) and (c), F.S. For the protection of both parties, this contract may be canceled in whole or in part by either party by giving thirty (30) days prior notice in writing to the other party.

18. **Abnormal Quantities** Should any unusual or abnormal quantity requirements arise, the County reserves the right to solicit separate offers thereon.

19. **Advertising** In submitting an offer, offeror agrees not to use the results therefrom as a part of any commercial advertising.

20. **Assignment** Any Purchase Order issued pursuant to this solicitation and the monies which may

become due hereunder are not assignable except with the prior written approval of the County.

21. **Liability** The supplier shall hold and save Escambia County, its officers, agents and employees harmless against claims by third parties resulting from the supplier's breach of this contract or the supplier's negligence.

22. **Facilities** The County reserves the right to inspect the offeror=s facilities at any reasonable time with prior notice.

23. **Distribution of Certification of Contract** One (1) copy of the Certification of Contract shall be furnished to each contractor as a result of this solicitation. It shall be the contractor's responsibility to reproduce and distribute copies of this certification to all distributors listed in this solicitation who will accept orders and complete deliveries. No additions, deletions or changes of any kind shall be made to this certification by the contractor without prior approval of the Office of Purchasing.

24. **The Successful Offeror(s) shall Provide** A copy of any product literature and price list, in excellent condition at time of offer.

25. **Addition/Deletion of Items** The Office of Purchasing reserves the right to add to or delete any item from this solicitation or resulting contract when deemed to be in the County=s best interest.

26. **Ordering Instructions** Manufacturers are encouraged to offer direct or through distributors who will accept orders and complete deliveries. Offeror shall include complete and detailed ordering instructions, including FEIN for invoicing distributors, with the offer on the form provided.

27. **Public Records** Any material submitted in response to this solicitation will become a public document pursuant to Chapter 119.07, F.S. This includes material which the responding offeror might consider to be confidential or a trade secret. Any claim of confidentiality is waived upon submission pursuant to Chapter 119.07, F.S.

28. **Delivery** Delivery shall be Monday through Friday, 8:00 a.m. to 11:30 a.m. and 1:00 p.m. to 4:00 p.m., excluding County Holidays, unless otherwise specified. Unless actual date is specified, show number of days required to make delivery after receipt of purchase order in space provided. The County may utilize Delivery time for the basis of award.

29. **Samples** Samples of items, when called for, shall be furnished at no expense to the County. If not destroyed in evaluation process and upon written request, shall be returned at the offeror's expense. Each sample provided, shall be labeled with offeror's name, manufacturer's brand name and serial number (as appropriate), solicitation number and item reference. Request for return of samples shall be accompanied by instructions which include shipping authorization and name of carrier, shall be received within 10 days after solicitation opening date. If instructions are not received, items become the sole property of the County and may be disposed of at the discretion of the County.

30. **Additional Quantities** For a period not exceeding one hundred eighty (180) days from the date of acceptance of this offer by the buyer, the right is reserved to acquire additional quantities at the prices offered in this solicitation. If additional quantities are not acceptable, the Bid/Proposal Form shall be annotated "OFFER IS FOR SPECIFIED QUANTITY ONLY".

31. **Service and Warranty** Unless otherwise specified, the offeror shall define any warranty service and replacements that will be provided at no cost to the County during and subsequent to this contract.

Offerors shall explain on an attached sheet to what extent warranty and service facilities are provided.

32. **Default** Failure to perform according to this solicitation and/or resulting contract may be cause for Default and any and all reprocurement costs may be charged against the awarded vendor. Any violations of these stipulations may also result in:

32.01 Vendors name being removed from the Office of Purchasing vendor mailing list.

32.02 The County not doing business with the Vendor prior to reinstatement to the Office of Purchasing vendor mailing list in accordance with the County Purchasing Ordinance .

33. **Equal Employment Opportunity** In connection with the carrying out of any project, the contractor shall not discriminate against any employee or applicant for employment because of race, color, religion, sex, national origin, age, or physical handicap.

34. **Florida Preference** Chapter 287.084, F.S. Preference to Florida businesses, When the lowest most responsible and most responsive offer is by a offeror whose place of business from where he offers is in a state which grants a preference for the purchase of personal property to a person whose place of business is in such state, then the preference may be given to the lowest most responsible and most responsive offeror having a place of business within this state, which preference is equal to the preference granted by the state or political subdivision thereof in which the lowest most responsible and most responsive offeror has his place of business. However, this section shall not apply to projects for which federal aid funds are available. This section may be waived by the Board of County Commissioners. **All solicitations shall require any offeror whose place of business is outside the State of Florida to accompany any written bid/proposal form with a written opinion of an attorney at law licensed to practice law in that foreign state, as to the preferences, if any or none, granted by the law of that state to its business entities whose places of business are in that foreign state in the letting of any or all public contracts.** The failure of any such offeror to accompany its bid/proposal forms with such a written opinion may result in the rejection of the offer submitted by such offeror.

35. **Contractor Personnel** The County shall, throughout the life of the contract, have the right of reasonable rejection and approval of staff or subcontractors assigned to the work by the contractor. If the County reasonably rejects staff or subcontractors, the contractor shall provide replacement staff or subcontractors satisfactory to the County in a timely manner and at no additional cost to the County. The day-to-day supervision and control of the contractor=s employees and subcontractors is the responsibility solely of the contractor.

The names and address of the proposed subcontractors to be utilized in this project are to be listed on the contractor's bid/proposal form.

Contractors who are suspended or debarred are restricted from subcontracting.

36. **Award** The County reserves the right to accept or reject any and all offers and to make award to the lowest most responsive and most responsible offeror(s) whose offer meets the requirements and criteria set forth in the solicitation and whose award will, in the opinion of the County, be in the best interest of and most advantageous to the County. The Board of County Commissioners reserves the authority to accept or reject any award relating to this solicitation.

Factors to be considered in determining whether the standard of responsibility has been met shall include but not limited to:

36.01 Vendor shall have available appropriate financial, material, equipment, facility, and personnel resources, experience, knowledge and expertise, or the ability to obtain them, necessary to indicate its capability to meet all contractual requirement;

36.02 Vendor shall have a satisfactory record of performance;

36.03 Vendor shall have a satisfactory record of integrity;

36.04 Vendor shall have qualified legally to contract with the County; and

36.05 Vendor shall have supplied all necessary information in connection with the inquiry concerning responsibility including but not limited to any licenses, permits, insurance or organization papers required.

The prospective contractor/vendor shall supply information requested by the County concerning the responsibility of such contractor/vendor. If such contractor/vendor fails to supply the requested information, the County shall base the determination of responsibility upon any available information or may find the prospective contractor/vendor non-responsible if such information is not submitted within the time specified by the County.
Award(s) resulting from this solicitation shall be subject to the provisions of Procedure PP-250, Vendor Performance Evaluations of the Purchasing Policies and Procedures of Escambia County.

37. **Uniform Commercial Code** Chapter 672, F. S. The Uniform Commercial Code shall prevail as the basis for contractual obligations between the awarded vendor/contractor and Escambia County for any terms and conditions not specifically stated in this solicitation.

38. **Contractual Agreement** This solicitation shall be included and incorporated in the final contract or purchase order. The order of contract precedence will be the contract (purchase order), solicitation document and response. Any and all legal action necessary to enforce the contract will be held in Escambia County and the contract will be interpreted according to the laws of Florida.

39. **Payment Terms/Discounts** The County's payment terms are net thirty (30) days. Cash discounts for prompt payment will not be considered in determining the lowest net cost for offer evaluation purposes except in cases of tie offers.

40. **Improper Invoice; Resolution of Disputes** In any case, in which an improper **original** invoice is submitted by a vendor, the County shall, within 10 days after the improper **original** invoice received by it, notify the vendor that the **original** invoice is improper and indicate what corrective action on the part of the vendor is needed to make the **original** invoice proper.

In the event a dispute occurs between a vendor and the County concerning payment of an **original** invoice, such disagreement shall be finally determined by the County as provided in Chapter 218.76, F.S.. The County will commence its dispute resolution no later than forty-five (45) days after the date on which the proper **original** invoice was received by the County, and shall be concluded by final decision of the County not later than 60 days after the date on which the proper **original** invoice was received by the County. The dispute resolution shall not be subject to an administrative proceeding, pursuant to Chapter 120, F.S. and shall not constitute an administrative proceeding which prohibits a court from deciding any action arising out of the dispute. If the dispute is resolved in

favor of the County, then interest charges shall begin to accrue 15 days after the County=s final decision. If the dispute is resolved in favor of the vendor, then interest shall begin to accrue as of the original date the payment became due.

41. **Public Entity Crimes** A person or affiliate who has been placed on the convicted vendor list following a conviction for a public entity crime may not submit an offer on a contract to provide any goods or services to a public entity, may not submit an offer on a contract with a public entity for the construction or repair of a public building or public work, may not submit offers on leases of real property to a public entity, may not be awarded or perform work as a contractor, supplier, subcontractor, or consultant under a contract with any public entity, and may not transact business with any public entity in excess of the threshold amount provided in Chapter 287.017, F.S. for **Category Two** for a period of 36 months from the date of being placed on the convicted vendor list. The Sworn Statement Pursuant to Section 287.133 (3)(a) Florida Statutes, on Entity Crimes should be completed and submitted with Offer. Information as provided may be verified through the State of Florida

42. **Suspended and Debarred Vendors** Offers shall be received from only those contractors which are presently in good standing on the County's vendor list.
By submitting an offer, the offeror certifies that it is not currently suspended or debarred from submitting offers for contracts issued by any political subdivision or agency of the State of Florida or the Federal Government; and that it is not an agent of a person or entity that is currently suspended or debarred from submitting offers for contracts issued by any political subdivision or agency of the State of Florida, or the Federal Government.

43. **Drug-Free Workplace** Chapter 287.087, F.S., Procurement of Personal Property and Services. Whenever two or more offers which are equal with respect to price, quality, and service are received by the County for the purchase of commodities or contractual services, an offer received from a business that certifies that it complies fully with the requirements of the Drug-Free Workplace Program shall be given preference in the award process.

44. **Information Sheet for Transactions and Conveyances** The Information Sheet for Transactions and Conveyances Corporation Identification, should be completed and submitted with offer. Information as provided may be verified through the Department of State.

45. **Copies** Copies of documents, records, materials, and/or reproductions shall be requested in accordance with Chapter 119, F.S., Public Records. Copyrighted materials may be inspected, but cannot be copied or reproduced per federal law.

46. **License and Certifications** Pursuant to Florida Statutes 205.042, 212.15(2), 212.19, 489, 607.0403, 607.1501, 607.1502 and Escambia County Code of Ordinances, Article III, Sec. 90-91 through 90-95:

The offeror shall have, prior to making this offer, met the license, certification, and any other requirements of the state, county, city and/or other agency of authority with jurisdiction in such matters and should provide copies of documentation which evidence such qualifications with your response to this solicitation; and, that the offeror shall provide follow-up evidence that the contractor maintains such credentials throughout the period of the agreement.

A copy of a current certificate of authority from the Secretary of State authorizing your company to do business in the State of Florida; or other evidence of legal authority to do business in the state, county, city and/or any other agency of authority should be provided with your response to

this solicitation; however, the County may allow this responsiveness issue to be cured after submission of your offer within a reasonable period of time and prior to any recommendation for award. Information concerning certification with the Secretary of State can be obtained at http://ccfcorp.dos.state.fl.us/index.html.

Failure to provide evidence of current licensure, certification or other evidence of legal authority to do business in the matters of this solicitation may render your offer non-responsive.

47. Execution of Contract

47.01 Subsequent to the date of award by the Board of County Commissioners, at which time the principal and County have reached a mutual agreement, and within ten (10) days after the prescribed forms of contract documents are presented for signature, the successful offeror shall execute and deliver to the owner a contract on the forms described within the offer documents in such number of counterparts as the owner may require.

47.02 Having satisfied all conditions of award as set forth elsewhere in these documents, the successful offeror shall within the period specified above, furnish bond or bonds in a sum of at least the full amount of the contract as awarded, on the forms provided by the County, which secures the faithful performance of the contract, and for the payment of all persons, firms or corporations to whom the contractor may become indebted for all labor, materials, tools, equipment or services, of any nature, employed or used by him in performing the work. Such bond(s) shall bear the same date as or a date subsequent to, the date of the contract. The date of the contract shall be the date of award by the Board of County Commissioners at which time the principal and county have reached a mutual agreement for projects thereto.

47.03 On each bond the rate of premium shall be stated, together with the total amount of the premium charged. The current Power of Attorney for the person who signs for any surety company shall be attached to such bond.

47.04 Separate performance and payment bonds equal to 100% of the contract amount shall be furnished at the time of signing the formal agreement.

Performance and payment bonds shall be reviewed by the Office of Purchasing to assure compliance, then recorded in the Clerk of the Circuit Court Recording Office, 1st Floor, 223 Palafox Place, Pensacola, Florida by and at the expense of the contractor. The cost of recording is $10.00 for the first page and $8.50 for each additional page.

The Clerk of the Circuit Court Recording Office will provide an official receipt of the transaction to the contractor; and the contractor shall request that after all recording procedures are done that the completed original bond documents be sent to the Office of Purchasing.

Revised 6/04

The contractor shall present an original copy of the official recording receipt to the Office of Purchasing as evidence of having posted the required bonds.

47.05 The failure of the successful offeror to execute such contract and to supply the required bonds within such extended period as the county may grant based upon reasons determined

adequate by the county, shall constitute a default, and the county may either award the contract to the next responsible offeror or re-advertise for offers, and may charge against the offeror the difference between the amount of the offer and the amount for which a contract for work is subsequently executed, irrespective of whether the amount thus due exceeds the amount of the bid surety.

48. **Purchase Order** After the award of the contract or the decision to award an order, a purchase order for the goods or services listed in the Solicitation will be enclosed with the resulting contract
or will be issued shortly thereafter and will be come an integral part of the resulting contract. The purchase order indicates that sufficient funds have been obligated and assures distribution of necessary receiving reports.

The purchase order does not supersede any provisions of the standard form of agreement. Performance time and dates are determined solely by the contract and any modifications.

Services/supplies are not to begin until receipt of the purchase order or other notification by the Office of Purchasing.

Construction services are not to begin until receipt of the Notice to Proceed from the Contract Administrator.

49. **No Contingent Fees** The offeror warrants that it has not employed or retained any company or person, other than a bona fide employee working solely for the offeror to solicit and that it has not paid
or agreed to pay any person, company, corporation, individual, or firm, other than a bona fide employee working solely for the offeror any fee, commission, percentage, gift, or other consideration contingent upon or resulting from the award or making of an agreement. For the breach or violation of
this provision, the County shall have the right to terminate any resultant agreement without liability and at its discretion, to deduct from the contract price, or otherwise recover the full amount of such fee,
commission, percentage, gift, or consideration.

50. **Solicitation Expenses** The County accepts no responsibility for any expenses incurred by the offeror in the solicitation preparation and submittal as well as any other requirements as may be specified in the solicitation. All such expenses are borne solely by the offeror.

51. **On-Line Auction Services** Any internet auction sale shall be governed pursuant to Section 46-134 of the Code of Ordinances and Section 125.35 Florida Statutes. In the event of a conflict between the terms and conditions of the auction site and the county procurement code or state law then the county's procurement code or state law shall prevail in all circumstances.

(Revised 3/1/06)

1-9 EXHIBIT A – SPECIFICATIONS

PUBLIC WORKS DEPARTMENT

ENGINEERING DIVISION

Bridge, Dock and Boat Ramp

Specification Guide

County Engineer
Joy D. Blackmon, P.E.

Revision 2
Effective Date: 11/01/12

Table of Contents

Section	Description	Page
i	General Information	2
00001	General Performance	4
00010	Mobilization, Small Equipment	4
00020	Mobilization, Medium Equipment	4
00030	Mobilization, Heavy Equipment	5
00040	Mobilization, Barge Work	5
00050	Inspection Transportation & Access	5
00110	Joint Maintenance	6
00120	Joint Replacement	7
00210	Timber Decks	9
00220	Concrete Deck & Approach Slab Sealing	10
00230	Concrete Deck & Approach Slab Patching	11
00240	Bridge Deck Drainage	15
00310	Asphalt Patching & Removing	16
00320	Asphalt Milling	17
00330	New Deck Overlay	17
00410	Traffic Signage Section	18
00420	Temporary Markings	18
00430	Thermoplastic Markings	18
00440	Work Zone Safety & Control	19
00510	Upgrade Handrail	21
00520	Upgrade Approach Guardrail	21
00530	Retrofit Bridge Guardrail	23
00540	Metal Guardrail Miscellaneous Repair	23
00610	Superstructure Cleaning & Painting	24
00620	Bearing Maintenance & Repair	25
00630	Concrete Beam & Girder Repair	27
00640	Steel Beam Repair & Replacement	29
00650	Timber Stringer Repair & Replacement	30
00710	Concrete Substructure Maintenance & Repair	33
00720	Steel Substructure Maintenance & Repair	39
00730	Timber Substructure Maintenance & Repair	42
00810	Abutment & Wing Wall Repair	50
00820	Approach Repair	55
00910	Erosion Control	57
00920	Channel Repair	58
00930	Culvert Repair	59
00940	Fender System Repair	62
00950	Concrete Boat Ramp	62
00960	Vinyl Sheet Pile Seawall	63
00970	Timber Pier	64
00980	Pervious Concrete Pavement	65
Appendix A	Supplemental Details	A.1

Section i. – General Information

The purpose of the Escambia County Bridge Repair Specification Guide is to provide supplemental information or details required to determine the maintenance, repair, or replacement cost for each of the items listed in the Bridge Maintenance and Repair Pricing Agreement. This guide references the specifications and details that are to be followed in the performance of bridge repairs. It also contains quantities and other information necessary to ensure that costs from each bidder are based on the same items. The following documents, provide the referenced specifications, directions, and details:

1. FDOT Bridge Maintenance & Repair Handbook, Version 1 (FDOT Maintenance Handbook) http:/ / www.dot.state.fl.us/ statemaintenanceoffice/ CBR/ BridgeInformation.shtm
2. FDOT Standard Specifications for Road and Bridge Construction, Current Edition (FDOT Specifications) http:/ / www.dot.state.fl.us/ specificationsoffice/ Implemented/ SpecBooks/ 2010BK.shtm
3. Escambia County General Paving and Drainage Technical Specifications, 2011 (County Paving Specifications) http:/ / co.escambia.fl.us/ Bureaus/ PublicWorks/ Engineering.html
4. Escambia County Standard Construction Contract Documents PD 06-07.80 for Miscellaneous Bridge Repair, Form B: County (Standard Contract)

Estimates for costs shall include all items necessary to completely repair or construct each item including any desired contingency and administrative costs. Sections for which a bid is not being submitted shall be labeled as "No Bid" in the Unit Price for that section. Escambia County will use the Pricing Agreement to compare costs for individual repair projects in order to select the lowest bidder. The total cost and contract price will be established by entering the quantity for each item and summing the extending costs. The selected Contractor will have the opportunity to decline the project, but revising item costs will not be allowed. **Contractors that have not entered bids for all items comprising a repair project will not be selected for that project.**

A **Balance of Line (BOL)** section is located at the bottom of the bid tab to allow pricing of non-standard items which may be needed for a project. If a BOL Item is required, a description of the item will be sent to all responsive Contractors to obtain a bid quote for the item. A Contractor will be considered responsive on a project if they have entered bids for all items comprising the project other than the BOL item(s). The bid quote for the BOL item will be added to the pricing agreement bid tab to obtain the total bid price for each responsive Contractor. The total sum of BOL items cannot exceed 25% of the total cost of the project.

Include all costs for disposal of existing materials that are replaced unless the section notes specifically state that disposal costs are not to be included. Also include costs for disposal of environmentally sensitive waste products such as used water, which are required to perform the required maintenance or repair procedure. These items shall be removed from County property and disposed of in a legal manner.

The Contractor shall procure and maintain insurance as described in the Standard Contract. Insurance costs shall be included within the individual item costs.

It shall be the Contractor's responsibility to identify any items which cannot be priced based on the information provided and bring it to the attention of Escambia County for a possible addendum.

Bidding Contractors must have an Escambia County Business License, a General or Marine Specialty State Contractor License, and appropriate Federal or State Certifications.

Contract time to perform the work described by each project shall be negotiated prior to award of the contract.

All work, unless otherwise indicated, shall conform to the FDOT Standard Specifications for Road and Bridge Construction (latest edition) with the following exceptions:

1. Division I General Requirements & Covenants shall be excluded and not applicable to any specification referenced.
2. Methods of payment and Pay Item Numbers are not applicable.
3. FDOT Submittal requirements are not applicable.
4. Testing requirements that exceed the requirements of the County are not applicable.
5. Approved material refers to a product on the FDOT QPL or as referenced in the Specifications. It is recommended that a product from the FDOT Qualified Product List (QPL) be utilized in the repair procedure if available. Substitute products will only be accepted if they meet all the requirements of the Specifications and provide no less quality than a comparable product on the referenced QPL.

All work performed under this Contract will be inspected by County Inspectors or CEI Consultants. The Contractor shall provide all facilities required for a thorough inspection of workmanship.

Abbreviations:

CF	-	Cubic Feet	LB	-	Pound
CY	-	Cubic Yard	LS	-	Lump Sum
EA	-	Each, Lump Sum	LF	-	Linear Feet
FDOT	-	Florida Department of Transportation	QPL	-	FDOT Qualified Product List
			SF	-	Square Feet
GA	-	Gallon	SY	-	Square Yard
HR	-	Hour	TN	-	Ton

General Performance Section 00001-1000

Section 00001-1001 Performance Bond, per $1000 for total cost > $250,000
A performance bond will be required for all projects that exceed $250,000. This is the cost of the bond for each $1,000 of the total contract cost including all other sections.

References: Standard Contract, Section 4
Standard Contract, Exhibit B
Units: per $1000

Mobilization Section 00000

Mobilization costs include all preparatory work and operations necessary to begin work on the projects not included in another item. Mobilization includes, but is not limited to, movement of personnel, construction equipment, supplies, safety equipment, sanitary equipment, temporary offices, and incidentals to the project site. The mobilization cost also includes removal of the same equipment and personnel from the site. Bonds, insurance, and construction material costs should not normally be included in this section. The cost of mobilization included in a project will depend on the type of repairs to be performed. Costs for only (1) type of either: small, medium, or heavy equipment mobilization will be included in the total construction cost of the project. Barge work mobilization may be combined with other types depending on the project. The distances referenced in the mobilization sections refers to the distance in miles from the Escambia County Central Office Complex (COC) also known as the One Stop Building: 3363 West Park Place, Pensacola, FL 32505.

Mobilization, Small Equipment Section 00010-1000

Section 00010-1001 Mobilization, 0-15 Miles
Section 00010-1002 Mobilization, 16-30 Miles
Section 00010-1003 Mobilization, 31-45 Miles
Section 00010-1004 Mobilization, 46+ Miles

Small equipment includes all equipment with the largest being trucks and flatbed trailers with hand operated tools and other such equipment. Projects limited to small equipment includes, but is not limited to: joint repair, deck cleaning, guardrail repair, sign placement, minor clearing and grubbing, gas powered hand tools, painting guardrail, routine deck maintenance and other similar work.

References: None
Units: EA

Mobilization, Medium Equipment Section 00020-1000

Section 00020-1001 Mobilization, 0-15 Miles
Section 00020-1002 Mobilization, 16-30 Miles
Section 00020-1003 Mobilization, 31-45 Miles
Section 00020-1004 Mobilization, 46+ Miles

Medium equipment includes all equipment with the largest being backhoes, small tractors, front end loaders, skid steers, snoopers and other such equipment. Projects limited to medium equipment includes, but is not limited to: Superstructure and Substructure repairs such as painting, concrete repairs, epoxy repairs, minor approach and wing wall repairs requiring earthwork, approach slab settlement repairs and other similar work.

References: None
Units: EA

Mobilization, Heavy Equipment Section 00030-1000

Section 00030-1001 Mobilization, 0-15 Miles
Section 00030-1002 Mobilization, 16-30 Miles
Section 00030-1003 Mobilization, 31-45 Miles
Section 00030-1004 Mobilization, 46+ Miles

Heavy equipment includes all equipment with the largest being cranes, excavators, concrete pumping, asphalt placement and other such equipment. Projects requiring heavy equipment includes, but is not limited to: pile replacement, cap replacement, asphalt placement, pumping for large concrete repairs, and other similar work.

References: None
Units: EA

Mobilization, Barge Work Section 00040-1000

Section 00040-1001 Mobilization, Small equipment for general repairs
Section 00040-1002 Mobilization, Crane required
Section 00040-1003 Mobilization, Crane and Concrete Required

The cost of mobilization for projects which require barge work depends on the type of work being performed. Small equipment for general repairs typically involves using only hand operated equipment such as for small pile repairs, wale replacement, or other similar work.

References: None
Units: EA

Inspection Transportation & Access Section 00050-1000

Section 00050-1001 Snooper Truck, 40 ft. Under Deck Reach, Mobilization
The section includes the cost of mobilizing a snooper truck and operator within a distance less than 45 miles. The snooper truck shall have a 40 ft. minimum reach under the bridge deck and shall have a bucket large enough to hold two people. Communication through a bucket mounted speaker or two-way radios shall be provided.

References: None
Units: EA

Section 00050-1002 Snooper Truck, 40 ft. Under Deck Reach, Usage
This is the hourly rate for the snooper truck and operator described in Section 00050-1002.

References: None
Units: HR

Section 00050-1003 Boat Mobilization
The section includes the cost of mobilizing a motor boat and operator to provide transportation to bridge substructure components and fender systems located in rivers and coastal bays within a distance less than 45 miles. The boat must have a minimum capacity of 4 persons (including operator) along with a total of 50 lbs of inspection gear and capable of a minimum speed of 15 knots.

References: None
Units: EA

Section 00050-1004 Boat Usage
This is the hourly rate for the boat and operator described in Section 00050-1003.

References: None
Units: HR

Bridge Deck & Approach Joints Section 00100

Joint Maintenance Section 00110-1000

Section 00110-1001 Clean-out Open Joint, (straight edges, deck only)
Clean joint to remove all debris using high-pressure air/ water and hand tools. Do not damage deck.

References: FDOT Maintenance Handbook Figure 1-1
Units: LF

Section 00110-1002 Clean-out Finger Joint, (deck, trough, and drain lines)
Clean joint, trough, and drain lines to remove all debris using high-pressure air/ water and hand tools. Do not damage deck, trough, or drain lines.

References: FDOT Maintenance Handbook Figure 1-3
Units: LF

Section 00110-1003 Tighten slide plate connection (at each loose location)
Add connection bolt to loose plate. Use 5/ 8”∅ x 6” long A36 threaded rod. Drill hole at 45° into concrete and epoxy grout with 5” minimum embedment. Use a void of 1”x3”x6” to be filled with epoxy.

References: FDOT Maintenance Handbook Section 1.3.5
FDOT Specification Section 416

Units: EA

Section 00110-1004 Armored Angle Joint Repair
Add 5/ 8”∅ A36 Drillco Maxi-Bolt at 45° into concrete and weld to angle. Use a void of 1”x3”x6” to be filled. Other proprietary undercutting anchors meeting or exceeding the Maxi-Bolt capacity may be used as approved by the Engineer.

References: FDOT Maintenance Handbook Section 1.3.2
Units: EA (each bolt location)

Section 00110-1005 Re-Seal Poured Silicone Joint
Cut out and remove damaged or inadequate joint sealant, clean joint, and re-seal using manufacturer’s written instructions. Replace any damaged baker rod. Use 1” joint width for estimating. Sealant must be listed on FDOT Qualified Product List (QPL).

References: FDOT Maintenance Handbook Section 1.3.6
Units: LF

Section 00110-1006 Cushion Joint Anchorage Repair
Drill and epoxy grout 5/ 8”∅ x 6” domed head A316 SS anchor with 5” minimum embedment. Use 3”x3”x1/ 4” A316 SS plate washer. Seal around bolt and 1’-0” wide section of joint with QPL silicone sealant.

References: FDOT Maintenance Handbook Figure 1-8
Units: LF

Section 00110-1007 Compression Seal Anchorage Repair
This section is used to price re-sealing the compression seal to the concrete or armor. Angle armor or concrete repair is not included here. This work consists of cleaning the loose section and sealing the leak with (1) component adhesive conforming to ASTM D 2835. Use 3 ½” deep seal for estimating.

References: FDOT Maintenance Handbook Figure 1-11
Units: LF

Joint Replacement Section 00120-1000

Section 00120-1001 Replace open joint with Poured Silicone Sealant (1” wide)
Section 00120-1002 Replace open joint with Poured Silicone Sealant (2” wide)
Section 00120-1003 Replace poured joint with Poured Silicone Sealant (1” wide)
Section 00120-1004 Replace poured joint with Poured Silicone Sealant (2” wide)

This work consists of removing any existing joint material, cutting back any existing asphalt overlay, cleaning the joint, repairing any concrete spalls or armor defects, placing joint dams if necessary and installing the new joint. Use 2” thick asphalt overlay with no spalls or armor to repair for estimating. Include costs for the nosing on each side of the joint. The preferred joint sealant system is the DOW Corning XJS Expansion Joint System followed by Watson Bowman Acme Wabo Crete Silicone Seal. Use a silicon sealant from the FDOT QPL and a nosing material recommended by the manufacturer to

be used with the sealant. Use a value of 1" for DIM 'A' in the example detail provided. A warranty period of (2) years from installation is required for joint systems.

References: Appendix A, Figures 120-1000-1 & 120-1000-2.
Units: LF

Section 00120-1005 Replace open joint with Compression Seal (2" existing joint width)
Section 00120-1006 Replace open joint with Compression Seal (3" existing joint width)

This work consists of cleaning the joint, repairing any concrete voids or armor defects, installing joint stops at the bottom of the armor, and installing the joint. An example joint system is the Armored Watson Bowman Acme WaboCompressionSeal. Use un-topped concrete with no concrete or armor defects for estimating. The joint system must have a (5) year minimum history of successful use on Florida Bridges. A warranty period of (2) years from installation is required for joint systems.

References: FDOT Maintenance Handbook Section 1.4.
Units: LF

Section 00120-1007 Replace poured joint with Compression Seal (2" existing joint width)
Section 00120-1008 Replace poured joint with Compression Seal (3" existing joint width)

This work consists of removing the existing joint material, cleaning the joint, repairing any concrete spalls, saw-cutting concrete, and installing the joint. An example joint system is the Watson Bowman Acme WaboCompressionSeal. Use un-topped concrete with no concrete defects for estimating. The joint system must have a (5) year minimum history of successful use on Florida Bridges. A warranty period of (2) years from installation is required for joint systems.

References: FDOT Maintenance Handbook Section 1.4.
Units: LF

Section 00120-1009 Replace Compression Seal (2" existing joint width)
Section 00120-1010 Replace Compression Seal (3" existing joint width)

This work consists of removing the existing compression seal, repairing any concrete or armor defects, cleaning the joint, and installing the new joint. An example joint system is the Watson Bowman Acme WaboCompressionSeal. Use un-topped concrete with no concrete or armor defects for estimating. The joint system must have a (5) year minimum history of successful use on Florida Bridges. A warranty period of (2) years from installation is required for joint systems.

References: FDOT Maintenance Handbook Section 1.4.
Units: LF

Section 00120-1011 Add Asphalt Reflective Crack Joint, Poured Silicone
This work consists of saw-cutting asphalt and placing a poured silicone joint over locations where a reflective crack will occur in the asphalt. These locations include the interface between the approach slab and the roadway, overlays placed over continuous concrete decks at the bents, and other similar locations. Use a 1" joint width for estimating as shown in the example detail provided. The sealant

shall be on the FDOT QPL list.

References: Appendix A, Figure 120-1011-1
Units: LF

Bridge Deck & Approach Repair Section 00200

Timber Decks Section 00210-1000

Section 00210-1001 General Timber Deck & Drain Cleaning
Clean deck and drains/ scuppers to remove all debris using high-pressure air/ water and hand tools. Do not damage deck.

References: None
Units: SF

Section 00210-1002 Replace Timber Deck Plank (3”x10”x26’) (Timber Stringers)
This work consists of removing the existing damaged plank and installing the new plank. Plank shall be 3”x10”x26’ long, No. 1 dense southern yellow pine treated in accordance with the FDOT Specifications. Orient planks bark side up. Connect the planks to each timber stringer using (2) 70d threaded-hardened steel nails, galvanized in accordance with AASHTO M111 or AASHTO M232. Drive nails at a slight angle. Use (19) stringers for estimating number of connections. Remove any rail connections and re-connect railing as required. Include disposal cost.

References: FDOT Specifications Section 470
Units: EA

Section 00210-1003 Replace Timber Deck Plank (3”x10”x26’) (Steel Stringers)
This work consists of removing the existing damaged plank and installing the new plank. Plank shall be 3”x10”x26’ long, No. 1 dense southern yellow pine treated in accordance with the FDOT Specifications. Orient planks bark side up. Connect the planks to each steel stringer using proprietary stainless steel or galvanized metal clips. Use (19) stringers for estimating number of connections. Remove any rail connections and re-connect railing as required. Include disposal cost.

References: FDOT Maintenance Handbook Section 2.4
FDOT Specifications Section 470
Units: EA

Section 00210-1004 Replace Timber Deck Plank (5”x10”x26’) (Timber Stringers)
This work consists of removing the existing damaged plank and installing the new plank. Plank shall be 5”x10”x26’ long, No. 1 dense southern yellow pine treated in accordance with the FDOT Specifications. Orient planks bark side up. Connect the planks to each timber stringer using (2) 70d threaded-hardened steel nails, galvanized in accordance with AASHTO M111 or AASHTO M232. Drive nails at a slight angle. Use (19) stringers for estimating number of connections. Remove any rail connections and re-connect railing as required. Include disposal cost.

References: FDOT Specifications Section 470
Units: EA

Section 00210-1005 Replace Timber Deck Plank (5”x10”x26’) (Steel Stringers)
This work consists of removing the existing damaged plank and installing the new plank. Plank shall be 5”x10”x26’ long, No. 1 dense southern yellow pine treated in accordance with the FDOT Specifications. Orient planks bark side up. Connect the planks to each steel stringer using proprietary stainless steel or galvanized metal clips. Use (19) stringers for estimating number of connections. Remove any rail connections and re-connect railing as required. Include disposal cost.

References: FDOT Maintenance Handbook Section 2.4
FDOT Specifications Section 470
Units: EA

Concrete Deck & Approach Slab Sealing Section 00220-1000

Follow FDOT Specification 400-21.5.1 to determine disposition of non-structural concrete cracks.

Section 00220-1001 General Concrete Deck & Drain Cleaning
This work consists of cleaning the deck, gutters, and deck drains (deck only) to remove and dispose of all debris using mechanical means along with high-pressure water and air. The deck, drains and joints shall not be damaged. Water used shall meet the requirements of the FDOT Specifications.

References: FDOT Maintenance Handbook Section 2.1
FDOT Specification Section 923
Units: SF

Section 00220-1002 Cleaning & Sealing Concrete Top & Side (Penetrant Sealer)
This work consists of cleaning the deck and sealing the concrete top and/ or side surface with penetrant sealer. Follow manufacturer’s written instructions for the approved material. This cost includes all costs and actions associated with Section 00220-1001.

References: FDOT Maintenance Handbook Section 2.2.2
FDOT Specification Section 413
Units: SF

Section 00220-1003 Cleaning & Sealing Concrete Bottom (Penetrant Sealer)
This work consists of cleaning the deck and sealing the concrete bottom surface with penetrant sealer. Follow manufacturer’s written instructions for the approved material. This cost includes all costs and actions associated with Section 00220-1001.

References: FDOT Maintenance Handbook Section 2.2.2
FDOT Specification Section 413
Units: SF

Section 00220-1004 Cleaning & Sealing Concrete Top & Side (Methacrylate Monomer)

This work consists of cleaning the deck and sealing the concrete top and/ or side surface with methacrylate monomer. Follow manufacturer's written instructions for the approved material. This cost includes all costs and actions associated with Section 00220-1001.

References: FDOT Maintenance Handbook Section 2.2.2
FDOT Specification Section 413
Units: SF

Section 00220-1005 Cleaning & Sealing Concrete Bottom (Methacrylate Monomer)
This work consists of cleaning the deck and sealing the concrete bottom surface with methacrylate monomer. Follow manufacturer's written instructions for the approved material. This cost includes all costs and actions associated with Section 00220-1001.

References: FDOT Maintenance Handbook Section 2.2.2
FDOT Specification Section 413
Units: SF

Section 00220-1006 Epoxy Injecting & Sealing Top & Side Cracks
This work consists of preparing the surface and sealing the crack according to the manufacturer's written instructions for the approved material. Consider a 0.024" wide x 2" deep crack for estimating purposes.

References: FDOT Maintenance Handbook Section 2.2.5
FDOT Specification Section 411 & 926
Units: LF

Section 00220-1007 Epoxy Injecting & Sealing Bottom Cracks
This work consists of preparing the surface and sealing the crack according to the manufacturer's written instructions for the approved material on FDOT QPL. Consider a 0.024" wide x 2" deep crack for estimating purposes.

References: FDOT Maintenance Handbook Section 2.2.5
FDOT Specification Section 411 & 926
Units: LF

Concrete Deck & Approach Slab Patching Section 00230-1000

Section 00230-1001 Concrete Top & Sides Patching (Type A) (Epoxy)
This work consists of cleaning and preparing the damaged deck area and patching the concrete using approved epoxy according to the manufacturer's written instructions. Type A is a repair above the top layer of reinforcing steel.

References: FDOT Maintenance Handbook Section 2.2.3 & 2.2.4
FDOT Specification Section 926
Units: CF

Section 00230-1002 Concrete Top & Sides Patching (Type A) (Polymer)
This work consists of cleaning and preparing the damaged deck area and patching the concrete using approved polymer material according to the manufacturer's written instructions. Type A is a repair above the top layer of reinforcing steel.

References: FDOT Maintenance Handbook Section 2.2.3
FDOT Specification Section 930
Units: CF

Section 00230-1003 Concrete Top & Sides Patching (Type B) (Polymer)
This work consists of cleaning and preparing the damaged deck area and patching the concrete using approved polymer material according to the manufacturer's written instructions. Type B is a repair from the deck surface to at least 1 inch below the top mat of reinforcement.

References: FDOT Maintenance Handbook Section 2.2.3
FDOT Specification Section 930
Units: CF

Section 00230-1004 Concrete Top & Sides Patching (Type B) (Grout)
This work consists of cleaning and preparing the damaged deck area and patching the concrete using approved cementitious grout according to the manufacturer's written instructions. Type B is a repair from the deck surface to at least 1 inch below the top mat of reinforcement.

References: FDOT Maintenance Handbook Section 2.2.3
FDOT Specification Section 930
Units: CF

Section 00230-1005 Concrete Deck Bottom Patching (Type A) (Epoxy)
This work consists of cleaning and preparing the damaged deck area and patching the concrete using approved epoxy according to the manufacturer's written instructions. Type A is a repair below the bottom layer of reinforcing steel for bottom surfaces.

References: FDOT Maintenance Handbook Section 2.2.3 & 2.2.4
FDOT Specification Section 926
Units: CF

Section 00230-1006 Concrete Deck Bottom Patching (Type A) (Polymer)
This work consists of cleaning and preparing the damaged deck area and patching the concrete using approved polymer material according to the manufacturer's written instructions. Type A is a repair below the bottom layer of reinforcing steel for bottom surfaces.

References: FDOT Maintenance Handbook Section 2.2.3
FDOT Specification Section 930
Units: CF

Section 00230-1007 Concrete Deck Bottom Patching (Type B) (Polymer)
This work consists of cleaning and preparing the damaged deck area and patching the concrete using

approved polymer material according to the manufacturer's written instructions. Type B is a repair from the deck bottom surface to at least 1 inch above the bottom mat of reinforcement for bottom surfaces.

References: FDOT Maintenance Handbook Section 2.2.3
FDOT Specification Section 930
Units: CF

Section 00230-1008 Concrete Deck Bottom Patching (Type B) (Grout)
This work consists of cleaning and preparing the damaged deck area and patching the concrete using approved cementitious grout according to the manufacturer's written instructions. Type B is a repair from the deck bottom surface to at least 1 inch above the bottom mat of reinforcement for bottom surfaces.

References: FDOT Maintenance Handbook Section 2.2.3
FDOT Specification Section 930
Units: CF

Section 00230-1009 Concrete Deck Patching (Type C) (Grout)
This work consists of cleaning and preparing the damaged deck area and patching the concrete using approved cementitious grout according to the manufacturer's written instructions. The non-shrink grout used shall have a 28-day compressive strength of at least 5,000 psi. Type C is a full deck depth repair.

References: FDOT Maintenance Handbook Section 2.2.3
FDOT Specification Section 930
Units: CF

Section 00230-1010 Concrete Deck Work for Beam Repair or Replacement
This work consists of concrete demolition to remove or expose a defective beam. The procedure includes saw-cutting the deck to form a straight and neat line on each side of the beam. Demolition will utilize tools and methods to expose, but not damage existing deck reinforcing other than where the reinforcing is cut to allow the bars to be bent. The exposed reinforcing will be bent to allow existing beam removal and new beam placement. This work includes demolition and reinforcing bending both out of the way and back into place. It does not include adding additional reinforcing or replacing the concrete. For estimating, use an 8.5" thick concrete deck reinforced with #5 bars at 6" on center top and bottom.

References: FDOT Specification Section 110.6
Units: SF

Section 00230-1011 General Concrete Repair Sidewalks and Curbs
This work consists of cleaning and preparing the damaged area and patching the concrete using a cementitious grout according to the manufacturer's written instructions. The non-shrink grout used shall have a 28-day compressive strength of at least 4,000 psi.

References: FDOT Maintenance Handbook Section 2.2.3

FDOT Specification Section 930
Units: CF

Section 00230-1012 Concrete Repair, Post & Rail Barriers
This work consists of cleaning and preparing the damaged area and using forms as required to patch the railing. Use a cementitious non-shrink grout with a 28-day compressive strength of at least 5,000 psi.

References: FDOT Maintenance Handbook Section 3.1
FDOT Specification Section 930
Units: CF

Section 00230-1013 Concrete Repair, Jersey Type Barrier & Parapets
This work consists of cleaning and preparing the damaged area and patching the barrier or wall. Use a cementitious non-shrink grout with a 28-day compressive strength of at least 5,000 psi.

References: FDOT Maintenance Handbook Section 3.1
FDOT Specification Section 930
Units: CF

Section 00230-1014 Concrete Deck Repair Miscellaneous Reinforcing
This work consists of the material and labor required to place steel reinforcing in deck concrete repairs. Reinforcing bars are typically #5 or #6.

References: FDOT Specification Section 415
Units: LB

Section 00230-1015 Drill & Epoxy Grout Deck Reinforcing
This work consists of preparing a hole and epoxy grouting reinforcing steel as part of a concrete repair. This section includes the cost of epoxy material and labor for anchoring a reinforcing bar. The reinforcing steel is not included here. Use a QPL approved epoxy. Use a 15.2" embedment and a 0.875"∅ hole for grouting a #6 bar for estimating purposes.

References: FDOT Specification Section 416
Units: EA

Section 00230-1016 Saw Cut Existing Concrete for Demolition
This work consists of saw-cutting existing concrete and reinforcing steel in a straight line for removal. Use a concrete depth of 8" with #5 bars top and bottom at 12" on center for estimating purposes.

References: None
Units: LF

Section 00230-1017 Saw Cut Existing Concrete for Joint Sealant
This work consists of saw-cutting existing concrete surfaces for placing joints. Use a 0.50" wide x 1.5" deep joint for estimating purposes.

References: None
Units: LF

Section 00230-1018 Remove Existing Concrete
This work consists of chipping/ breaking and removing concrete from bridge decks, sidewalks, curbs, concrete barriers or approach slabs, cleaning the disturbed area, and legally disposing of the concrete debris.

References: None
Units: CY

Section 00230-1019 General Bridge Deck Concrete
This work consists of forming and pouring Class II Bridge Deck concrete for large repairs. Include costs for a temporary form to be placed underneath the existing bridge deck on each side of the pour. For estimating purposes, use a form width that does not exceed 3'. This section does not include reinforcing costs.

References: FDOT Specification Section 346 and 400.
Units: CY

Section 00230-1020 General Flat Concrete Work
This work consists of forming and pouring Class I (Pavement) concrete with fiber mesh reinforcement for sidewalks, curbs, and other miscellaneous items for large repairs. This section does not include reinforcing costs.

References: FDOT Specification Section 346 and 400.
Units: CY

Bridge Deck Drainage Section 00240-1000

Section 00240-1001 Clean & Flush Deck Drain Lines
This work consists of cleaning the deck drain lines and downspouts. Use a 6"∅ drain pipe for estimating.

References: FDOT Maintenance Handbook Section 2.6.1
Units: LF

Section 00240-1002 Replace Deck Drain Section (6"∅ Fiberglass)
This work consists of replacing a section of drainage pipe with a 6"∅ fiberglass pipe meeting the requirements of ASTM D-2996 and the accelerated UV weathering performance requirements of ASTM G154.

References: None
Units: LF

Section 00240-1003 Add Deck Drain Extensions (6"∅ Fiberglass)
This work consists of adding an open deck drain extension to an existing drain opening to extend the

drain water below and away from adjacent structural components. Use 6”∅ x 24” long section of fiberglass pipe (instead of PVC) meeting the requirements of ASTM D-2996 and the accelerated UV weathering performance requirements of ASTM G154. Use a flange and waterproof gasket to mount the extension to the bottom of the bridge deck using stainless steel expansion bolts.

References: FDOT Maintenance Handbook Section 2.6.4
Units: EA

Bridge Deck Overlays Section 00300

Asphalt Patching and Removing Section 00310-1000

Section 00310-1001 Remove Existing Asphalt (0”-2” thick)
Section 00310-1002 Remove Existing Asphalt (2”-4” thick)
Section 00310-1003 Remove Existing Asphalt (4”+ thick)
This work consists of the removal of damaged or cut-out asphalt from County property and its legal disposal.

References: None
Units: SF

Section 00310-1004 Saw-Cut Existing Asphalt
Asphalt shall be cut using equipment that will produce a clean straight line without damaging the adjacent asphalt edges. Use a depth of 3” for estimating.

References: None
Units: LF

Section 00310-1005 Asphalt Overlay Patch (Polymer Modified Cold Asphalt) (0”-2” thick)
Section 00310-1006 Asphalt Overlay Patch (Polymer Modified Cold Asphalt) (2”-4” thick)
Section 00310-1007 Asphalt Overlay Patch (Polymer Modified Cold Asphalt) (4”+ thick)
This work consists of repairing a section of asphalt overlay using polymer modified cold asphalt. Preparation, cleaning and material application shall be in accordance with the manufacturer’s written instructions. Saw-cutting a larger repair area is not included in this section.

References: None
Units: SF

Section 00310-1008 Asphalt Overlay Patch (Rapid Hardening Mortar) (0”-2” thick)
Section 00310-1009 Asphalt Overlay Patch (Rapid Hardening Mortar) (2”-4” thick)
Section 00310-1010 Asphalt Overlay Patch (Rapid Hardening Mortar) (4”+ thick)
This work consists of repairing a section of asphalt overlay using a rapid hardening mortar. Use an approved material listed on the FDOT QPL for predominantly horizontal surfaces. Preparation, cleaning and material application shall be in accordance with the manufacturer’s writing instructions. Saw-cutting a larger repair area is not included in this section.

References: FDOT Specification Section 930
Units: SF

Asphalt Milling Section 00320-1000

Section 00320-1001 Mill Existing Asphalt – 2" Thickness, (< 1500 SY)
Section 00320-1002 Mill Existing Asphalt – 2" Thickness, (> 1500 SY)
Section 00320-1003 Mill Existing Asphalt – 3" Thickness, (< 1500 SY)
Section 00320-1004 Mill Existing Asphalt – 3" Thickness, (> 1500 SY)

Measures shall be taken to avoid damage to the existing bridge deck below the overlay during the milling process. This shall include inspections prior to milling operation to determine the actual overlay depth at the beginning, middle, and ends of each span at 6' intervals across the width of the bridge including the edges and any change in cross slopes.

References: FDOT Specification Section 327
Units: SY

New Deck Overlay Section 00330-1000

Section 00330-1001 2" Thick Type SP 12.5 Asphalt, (< 1500 SY)
Section 00330-1002 2" Thick Type SP 12.5 Asphalt, (> 1500 SY)
Section 00330-1003 3" Thick Type SP 12.5 Asphalt, (< 1500 SY)
Section 00330-1004 3" Thick Type SP 12.5 Asphalt, (> 1500 SY)

References: County Paving Specification Section 2500
FDOT Maintenance Handbook Section 2.2.6
Units: SY

Section 00330-1005 Concrete Deck Waterproofing Membrane
This work consists of cleaning the existing concrete surface after milling and applying a preformed waterproofing membrane designed for asphalt overlays. Use Sealtight MEL-DEK by W.R. Meadows of Georgia as the approved product. Apply following the manufacturer's written instructions.

References: None
Units: SY

Section 00330-1006 Thin Polymer Overlay
This work consists of preparing the existing concrete surface and applying a thin polymer waterproofing overlay designed for bridge decks. Use Mark-163 FLEXOGRID by Poly-Carb, Inc., as the approved product at an average application thickness of 0.375". Apply following the manufacturer's written instructions. A (2) year warranty is required.

References: None
Units: SY

Traffic Control & Signage Section 00400

Traffic Signage Section 00410-1000

Section 00410-1001 Weight Limit Signs
This work consists of the materials and labor required to place the (4) weight limit signs as shown in FDOT Index No. 17357. Distances, weights and positions will be provided by the County. The cost is for placing (1) of the (4) signs.

References: FDOT Design Standards Index No. 17357
Units: EA

Section 00410-1002 Narrow Bridge Signs
This work consists of the materials and labor required to place the (8) OM3R signs and the (1) W5-2 Narrow Bridge sign combined with the W13-1 speed limit sign shown in FDOT Index No. 17359 Sheet 1 of 2 for 2-Way Traffic. Do not include costs for lane striping or pavement reflectors in this section. The cost is a lump sum for all (9) signs.

References: FDOT Design Standards Index No. 17359
Units: LS

Section 00410-1003 Relocate Traffic Signs
Section 00410-1004 Bike Lane Ahead Sign, R3-16
Section 00410-1005 Bike Lane Ahead Sign, R3-16a
Section 00410-1006 Regulatory Sign Black on White Metal Sign

This work consists of the materials and labor required to relocate or place the signs indicated.

References: County Paving Specification Section 4000
Units: EA

Temporary Markings Section 00420-1000

Section 00420-1001 Temporary 6" Solid Stripe, White or Yellow
Section 00420-1002 Temporary 6" 10-30 Skip Stripe, White or Yellow
Section 00420-1003 Temporary 6" 6-10 Skip Stripe, White or Yellow

This work consists of placing temporary striping during bridge deck resurfacing or repairs.

References: County Paving Specification Section 4040
FDOT Specification Section 710
Units: LF

Thermoplastic Markings Section 00430-1000

Section 00430-1001 Thermoplastic 6" Solid Stripe, White or Yellow
Section 00430-1002 Thermoplastic 6" 10-30 Skip Stripe, White or Yellow
Section 00430-1003 Thermoplastic 6" 6-10 Skip Stripe, White or Yellow

This work consists of placing striping following bridge deck resurfacing or repairs.

References: County Paving Specification Section 4040
FDOT Specification Section 711
Units: LF

Section 00430-1004 Raised Retro-Reflective Pavement Markers
This work consists of placing reflective pavement markers as directed by the County.

References: County Paving Specification Section 4040
FDOT Specification Section 706 & 970
Units: EA

Work Zone Safety & Control Section 00440-1000

Section 00440-1001 Shut-Down (1) Lane (< 1000')
Section 00440-1002 Shut-Down (1) Lane (1000' +)

This work consists of all materials, equipment and personnel required to shut-down a single lane of traffic on a multi-lane highway for the purpose of performing repairs. Use a shut-down time of (8) hours for estimating.

References: County Paving Specification Section 4060
FDOT Design Standards Index No. 600, 613 & 614
Units: LS

Section 00440-1003 Shut-Down (1) Lane for 2-way, 2-lane Traffic (< 1000')
Section 00440-1004 Shut-Down (1) Lane for 2-way, 2-lane Traffic (1000' +)

This work consists of all materials, equipment and personnel required to shut-down a single lane of traffic on an undivided 2-way 2-lane highway and to control traffic on the single open lane. Use a shut-down time of (8) hours for estimating.

References: County Paving Specification Section 4060
FDOT Design Standards Index No. 600 & 603
Units: LS

Section 00440-1005 Certified MOT Traffic Safety Plan
Develop and provide an approved MOT traffic safety plan including both the map type and written type by a Certified Work Zone Safety Traffic Supervisor.

References: County Paving Specification Section 4060

Units: EA

Section 00440-1006 Type K Temporary Barrier (place & remove), FDOT Index 414
This work consists of placing the temporary barrier with required pinning and removing the barrier. Consider the barrier being placed on an asphalt highway for no longer than (3) months for estimating.

References: FDOT Design Standards Index No. 414
FDOT Specification Section 521
Units: LF

Section 00440-1007 Variable Message Sign
The variable message sign shall be a solar powered, trailer mounted sign listed on the FDOT QPL.

References: FDOT Design Standards Index No. 600
FDOT Specification Section 990
Units: EA/ Day

Section 00440-1008 Black on Orange Warning Sign
The warning sign shall be a W20- sign with black lettering and orange (reflective) background. The length of a diamond shaped side, "A", shall be 48". Cost includes a 2-post mounting. The "W" designation refers to the file name used in the Standard Highway Signs Manual.

References: FDOT Design Standards Index No. 600
FHWA Standard Highway Signs
Units: EA/ Day

Section 00440-1009 Type I Barricade
Section 00440-1010 Type II Barricade
Section 00440-1011 Type III Barricade

The barricade shall be listed on the FDOT QPL.

References: FDOT Design Standards Index No. 600
Units: EA/ Day

Section 00440-1012 Type A Low Intensity Flashing Lights
Section 00440-1013 Type B High Intensity Flashing Lights

Provide flashing lights listed on the FDOT QPL.

References: FDOT Design Standards Index No. 600
Units: EA/ Day

Section 00440-1014 36" Reflective Barrel / Drum
Section 00440-1015 28" or Larger Reflective Striped Cone

The barrel and cone shall be listed on the FDOT QPL.

References: FDOT Design Standards Index No. 600
Units: EA/ Day

Section 00440-1016 Flag Man: Day Work
Provide a flag man to direct traffic for (8) hour work day.

References: County Paving Specification Section 4060
Units: EA/ Day

Section 00440-1017 Flag Man: Night Work
Provide a trained flag man to direct traffic for (8) hour night work shift with all appropriate and required night equipment. Provide cone collars at night.

References: County Paving Specification Section 4060
Units: EA/ Day

Traffic Handrails & Guardrails Section 00500

Upgrade Handrail Section 00510-1000

Section 00510-1001 Aluminum Pipe Handrail Picket for Pedestrians, FDOT Index 860
Section 00510-1002 Aluminum Pipe Handrail Picket for Bicycles, FDOT Index 860

This work consists of the materials and labor required to place the indicated handrails on existing bridges.

References: FDOT Design Standards Index No. 860 & 861
Units: LF

Upgrade Approach Guardrail Section 00520-1000

Section 00520-1001 W-Beam Guardrail, FDOT Index 400
Section 00520-1002 Thrie-Beam Guardrail, FDOT Index 400

This work consists of the materials and labor required to place the indicated guardrail sections according to the FDOT Standard Index drawings. This work includes the guardrail (galvanized) along with the appropriate posts, offset blocks, and connection hardware. The cost for miscellaneous asphalt repair after driving posts is also included. The rails are placed in 12’-6” sections with posts at 6’-3” on center. This section will be used for adding new guardrail as well as replacing damaged railing. Do not include the cost of removing existing guardrail in this section.

References: FDOT Design Standards Index No. 400
FDOT Specifications Section 536
Units: LF

Section 00520-1003 Approach End Anchorage Assembly, Flared System, 37.5'
Section 00520-1004 Approach End Anchorage Assembly, Parallel System, 37.5'

This work consists of the materials and labor required to place the indicated end anchorage assembly for the guardrail according to the FDOT Standard Index drawings as well as the manufacturer's approved details. The end anchorage assembly chosen (galvanized) must be on the FDOT QPL and be suitable for all design speeds. The cost of the end anchorage assembly includes all guardrail items shown on the details from the point indicated as typical post spacing (or transition section) to the end of the guardrail facing traffic.

References: FDOT Design Standards Index No. 400
FDOT QPL
FDOT Specifications Section 536
Units: EA

Section 00520-1005 Guardrail Transition Section for Existing Bridge, FDOT Index 402
This work consists of the materials and labor required to place a transition guardrail section according to the FDOT Standard Index drawings. The cost of the transition section (galvanized) includes all guardrail items shown on the standard details for (1) of the listed schemes from the bridge to the typical guardrail (or end anchorage assembly) including the W-beam to Thrie beam transition section and miscellaneous asphalt repair. This section does not include the cost for connecting the guardrail to the bridge guardrail.

References: FDOT Design Standards Index No. 402
FDOT Specifications Section 536
Units: EA

Section 00520-1006 Guardrail Transition Section for Existing Bridge, FDOT Index 403
This work consists of the materials and labor required to place a transition guardrail section according to the FDOT Standard Index drawings. The cost of the transition section (galvanized) includes all guardrail items shown on the standard details for (1) of the listed schemes from the bridge to the typical guardrail (or end anchorage assembly) including the W-beam to Thrie beam transition section and miscellaneous asphalt repair. This section does not include the cost for connecting the guardrail to the bridge guardrail.

References: FDOT Design Standards Index No. 403
FDOT Specifications Section 536
Units: EA

Section 00520-1007 Guardrail Bridge Anchorage Assembly, FDOT Index 402
This work consists of the materials and labor required to connect the guardrail transition section to the bridge guardrail according to the FDOT Standard Index drawings. The cost of this section includes all guardrail items and hardware shown on the standard details for (1) of the listed schemes.

References: FDOT Design Standards Index No. 402
FDOT Specifications Section 536

Units: EA

Section 00520-1008 Remove Existing Guardrail
This work consists of the removal and disposal of existing approach guardrail.

References: FDOT Design Standards Index No. 402
Units: LF

Retrofit Bridge Guardrail Section 00530-1000

Section 00530-1001 Traffic Railing (Thrie Beam Retrofit) Narrow Curb, FDOT Index 471
Section 00530-1002 Traffic Railing (Thrie Beam Retrofit) Wide Strong Curb, Type 1, FDOT Index 472
Section 00530-1003 Traffic Railing (Thrie Beam Retrofit) Wide Strong Curb, Type 2, FDOT Index 473
Section 00530-1004 Traffic Railing (Thrie Beam Retrofit) Intermediate Curb, FDOT Index 474
Section 00530-1005 Traffic Railing (Thrie Beam Retrofit) Wide Curb, Type 1, FDOT Index 475
Section 00530-1006 Traffic Railing (Thrie Beam Retrofit) Wide Curb, Type 2, FDOT Index 476

This work consists of the materials and labor required to replace or modify the existing bridge railing to install the indicated Thrie Beam railing (galvanized) according to the FDOT Standard Index drawings. The cost includes all preparatory and replacement work that must be performed on the existing bridge railing. Do not include concrete repair costs that might be required for a particular bridge.

References: FDOT Design Standards Index No. 471, 472, 473, 475, 476
FDOT Specifications Section 536
Units: LF

Metal Guardrail Miscellaneous Repair Section 00540-1000

Section 00540-1001 Replace W-Beam Rail Connection Bolts (W-Beam Post)
This work consists of adding or replacing a 5/ 8”∅ x 1 ½” long galvanized A36 or A307 bolt. Include a 3”x1 ¾”x3/ 16” thick plate washer.

References: FDOT Design Standards Index No. 400
Units: EA

Section 00540-1002 Replace W-Beam Rail Connection Bolts (Concrete Post)
This work consists of adding or replacing a 5/ 8”∅ x 10” long galvanized A36 or A307 bolt. Include a 3”x1 ¾”x3/ 16” thick plate washer on the rail side and a 3”x3”x1/ 4” thick plate washer on the post side.

References: FDOT Design Standards Index No. 400
Units: EA

Section 00540-1003 Replace Rail Post Connection to Bridge (Concrete Post to Curb)
This work consists of adding or replacing a 1”∅ x 20” long AISI 304/ 316 SS threaded rod to connect a concrete post to a concrete curb or deck. Cost includes the rod and epoxy installation. Include a

heavy hex head nut and a 3”x3”x1/ 4” thick galvanized plate washer on the post side. Rod shall be epoxy anchored into the deck or curb concrete with a 9” embedment using an approved epoxy on the FDOT QPL. Follow the epoxy manufacturer’s written instructions.

References: FDOT Specification Section 416
Units: EA

Section 00540-1004 Replace Rail Post Connection to Bridge (W-Beam Post to Curb)
This work consists of adding or replacing a 1”∅ x 12” long AISI 304/ 316 SS threaded rod to connect a steel post to a concrete curb or deck. Cost includes the rod and epoxy installation. Include a heavy hex head nut on the post side. Rod shall be epoxy anchored into the deck or curb concrete with a 9” embedment using an approved epoxy on the FDOT QPL. Follow the epoxy manufacturer’s written instructions.

References: FDOT Specification Section 416
Units: EA

Section 00540-1005 Correct W-Beam Rail Splice Direction (per section)
This work consists of removing a 12’-6” long section of W-Beam guardrail and correcting the orientation of the lap splice to place the leading rail section on top in the direction of traffic. Include the cost of replacing (8) 5/ 8”∅x1 ¼” long rail splice bolts.

References: FDOT Design Standards Index No. 400 (19 of 26)
Units: EA Splice

Section 00540-1006 Guardrail Reflectors
This work consists of adding reflectors to an existing guardrail. Include the cost of the reflector and mounting to either a concrete or metal post.

References: FDOT Design Standards Index No. 400 (17 of 26)
Units: EA

Section 00540-1007 Paint Metal Rail System
This work consists of painting a metal W-Beam or Thrie Beam guardrail with a zinc rich paint according to FDOT Specification Section 561. Use a product listed on the FDOT QPL for painting existing steel structures. Include the cost of all preparatory work as detailed in the specifications and according to the manufacturer’s written instruction. The cost for painting posts is not included in this section.

References: FDOT Specifications Section 561
Units: LF

Superstructure Repair Section 00600

Superstructure Cleaning & Painting Section 00610-1000

Section 00610-1001 Cleaning Bearings, Bearing Seats, Bent/Pier Tops
This work consists of cleaning the bearing area of the superstructure using water and air spraying equipment at pressures high enough to remove dirt and debris without damage to concrete or painted steel surfaces. In addition to washing, mechanically clean areas with hand tools as required to ensure that the bearing conditions allow movement of the superstructure as designed. Water used shall meet the requirements of the FDOT Specifications.

References: FDOT Maintenance Handbook Section 4.1.1
FDOT Specifications Section 923
Units: SF

Section 00610-1002 Cleaning Beams
This work consists of cleaning the superstructure beams using water and air spraying equipment at pressures high enough to remove dirt and debris without damage to concrete or painted steel surfaces. In addition to washing, mechanically clean areas with hand tools as required. Water used shall meet the requirements of the FDOT Specifications.

References: FDOT Maintenance Handbook Section 4.1.1
FDOT Specifications Section 923
Units: SF

Section 00610-1003 Spot Painting (inorganic zinc)
This work consists of cleaning the damaged or corroded galvanized steel superstructure surface and coating the area with a zinc rich coating listed on the FDOT QPL in accordance with FDOT Specification Section 562.

References: FDOT Maintenance Handbook Section 4.1.2
FDOT Specifications Section 562
Units: SF

Section 00610-1004 Spot Painting (oil base)
This work consists of cleaning the damaged or corroded painted steel superstructure surface and painting the area with an oil base paint listed on the FDOT QPL in accordance with FDOT Specification Section 561. Do not include costs for the removal of lead based paint.

References: FDOT Maintenance Handbook Section 4.1.2
FDOT Specifications Section 561
Units: SF

Bearing Maintenance & Repair Section 00620-1000

Section 00620-1001 Jacking & Supporting Superstructure (30 ton lift)
This work consists of lifting the superstructure in order to repair or replace bearings. The lift shall be performed in accordance with the Maintenance Handbook in a manner that does not damage the superstructure or substructure. The cost for this section is for performing a 30 ton lift at (1) beam location. There will be a minimum of (4) lift locations for bearing repair or replacement. Consider the

pile cap capable of supporting the jacks for estimating. Include the cost of lowering the superstructure and removing the jacks.

References: FDOT Maintenance Handbook Section 4.3
Units: EA

Section 00620-1002 Jacking & Supporting Superstructure (60 ton lift)
This work consists of lifting the superstructure in order to repair or replace bearings. The lift shall be performed in accordance with the Maintenance Handbook in a manner that does not damage the superstructure or substructure. The cost for this section is for performing a 60 ton lift at (1) beam location. There will be a minimum of (4) lift locations for bearing repair or replacement. Consider the pile cap capable of supporting the jacks for estimating. Include the cost of lowering the superstructure and removing the jacks.

References: FDOT Maintenance Handbook Section 4.3
Units: EA

Section 00620-1003 Re-set Elastomeric Bearing Pad
This work consists of removing an elastomeric bearing pad in order to clean the surfaces of the pad, beam flange, and cap/ bearing seat. After cleaning, the pad is placed in the correct position. Jacking & supporting the superstructure is not included in this section.

References: FDOT Maintenance Handbook Section 4.2.5 and 4.4.2
Units: EA

Section 00620-1004 Replace Composite Neoprene Elastomeric Bearing Pad
This work consists of replacing a bearing pad with a new composite neoprene elastomeric bearing pad meeting the requirements of FDOT Specification Section 932. Jacking & supporting the superstructure is not included in this section.

References: FDOT Specifications Section 932-2.2
Units: CF

Section 00620-1005 Clean & Lubricate Steel Bearing Assembly
This work consists of removing the bearing plates for cleaning and rust removal, lubricating the plates, and replacing the bearing. A typical plate size is 8”x15”x1”. Jacking & supporting the superstructure is not included in this section.

References: FDOT Maintenance Handbook Section 4.2.1
Units: EA

Section 00620-1006 Replace Steel Base Plate
This work consists of removing an existing corroded or damaged base plate and adding a new ASTM A36 painted steel base plate. Consider the existing anchor bolts to be in useable condition for estimating. Jacking & supporting the superstructure is not included in this section.

References: FDOT Specifications Section 962

Units: LB

Section 00620-1007 Add Bearing Keeper Plates
This work consists of adding a keeper plate assembly to a bearing to keep the bearing in the proper position. The keeper consists of a U-shaped frame using ASTM A36 L4x3x1/ 2 LLH galvanized angles with full penetration welded corners. ((2) 1'-6" legs and (1) 2'-0" leg) Connect to the concrete cap beam using (2) ¾"∅ x 10" long AISI 304/ 316 stainless steel threaded rods epoxy grouted with a 7" embedment.

References: FDOT Specifications Section 416 & 962
Units: EA

Concrete Beam & Girder Repair Section 00630-1000

Section 00630-1001 Crack Repair (epoxy injection)
This work consists of preparing the surface and sealing the crack according to the manufacturer's written instructions for the approved material. Consider a 0.024" wide x 2" deep crack for estimating purposes.

References: FDOT Maintenance Handbook Section 4.5.1
FDOT Specification Section 411
Units: LF

Section 00630-1002 Crack Repair (penetrant sealer)
This work consists of preparing the surface and sealing the crack according to the manufacturer's written instructions for the approved material. Consider a 0.011" wide x 2" deep crack for estimating purposes.

References: FDOT Maintenance Handbook Section 4.5.1
FDOT Specification Section 413
Units: LF

Section 00630-1003 Crack Repair (cementitious, vertical)
This work consists of preparing the surface and repairing the concrete defect using a material for predominantly vertical or overhead repairs that meets the requirements of the Specifications. Follow all manufacturer's written instruction for repair procedures.

References: FDOT Specification Section 930
Units: CF

Section 00630-1004 Crack Repair (cementitious, horizontal)
This work consists of preparing the surface and repairing the concrete defect using a material for predominantly horizontal repairs that meets the requirements of the Specifications. Follow all manufacturer's written instruction for repair procedures.

References: FDOT Specification Section 930
Units: CF

Section 00630-1005 Concrete Beam Repair Miscellaneous Reinforcing
This work consists of the material and labor required to place steel reinforcing for concrete beam repairs.

References: FDOT Specification Section 415
Units: LB

Section 00630-1006 Drill & Epoxy Grout Beam Reinforcing
This work consists of preparing a hole and epoxy grouting reinforcing steel as part of a concrete repair. This section includes the cost of epoxy material and labor for anchoring a reinforcing bar. The reinforcing steel is not included here. Use an epoxy meeting the requirements of the Specifications. Use a 25.75" embedment and a 1.5"∅ hole for grouting a #10 bar for estimating purposes.

References: FDOT Specification Section 416
Units: EA

Section 00630-1007 Carbon Fiber Reinforcing
This work consists of preparing the concrete surface and attaching a carbon fiber laminate for structural strengthening or repair. Use Sika CarboDur Type S 1012 laminate along with Sikadur 30 epoxy resin. Follow all manufacturer's written instructions for installation. The laminate strips may be installed vertically along the beam webs and wrapped around the flange or they may be installed along the bottom of the beam. Do not include the cost of concrete surface repairs that may be needed prior to applying the laminate.

References: Sika CarboDur Product Data Sheet
Units: LF

Section 00630-1008 Shear Crack Stitching
This work consists of drilling holes down through the top of the deck at an angle perpendicular to the web cracks to be stitched as detailed in the FDOT Maintenance Handbook. For estimating, use a 7/ 8"∅ hole x 30" deep drilled at a 45° angle. Epoxy grout a 24" long #6 bar using an epoxy meeting the requirements of the Specifications. The cost of this section is for installing (1) bar.

References: FDOT Maintenance Handbook Section 4.5.1 D.
FDOT Specification Section 416
Units: EA

Section 00630-1009 Prestressed Tendon Splicing (GRABB-IT) (1/2" strand)
This work consists of repairing a broken 1/ 2"∅ prestressed tendon using a Grabb-It splice assembly manufactured by Prestress Supply, Inc. For estimating purposes, consider a 4' long section of strand to be damaged and include costs for a 4' long section of ½" ∅, 270 ksi low-relaxation strand and a splice chuck.

References: FDOT Maintenance Handbook Section 4.5.3
Units: EA

Section 00630-1010 Sealing Concrete Superstructures (penetrant sealer)
This work consists of preparing and sealing concrete superstructures (below deck) according to the Specifications. This section includes cleaning in the preparation but does not include any concrete repair. Use a penetrant sealer listed on the FDOT QPL. The sealer is applied over the entire surface of the superstructure.

References: FDOT Maintenance Handbook Section 4.5.3
FDOT Specification Section 413
Units: SF

Steel Beam Repair & Replacement Section 00640-1000

Section 00640-1001 Welded Corrosion Repair
This work consists of cutting-out a section of steel beam with advanced corrosion and adding a replacement section by full-penetration welding. For estimating, use the replacement of a "T" section with a ½"x12"x12" web plate and a 1"x12"x12" flange plate. Use ASTM A-709 Grade 50 steel and include painting costs for the repaired section.

References: FDOT Maintenance Handbook Section 4.6.1
FDOT Specification Section 460
Units: EA

Section 00640-1002 Bolted Corrosion Repair
This work consists of the same procedure as Section 00640-1001, but the replacement section is bolted to the existing beam rather than welded. This will include field-drilling bolt holes in the existing beam. For estimating, use the replacement of a "T" section with a ½"x12"x12" web plate and a 1"x12"x12" flange plate. For the web splice, use (2) 3/ 8"x12"x18" with (12) 1"∅ A325 fully tightened bolts. For the flange splice, use (1) ½"x12"x24" and (2) ½"x5"x24" plates with (24) 1"∅ A325 fully tightened bolts. Use ASTM A-709 Grade 50 steel and include painting costs for the repaired section.

References: FDOT Maintenance Handbook Section 4.6.1
FDOT Specification Section 460
Units: EA

Section 00640-1003 Crack Repair
This work consists of identifying crack limits and drilling holes at each end of the crack. A reinforcement plate, 1/ 8" thicker than the cracked plate, is added to span over the crack and bolted to the existing beam using high strength bolts. Bolts are also placed through the holes at the ends of the crack. For estimating, use a 5/ 8"x12"x12" plate with (8) 1"∅ A325 fully tightened bolts. Use ASTM A-709 Grade 50 steel and include painting costs for the repaired section.

References: FDOT Maintenance Handbook Section 4.6.2
FDOT Specification Section 460
Units: EA

Section 00640-1004 Welded Flange Cover Plate
This work consists of welding a bottom flange cover plate to an existing beam. For estimating, use a

5/ 8”x12” plate with continuous 5/ 16” E70 fillet welds on each side. The welds are overhead and must be completed in a stitched pattern to prevent heat deformation. Use ASTM A-709 Grade 50 steel and include cleaning and painting costs for the repaired section

References: FDOT Specification Section 460
Units: LF

Section 00640-1005 Welded Shear Doubler Plate
This work consists of welding a shear web doubler plate to an existing beam. For estimating, use a 1/ 2”x24”x2’-0” plate with continuous E70 groove welds on all four sides and (4) 1”∅ plug welds. Use ASTM A-709 Grade 50 steel and include cleaning and painting costs for the repaired section

References: FDOT Specification Section 460
Units: EA

Section 00640-1006 Steel Beam Replacement
This work consists of removing a damaged or inadequate steel beam by cutting the beam just below the top flange, then welding a new T-section to the existing embedded flange. Costs for this section only include the beam replacement. Do not include costs for jacking the superstructure, bearings, or cross-bracing. For estimating, use a W27x94x60’ long, AASHTO M270 (ASTM A709), Grade 50 beam with the top flange removed.

References: FDOT Maintenance Handbook Section 4.6.4
FDOT Specification Section 460 and 110-9
Units: EA

Timber Stringer Repair & Replacement Section 00650-1000

Section 00650-1001 Add Timber Stringer (6”x12”x16’)
This work consists of adding a new timber stringer adjacent to an existing stringer. A 24” long x 6” deep wedge is cut out of the top of one end and 3”x3” chamfers are cut on the other end. The superstructure adjacent to the beam is lifted and the new stringer is lifted and slid into final position. The cut wedge is glued back into position using West System Six10 epoxy and nailed into position prior to lowering the deck and removing the jacks. All field cuts are treated.

References: FDOT Maintenance Handbook Section 4.7.2.A
FDOT Specification Section 470
Manufacturer’s Written Instructions
Units: EA

Section 00650-1002 Replace Timber Stringer (6”x12”x16’)
This work consists of removing and disposing of an existing timber and adding a new timber stringer as detailed in Section 00650-1001.

References: FDOT Maintenance Handbook Section 4.7.2.A
FDOT Specification Section 470 and 110-9
Units: EA

Section 00650-1003 Timber Stringer Splice (steel)
This work consists of splicing two sections of timber together or spanning over a damaged section using steel plates on each side of the stringer and through bolts to connect the members together. Prior to performing the work, loads shall be removed from the stringer by eliminating traffic loads and jacking on each side to lift the ends approximately ¼". For estimating, use (2) ASTM A36 plates ¼"x10"x3'-3" with (12) A307 or A36 0.625"∅ x 8" long timber bolts. All plates and hardware shall be galvanized.

References: FDOT Specification Section 470
Units: EA

Section 00650-1004 Timber Stringer Splice (timber)
This work consists of splicing two sections of timber together or spanning over a damaged section using timber sections placed on each side of the stringer and through bolts to connect the members together. Prior to performing the work, loads shall be removed from the stringer by eliminating traffic loads and jacking on each side to lift the ends approximately ¼". For estimating, use (2) 3"x12"x4'-0" timbers with (12) A307 or A36 0.625"∅ x 14" long timber bolts. The timber shall be treated and all hardware shall be galvanized.

References: FDOT Specification Section 470
Units: EA

Section 00650-1005 Timber Stringer Scab (steel)
This work consists of adding a steel plate to one side of a timber stringer to increase capacity or prevent splitting. Prior to performing the work, loads shall be removed from the stringer by eliminating traffic loads and jacking on each side to lift the ends approximately ¼". For estimating, use (1) ASTM A36 plate ¼"x10"x6'-0" with (13) A36 0.375"∅ x 3" long timber lag bolts at 6" on center staggered. All plates and hardware shall be galvanized.

References: FDOT Specification Section 470
Units: EA

Section 00650-1006 Timber Stringer Scab (timber)
This work consists of adding a timber scab to one side of a timber stringer to increase capacity or prevent splitting. Prior to performing the work, loads shall be removed from the stringer by eliminating traffic loads and jacking on each side to lift the ends approximately ¼". For estimating, use (1) 3"x12"x6'-0" timber with (13) A36 0.375"∅ x 6" long timber lag bolts at 6" on center staggered. The timber shall be treated and all hardware shall be galvanized.

References: FDOT Specification Section 470
Units: EA

Section 00650-1007 Timber Stringer Clamping
This work consists of adding a steel plate below a section of timber stringer and using threaded rods attached to the underside of the concrete deck, on each side of the stringer, to apply a clamping force to arrest crack development in the stringer. The rods are attached to the underside of the deck using

mechanical fasteners approved for overhead connections in cracked concrete. The rods extend down the depth of the stringer and pass through the bottom plate where nuts are used to apply the clamping force. Tighten the nuts enough to put tension in the rods, but do not attempt to close the split or crack. For estimating, use (2) A36 5/ 8”∅ x 14” long threaded rods with a 3”x12’x3/ 8” bottom plate with heavy hex nuts and locking bottom washers. The mechanical fasteners shall be stainless steel with a factored tensile load of 3,000 lbs each. The plate shall be galvanized. Use procedures similar to the referenced detail, but install mechanical anchors instead of through bolts.

References: FDOT Maintenance Handbook Section 4.7.1
Units: EA

Section 00650-1008 Timber Stringer Epoxy Crack Repair
This work consists of repairing a cracked timber stringer by cleaning out the crack to remove any decay and loose wood, applying a wood preservative, then filling the crack with epoxy. Dead loads do not have to be removed from the stringer, but live loads shall be removed while the epoxy cures. Use PC-Wood Guardian by PC-Products or PeneTreat Wood Preservative by Schroeder for the wood preservative. Use West System Six10 Epoxy Adhesive to fill the crack. For estimating purposes, use a crack that is ½” wide x 1½” deep.

References: Manufacturer’s Written Instructions
Units: LF

Section 00650-1009 Timber Stringer Epoxy Section Build-Up
This work consists of repairing a damaged or decayed section of a timber stringer by cleaning the damaged area to remove any decay and loose wood, applying a wood preservative, then replacing the missing section with epoxy. Jack up the superstructure on each side of the stringer to remove all loads while the epoxy cures. Use PC-Wood Guardian by PC-Products or PeneTreat Wood Preservative by Schroeder for the wood preservative. Use West System 105 Epoxy Resin with type 404 high density filler for the epoxy.

References: Manufacturer’s Written Instructions
Units: CF

Section 00650-1010 Timber Superstructure Treating
This work consists of materials and labor for cleaning timber stringers to remove all dirt, algae, and debris, and applying a wood preservative. Use PC-Wood Guardian by PC-Products, PeneTreat Wood Preservative by Schroeder or other similar approved products for the wood preservative. Use a 6”x12” stringer for estimating.

References: Manufacturer’s Written Instructions
Units: LF

Section 00650-1011 Timber Superstructure Sealing
This work consists of materials and labor to apply a water repellent to a timber stringer. Use Cabot S.P.F. 48 or a similar approved product for the water repellent. Use a 6”x12” stringer for estimating.

References: Manufacturer’s Written Instructions

Units: LF

Section 00650-1012 Timber Stringer (6”x12”x16’) Material Only
Include the material cost of (1) 6”x12”x16’ timber stringer. This cost is to be used to replace a stringer that has been removed as part of a pile replacement and found to be deteriorated beyond acceptable limits for re-use. Costs for placing the new stringer are included in the cost of the pile replacement.

References: FDOT Specification Section 470
Units: EA

Substructure Repair Section 00700

Concrete Substructure Maintenance & Repair Section 00710-1000

Section 00710-1001 Cleaning Concrete Substructure Elements
This work consists of cleaning pile caps, piles, columns, and walls using water and air spraying equipment at pressures high enough to remove dirt and debris without damage to concrete. In addition to washing, mechanically clean areas with hand tools as required. Water used shall meet the requirements of the FDOT Specifications.

References: FDOT Maintenance Handbook Section 5.1.3
FDOT Specifications Section 923
Units: SF

Section 00710-1002 Crack Repair (epoxy injection)(above water)
This work consists of preparing the surface and sealing the crack according to the manufacturer’s written instructions for the approved material. Consider a 0.024” wide x 2” deep crack for estimating purposes.

References: FDOT Maintenance Handbook Section 4.5.1
FDOT Specification Section 411
Units: LF

Section 00710-1003 Crack Repair (penetrant sealer)
This work consists of preparing the surface and sealing the crack according to the manufacturer’s written instructions for the approved material. Consider a 0.011” wide x 2” deep crack for estimating purposes.

References: FDOT Maintenance Handbook Section 4.5.1
FDOT Specification Section 413
Units: LF

Section 00710-1004 Crack Repair (cementitious, vertical)
This work consists of preparing the surface and repairing the concrete defect using a material for predominantly vertical or overhead repairs that meets the requirements of the Specifications. Follow

all manufacturer's written instruction for repair procedures.

References: FDOT Specification Section 930
FDOT Maintenance Handbook Section 5.4, 5.5, & 5.14.1
Units: CF

Section 00710-1005 Crack Repair (cementitious, horizontal)
This work consists of preparing the surface and repairing the concrete defect using a material for predominantly horizontal repairs that meets the requirements of the Specifications. Follow all manufacturer's written instruction for repair procedures.

References: FDOT Specification Section 930
FDOT Maintenance Handbook Section 5.4, 5.5, 5.14.1
Units: CF

Section 00710-1006 Concrete Substructure Repair Miscellaneous Reinforcing
This work consists of the material and labor required to place steel reinforcing for concrete substructure repairs.

References: FDOT Specification Section 415
Units: LB

Section 00710-1007 Drill & Epoxy Grout Substructure Reinforcing
This work consists of preparing a hole and epoxy grouting reinforcing steel as part of a concrete substructure repair. This section includes the cost of epoxy material and labor for anchoring a reinforcing bar. The reinforcing steel is not included here. Use an epoxy meeting the requirements of the Specifications. Use a 25.75" embedment and a 1.5"∅ hole for grouting a #10 bar for estimating purposes.

References: FDOT Specification Section 416
Units: EA

Section 00710-1008 Carbon Fiber Reinforcing
This work consists of preparing the concrete surface and attaching a carbon fiber laminate for structural strengthening or repair. Use Sika CarboDur Type S 1012 laminate along with Sikadur 30 epoxy resin. Follow all manufacturer's written instructions for installation. The laminate strips may be installed vertically along the sides of a concrete cap beam and wrapped around the bottom or they may be installed along the bottom of the cap beam. Do not include the cost of concrete surface repairs that may be needed prior to applying the laminate.

References: Sika CarboDur Product Data Sheet
Units: LF

Section 00710-1009 Temporary Support for Pile Cap Repair
This work consists of installing a temporary steel support to transfer pile cap loads directly to a pile when unsound concrete has to be removed in the vicinity of the pile. The cost includes all material and labor to install the support, then remove it and grout the bolt holes after repairs are completed.

References: FDOT Maintenance Handbook Section 5.5.2
Units: EA

Section 00710-1010 Prestressed Tendon Splicing (GRABB-IT) (1/2" strand)
This work consists of repairing a broken ½"∅ prestressed tendon in a damaged concrete pile using a Grabb-It splice assembly manufactured by Prestress Supply, Inc. For estimating purposes, consider a 4' long section of strand to be damaged and include costs for a 4' long section of ½" ∅, 270 ksi low-relaxation strand and a splice chuck.

References: FDOT Maintenance Handbook Section 4.5.3
Units: EA

Section 00710-1011 Sealing Concrete Substructures (penetrant sealer)
This work consists of preparing and sealing concrete substructures according to the Specifications. This section includes cleaning in the preparation but does not include any concrete repair. Use a penetrant sealer listed on the FDOT QPL. The sealer is applied over the entire surface of the substructure.

References: FDOT Maintenance Handbook Section 4.5.3 & 5.1.1
FDOT Specification Section 413
Units: SF

Section 00710-1012 Reinforced Concrete Pile Jacket (14" square pile)
This work consists of the materials and labor required to install a concrete pile jacket for a 14" square pile. Use a concrete mix meeting the requirements for special fillers in the Specifications. Consider the pile to have cathodic protection. Use a 6' deep jacket for estimating the average price per LF.

References: FDOT Specification Section 930-7 & SP 457
FDOT Maintenance Handbook Section 5.3.1
Units: LF

Section 00710-1013 Reinforced Concrete Pile Jacket (18" square pile)
This work consists of the materials and labor required to install a concrete pile jacket for an 18" square pile. Use a concrete mix meeting the requirements for special fillers in the Specifications. Consider the pile to have cathodic protection. Use a 6' deep jacket for estimating the average price per LF.

References: FDOT Specification Section 930-7 & SP 457
FDOT Maintenance Handbook Section 5.3.1
Units: LF

Section 00710-1014 Reinforced Concrete Pile Jacket (24" square pile)
This work consists of the materials and labor required to install a concrete pile jacket for an 24" square pile. Use a concrete mix meeting the requirements for special fillers in the Specifications. Consider the pile to have cathodic protection. Use a 6' deep jacket for estimating the average price per LF.

References: FDOT Specification Section 930-7 & SP 457

FDOT Maintenance Handbook Section 5.3.1
Units: LF

Section 00710-1015 Fiberglass Pile Jacket Type 1 (14" square pile)
This work consists of the materials and labor required to install a fiberglass waterline pile jacket with epoxy grout filler for a 14" square pile. Use an epoxy grout meeting the requirements for special fillers in the Specifications. Consider the pile to have cathodic protection. For estimating, extend the jacket 7'-0" above the M.L.W. elevation to determine the average price per LF.

References: FDOT Specification Section 930-7 & SP 457
FDOT Maintenance Handbook Section 5.3.2
Manufacturer's Written Instructions
Units: LF

Section 00710-1016 Fiberglass Pile Jacket Type 1 (18" square pile)
This work consists of the materials and labor required to install a fiberglass waterline pile jacket with epoxy grout filler for an 18" square pile. Use an epoxy grout meeting the requirements for special fillers in the Specifications. Consider the pile to have cathodic protection. For estimating, extend the jacket 7'-0" above the M.L.W. elevation to determine the average price per LF.

References: FDOT Specification Section 930-7 & SP 457
FDOT Maintenance Handbook Section 5.3.2
Manufacturer's Written Instructions
Units: LF

Section 00710-1017 Fiberglass Pile Jacket Type 1 (24" square pile)
This work consists of the materials and labor required to install a fiberglass waterline pile jacket with epoxy grout filler for a 24" square pile. Use an epoxy grout meeting the requirements for special fillers in the Specifications. Consider the pile to have cathodic protection. For estimating, extend the jacket 7'-0" above the M.L.W. elevation to determine the average price per LF.

References: FDOT Specification Section 930-7 & SP 457
FDOT Maintenance Handbook Section 5.3.2
Manufacturer's Written Instructions
Units: LF

Section 00710-1018 Fiberglass Pile Jacket Type 2 (18" square pile)
This work consists of the materials and labor required to install a fiberglass waterline pile jacket with cement filler for an 18" square pile. Use a concrete mix meeting the requirements for special fillers in the Specifications. Consider the pile to have cathodic protection. For estimating, extend the jacket 7'-0" above the M.L.W. elevation to determine the average price per LF.

References: FDOT Specification Section 930-7 & SP 457
FDOT Maintenance Handbook Section 5.3.2
Manufacturer's Written Instructions
Units: LF

Section 00710-1019 Fiberglass Pile Jacket Type 3 (18" square pile)
This work consists of the materials and labor required to install a fiberglass mudline pile jacket with epoxy grout filler for an 18" square pile. Use an epoxy that meets the requirements for special fillers in the Specifications. Consider the pile to have cathodic protection. For estimating, extend the jacket 7'-0" above the M.L.W. elevation to determine the average price per LF.

References: FDOT Specification Section 930-7 & SP 457
FDOT Maintenance Handbook Section 5.3.2
Manufacturer's Written Instructions
Units: LF

Section 00710-1020 Fiberglass Pile Jacket Type 4 (18" square pile)
This work consists of the materials and labor required to install a fiberglass mudline pile jacket with cement filler for an 18" square pile. Use a concrete mix that meets the requirements for special fillers in the Specifications. Consider the pile to have cathodic protection. For estimating, extend the jacket 7'-0" above the M.L.W. elevation to determine the average price per LF.

References: FDOT Specification Section 930-7 & SP 457
FDOT Maintenance Handbook Section 5.3.2
Manufacturer's Written Instructions
Units: LF

Section 00710-1021 Fiberglass Pile Jacket Type 5 (18" square pile)
This work consists of the materials and labor required to install a fiberglass waterline pile jacket with reinforced concrete filler for an 18" square pile. Use a concrete mix that meets the requirements for special fillers in the Specifications. Consider the pile to have cathodic protection. For estimating, extend the jacket 7'-0" above the M.L.W. elevation to determine the average price per LF.

References: FDOT Specification Section 930-7 & SP 457
FDOT Maintenance Handbook Section 5.3.2
Manufacturer's Written Instructions
Units: LF

Section 00710-1022 Fiberglass Pile Jacket Type 6 (18" square pile)
This work consists of the materials and labor required to install a fiberglass mudline pile jacket with reinforced concrete filler for an 18" square pile. Use a concrete mix that meets the requirements for special fillers in the Specifications. Consider the pile to have cathodic protection. For estimating, extend the jacket 7'-0" above the M.L.W. elevation to determine the average price per LF.

References: FDOT Specification Section 930-7 & SP 457
FDOT Maintenance Handbook Section 5.3.2
Manufacturer's Written Instructions
Units: LF

Section 00710-1023 Corrugated Metal Pipe Pile Jacket (18" square pile)
This work consists of the materials and labor required to install a corrugated metal pipe mudline pile jacket with concrete filler for an 18" square pile. Use a concrete mix that meets the requirements for

special fillers in the Specifications. Consider the pile to have cathodic protection. For estimating, use a 7'-0" water depth to determine the average price per LF.

References: FDOT Specification Section 930-7 & SP 457
FDOT Maintenance Handbook Section 5.3.3
Units: LF

Section 00710-1024 Fabric Pile Jacket (18" square pile)
This work consists of the materials and labor required to install a fabric waterline pile jacket with concrete filler for an 18" square pile. Use a concrete mix that meets the requirements for special fillers in the Specifications. Consider the pile to have cathodic protection. For estimating, use a 7'-0" jacket length to determine the average price per LF.

References: FDOT Specification Section 930-7 & SP 457
FDOT Maintenance Handbook Section 5.3.4
Manufacturer's Written Instructions
Units: LF

Section 00710-1025 Fabric Pile Jacket (24" square pile)
This work consists of the materials and labor required to install a fabric waterline pile jacket with concrete filler for a 24" square pile. Use a concrete mix that meets the requirements for special fillers in the Specifications. Consider the pile to have cathodic protection. For estimating, use a 7'-0" jacket length to determine the average price per LF.

References: FDOT Specification Section 930-7 & SP 457
FDOT Maintenance Handbook Section 5.3.4
Manufacturer's Written Instructions
Units: LF

Section 00710-1026 Sacrificial Cathodic Protection (Reinforced Concrete)
This work consists of the materials and labor required to install a zinc cathodic protection system on a reinforced concrete pile. Costs for this section include the installation of the cathodic protection system but do not include costs for the pile jacket. Include costs for an electrical continuity test.

References: FDOT Maintenance Handbook Section 5.3.5.A
Units: EA

Section 00710-1027 Sacrificial Cathodic Protection (Prestressed Concrete)
This work consists of the materials and labor required to install a zinc cathodic protection system on a prestressed concrete pile. Costs for this section include the installation of the cathodic protection system but do not include costs for the pile jacket. Include costs for an electrical continuity test.

References: FDOT Maintenance Handbook Section 5.3.5.B
Units: EA

Section 00710-1028 Impressed Current Cathodic Protection Pile Jacket (Reinforced Concrete)
This work consists of the materials and labor required to install an impressed current cathodic

protection system pile jacket on a reinforced concrete pile. Include costs for an electrical continuity test.

References: FDOT Maintenance Handbook Section 5.3.6.A
Units: EA

Section 00710-1029 Impressed Current Cathodic Protection Pile Jacket (Prestressed Concrete)
This work consists of the materials and labor required to install an impressed current cathodic protection system pile jacket on a prestressed concrete pile. Include costs for an electrical continuity test.

References: FDOT Maintenance Handbook Section 5.3.6.B
Units: EA

Section 00710-1030 Concrete Cathodic Protection (small)
This work consists of labor and materials to clamp 7 pound zinc anodes to reinforced concrete piles below the waterline to abate pile corrosion. Include costs for placing (4) anodes.

References: FDOT Maintenance Handbook Section 5.2.1.B
Units: EA

Section 00710-1031 Underwater Epoxy Crack Repair (pressure injection)
This work consists of preparing the surface and sealing the crack according to the manufacturer's written instructions for the approved material. Consider a 0.024" wide x 2" deep crack for estimating purposes.

References: FDOT Maintenance Handbook Section 5.15.2
FDOT Specification Section 411
Units: LF

Section 00710-1032 Underwater Concrete Repair
This work consists of removing damaged/ contaminated concrete and rust then patching the resulting void in underwater concrete structures. Use forms designed for underwater use and pump the concrete into the proper position. Use a concrete mix that meets the requirements for special fillers in the Specifications.

References: FDOT Maintenance Handbook Section 5.15.3
FDOT Specification Section 930-7
Units: CY

Steel Substructure Maintenance & Repair Section 00720-1000

Section 00720-1001 Cleaning & Painting Steel Substructure (oil base)
This work consists of cleaning steel pile caps, piles, and bracing, then painting these members with an oil base paint listed on the FDOT QPL in accordance with FDOT Specification Section 560 & 561. Does not include costs for the removal of lead based paint. Water used shall meet the requirements of the

FDOT Specifications.

References: FDOT Specifications Section 560, 561 & 923
Units: SF

Section 00720-1002 Cleaning & Painting Steel Substructure (coal-tar epoxy)
This work consists of cleaning steel pile caps, piles, and bracing, then coating these members with a coal-tar epoxy listed on the FDOT QPL in accordance with FDOT Specification Section 560 & 561. Does not include costs for the removal of lead based paint. Water used shall meet the requirements of the FDOT Specifications.

References: FDOT Specifications Section 560, 561 & 923
Units: SF

Section 00720-1003 Reinforced Concrete Pile Jacket (steel H-pile)
This work consists of the materials and labor required to install a concrete pile jacket around a steel H-pile (12”-14”). Use a concrete mix meeting the requirements for special fillers in the Specifications. Consider the pile to have cathodic protection. Use the detail in the Handbook and replace the concrete pile shown with an H-pile. Use an average 6’ deep jacket for estimating the price per LF.

References: FDOT Specification Section 930-7 & SP 457
FDOT Maintenance Handbook Section 5.3.1
Units: LF

Section 00720-1004 Fiberglass Pile Jacket Type 7 (steel H-pile)
This work consists of the materials and labor required to install a fiberglass waterline pile jacket with cement filler for a steel H-pile (12”-14”). Use a concrete mix meeting the requirements for special fillers in the Specifications. Consider the pile to have cathodic protection. For estimating, consider the average jacket to extend 7’-0” above the M.L.W. elevation for determining the price per LF.

References: FDOT Specification Section 930-7 & SP 457
FDOT Maintenance Handbook Section 5.3.2.G
Manufacturer’s Written Instructions
Units: LF

Section 00720-1005 Fiberglass Pile Jacket Type 8 (steel H-pile)
This work consists of the materials and labor required to install a fiberglass mudline pile jacket with cement filler for a steel H-pile (12”-14”). Use a concrete mix meeting the requirements for special fillers in the Specifications. Consider the pile to have cathodic protection. For estimating, extend the jacket 7’-0” above the M.L.W. elevation for determining the average price per LF.

References: FDOT Specification Section 930-7 & SP 457
FDOT Maintenance Handbook Section 5.3.2.G
Manufacturer’s Written Instructions
Units: LF

Section 00720-1006 Corrugated Metal Pipe Pile Jacket (steel H-pile)
This work consists of the materials and labor required to install a corrugated metal pipe mudline pile jacket with concrete filler for a steel H-pile (12”-14”). Use a concrete mix that meets the requirements for special fillers in the Specifications. Consider the pile to have cathodic protection. For estimating, use a 7’-0” water depth to determine the average price per LF.

References: FDOT Specification Section 930-7 & SP 457
FDOT Maintenance Handbook Section 5.3.3
Units: LF

Section 00720-1007 Fabric Pile Jacket (steel H-pile)
This work consists of the materials and labor required to install a fabric waterline pile jacket with concrete filler for a steel H-pile (12”-14”). Use a concrete mix that meets the requirements for special fillers in the Specifications. Consider the pile to have cathodic protection. For estimating, use a 7’-0” jacket length for determining the average price per LF.

References: FDOT Specification Section 930-7 & SP 457
FDOT Maintenance Handbook Section 5.3.4
Manufacturer’s Written Instructions
Units: LF

Section 00720-1008 Cathodic Protection (small)(steel pile)
This work consists of labor and materials to clamp 7 pound zinc anodes to steel H-piles below the waterline to abate pile corrosion. Include costs for placing (6) anodes.

References: FDOT Maintenance Handbook Section 5.2.1.A
Units: LS

Section 00720-1009 Cathodic Protection (large)(steel pile)
This work consists of labor and materials to clamp zinc or aluminum anodes to steel H-piles below the waterline to abate pile corrosion when more than 8 lineal feet of pile is exposed. Include costs for placing (1) 2”x2”x48” 50 LB zinc tank anode.

References: FDOT Maintenance Handbook Section 5.2.2
Units: EA

Section 00720-1010 Steel Pile Damage Repair (above water)
This work consists of labor and materials to repair a damage steel H-pile above water by bolting channels to the flanges to span over the damaged section. For estimating, use (2) 4’ long C10x15.3 channels and (24)3/ 4”∅ A325 bolts.

References: FDOT Maintenance Handbook Section 5.6
FDOT Specification Section 460
Units: EA

Section 00720-1011 Steel Pile Damage Repair (below water)
This work consists of labor and materials to repair a damage steel H-pile below water by bolting

channels to the flanges to span over the damaged section. For estimating, use (2) 4' long C10x15.3 channels and (24)3/ 4"Ø A325 bolts. Do not include the costs for cathodic protection in this section.

References: FDOT Maintenance Handbook Section 5.6
FDOT Specification Section 460
Units: EA

Section 00720-1012 Steel Supplemental Piles
This work consists of labor and materials to install supplemental piles to strengthen a weak or settled pile bent by cutting holes in the concrete deck, bending back deck reinforcing, driving steel H-piles on each side of the bent, and installing support beams underneath the cap. Piles shall be (2) HP12x84x60' long. Cross beams shall be (1) HP12x84x8' welded with 5/ 16" E70 fillet welds. Cross bracing shall be L4x4x3/ 8x20' total. To load the piles, jack up the superstructure prior to installing shims. Include costs for cutting and repairing the deck, but do not include costs for traffic control.

References: FDOT Maintenance Handbook Section 5.9.1
FDOT Specification Section 455 & 460
Units: EA

Section 00720-1013 Steel Helper Bent
This work consists of labor and materials to install a steel helper bent to strengthen a bent when the deterioration of the piles or loss of bearing is 50% or greater. Estimate the costs to install the example helper bent shown in Appendix A.

References: Appendix A Figures 720-1013-1 to 720-1013-5
FDOT Maintenance Handbook Section 5.9.4
FDOT Specification Section 455 & 460
Units: EA

Timber Substructure Maintenance & Repair Section 00730-1000

Section 00730-1001 Wood Liquid Preservative Surface Treatment
This work consists of field surface treatment to timber piles and pile caps in accordance with AWPA M4, using a copper naphthenate preservative with a minimum of 2.0% copper metal in the solution. The work shall include cleaning the substructure, application of the preservative, and any containment and clean-up processes required to prevent contamination. This section may also be used for treating timber stringers as part of a substructure repair.

References: FDOT Specifications Section 470
Units: SF

Section 00730-1002 Boron Salt Based Liquid Wood Preservative Treatment
This work consists of treating timber with a water based boron salt wood preservative such as PC-Wood Guardian by PC-Products or Penetreat Wood Preservative by Schroeder that is compatible with wood rot hardeners and wood epoxies.

References: Manufacturer's Written Instructions

Units: SF

Section 00730-1003 Liquid Wood Rot Hardener Treatment
This work consists of the applying a low viscosity, structural wood hardener designed to strengthen decayed or rotted wood and seal voids with an epoxy that cures to a strength greater than wood such as PC-Rot Terminator by PC-Products. Use a material with a minimum compressive yield strength of 5,000 psi and a minimum flexural strength of 8,000 psi. The material shall be compatible with wood epoxies.

References: Manufacturer's Written Instructions
Units: GA

Section 00730-1004 Substructure Wood Epoxy Repair
This work consists of cleaning and removing loose deteriorated wood, then applying an epoxy repair to replace the missing section. Use West System 105 Epoxy Resin with type 404 high density filler for the epoxy.

References: Manufacturer's Written Instructions
Units: CF

Section 00730-1005 Wood Epoxy Fiberglass Reinforcing
This work consists of installing a fiberglass reinforcing bar into a pile or pile cap to span over a deficient section by routing out a 1"x2" groove above and below the decay then epoxy grouting the reinforcement into the groove. Use a fiberglass reinforcing bar with a tensile strength of 80,000 psi. Use West System Six10 Epoxy Adhesive or West System 105 Epoxy Resin with type 404 high density filler for the epoxy. For estimating, use a single 5' long bar for installation.

References: Manufacturer's Written Instructions
Units: EA

Section 00730-1006 Timber Pile Cap Replacement (12"x12"x24')
This work consists of replacing a 12"x12"x24' long timber pile cap using the methods described in the Handbook. For estimating, consider a bridge with (5) timber piles at an interior bent.

References: FDOT Maintenance Handbook Section 5.8.1
FDOT Specification Section 470
Units: EA

Section 00730-1007 Timber Pile Cap Scab (timber)
This work consists of adding treated timber cap scabs to each side of a timber pile cap. Use (2) 6"x12"x24' long timber scabs with (48) 4"∅ split-ring connectors and (24) ¾"∅ x 28" long timber through bolts. Hardware shall be galvanized.

References: FDOT Maintenance Handbook Section 5.8.2
FDOT Specification Section 470
Units: EA

Section 00730-1008 Timber Pile Cap Scab (steel)
This work consists of adding steel channels to each side of a timber pile cap. Use (2) C10x15.3 x24' long channels and (24) ¾"∅ x 16" long timber through bolts. All steel shall be galvanized.

References: FDOT Specification Section 460 & 470
Units: EA

Section 00730-1009 Timber Pile Cap Clamping
This work consists of placing a ¾"∅ x 16" long timber bolt vertically through the center of the pile cap to arrest horizontal crack development. Use ogee washers and tighten the bolt enough to tension the bolts, but do not try to close the crack. All hardware shall be galvanized.

References: FDOT Specification Section 460 & 470
Units: EA

Section 00730-1010 Timber Pile Cap Corbel Block (12"x12"x3')
This work consists of removing the load from the pile cap by jacking from the existing piles or from cribbing approximately ¼" up, removing 11.75" from the top of a pile, and placing a treated 12"x12"x3' long timber block on top of the cut pile, then lowering the cap onto the block. Connect the block to the pile with a ¾"∅ x 21" long drift bolt and to the cap using (2) ¾"∅ x 28" long timber through bolts with ogee washers. All hardware shall be galvanized.

References: FDOT Specification Section 460 & 470
Units: EA

Section 00730-1011 Ground Line Timber Pile Splice
This work consists of partial replacement of a deteriorated pile with a new section of treated timber pile from below permanent moisture line to the bottom of the cap. For estimating, use a 10' long section of Class B timber pile. Treat all field cut ends according to the Specifications. Does not include costs for the pile jacket.

References: FDOT Maintenance Handbook Section 5.7.2
FDOT Specification Section 470
Units: EA

Section 00730-1012 Steel Sleeve Timber Pile Splice
This work consists of partial replacement of a deteriorated pile with a new section of treated timber pile and the placement of a steel splice sleeve around the splice. For estimating, use a 10' long section of Class B timber pile. Revise the detail shown in the Handbook to use: a 12"∅ x48" long sleeve comprised of cut and galvanized A36 steel pipe with ½" thick walls, (6) 1" ∅ A307 or A36 steel bolts at 9" on center.

References: FDOT Maintenance Handbook Section 5.7.5
FDOT Specification Section 470
Units: EA

Section 00730-1013 Abutment Timber Pile Splice
This work consists of partial replacement of a deteriorated pile with a new section of treated timber pile at an abutment using the detail shown in Figure 730-1013-1 located in Appendix A.

References: FDOT Maintenance Handbook Section 5.7
FDOT Specification Section 470
Appendix A Figure 730-1013-1
Units: EA

Section 00730-1014 Reinforced Concrete Pile Jacket (12" dia. timber)
This work consists of the materials and labor required to install a concrete pile jacket around a 12"∅ timber pile. Use a concrete mix meeting the requirements for special fillers in the Specifications. Replace the concrete pile shown in the detail with a round timber pile. Use a 6' jacket length to determine the average price per LF.

References: FDOT Specification Section 930-7 & SP 457
FDOT Maintenance Handbook Section 5.3.1
Units: LF

Section 00730-1015 Fiberglass Pile Jacket Type 1 (12" dia. timber)
This work consists of the materials and labor required to install a fiberglass waterline pile jacket with epoxy grout filler for a round 12"∅ timber pile. Use an epoxy grout meeting the requirements for special fillers in the Specifications. For estimating, extend the jacket 7'-0" above the M.L.W. elevation to determine the average price per LF.

References: FDOT Specification Section 930-7 & SP 457
FDOT Maintenance Handbook Section 5.3.2
Manufacturer's Written Instructions
Units: LF

Section 00730-1016 Fiberglass Pile Jacket Type 2 (12" dia. timber)
This work consists of the materials and labor required to install a fiberglass waterline pile jacket with cement filler for a 12"∅ timber pile. Use a concrete mix meeting the requirements for special fillers in the Specifications. For estimating, extend the jacket 7'-0" above the M.L.W. elevation to determine the average price per LF.

References: FDOT Specification Section 930-7 & SP 457
FDOT Maintenance Handbook Section 5.3.2
Manufacturer's Written Instructions
Units: LF

Section 00730-1017 Fiberglass Pile Jacket Type 3 (12" dia. timber)
This work consists of the materials and labor required to install a fiberglass mudline pile jacket with epoxy grout filler for a 12"∅ timber pile. Use an epoxy that meets the requirements for special fillers in the Specifications. For estimating, extend the jacket 7'-0" above the M.L.W. elevation to determine the average price per LF.

References: FDOT Specification Section 930-7 & SP 457
FDOT Maintenance Handbook Section 5.3.2
Manufacturer's Written Instructions
Units: LF

Section 00730-1018 Fiberglass Pile Jacket Type 4 (12" dia. timber)
This work consists of the materials and labor required to install a fiberglass mudline pile jacket with cement filler for a 12"∅ timber pile. Use a concrete mix that meets the requirements for special fillers in the Specifications. For estimating, extend the jacket 7'-0" above the M.L.W. elevation to determine the average price per LF.

References: FDOT Specification Section 930-7 & SP 457
FDOT Maintenance Handbook Section 5.3.2
Manufacturer's Written Instructions
Units: LF

Section 00730-1019 Fiberglass Pile Jacket Type 5 (12" dia. timber)
This work consists of the materials and labor required to install a fiberglass waterline pile jacket with reinforced concrete filler for a 12"∅ timber pile. Use a concrete mix that meets the requirements for special fillers in the Specifications. For estimating, extend the jacket 7'-0" above the M.L.W. elevation to determine the average price per LF.

References: FDOT Specification Section 930-7 & SP 457
FDOT Maintenance Handbook Section 5.3.2
Manufacturer's Written Instructions
Units: LF

Section 00730-1020 Fiberglass Pile Jacket Type 6 (12" dia. timber)
This work consists of the materials and labor required to install a fiberglass mudline pile jacket with reinforced concrete filler for a 12"∅ timber pile. Use a concrete mix that meets the requirements for special fillers in the Specifications. For estimating, extend the jacket 7'-0" above the M.L.W. elevation to determine the average price per LF.

References: FDOT Specification Section 930-7 & SP 457
FDOT Maintenance Handbook Section 5.3.2
Manufacturer's Written Instructions
Units: LF

Section 00730-1021 Corrugated Metal Pipe Pile Jacket (12" dia. timber)
This work consists of the materials and labor required to install a corrugated metal pipe mudline pile jacket with concrete filler for a 12"∅ timber pile. Use a concrete mix that meets the requirements for special fillers in the Specifications. For estimating, use a 7'-0" water depth to determine the average price per LF.

References: FDOT Specification Section 930-7 & SP 457
FDOT Maintenance Handbook Section 5.3.3
Units: LF

Section 00730-1022 Fabric Pile Jacket (12" dia. timber)
This work consists of the materials and labor required to install a fabric waterline pile jacket with concrete filler for a 12"∅ timber pile. Use a concrete mix that meets the requirements for special fillers in the Specifications. For estimating, use a 7'-0" jacket length to determine the average price per LF.

References: FDOT Specification Section 930-7 & SP 457
FDOT Maintenance Handbook Section 5.3.4
Manufacturer's Written Instructions
Units: LF

Section 00730-1023 Sikadur Pile Restoration System (12" dia. timber)
This work consists of installing a fiberglass reinforced plastic, FRP, mudline pile jacket with epoxy filler for a 12"∅ timber pile. Use the details for "Scenario 2, Wet (submerged marine environment)" as shown in Sika's product literature. Include (8) 3/ 8"∅ CarboDur rods. Extend the jacket 3'-0" into the mudline and use a 7'-0" total jacket length. For estimating, use 1/ 3 of pile missing/ damaged within jacket length.

References: FDOT Maintenance Handbook Section 5.3.2
Manufacturer's Written Instructions
Units: EA

Section 00730-1024 Timber Pile Wedge Section Restoration
This work consists of supporting the cap to relieve load from a defective pile, cutting out a wedge shaped section of deterioration from the pile, field treating the open area, then epoxy grouting a treated wedge shaped replacement section. Use PC-Wood Guardian by PC-Products or PeneTreat Wood Preservative by Schroeder for the wood preservative and West System Six10 epoxy. For estimating, use a 3' long 45° wedge with a 6" radius.

References: FDOT Specification Section 470
Manufacturer's Written Instructions
Units: EA

Section 00730-1025 Timber Pile, 30' Class B (cap support)
This work consists of installing a new 30' long timber pile adjacent to a defective pile as described in the Handbook. Use (2) A36 strap plates 3/ 8"x4"x24" with (4) ¾"∅ x 16" A307 or A36 timber through bolts to connect to the cap. All hardware will be galvanized. Include costs for removing a timber stringer to provide room to drive the pile by saw-cutting the concrete deck, chipping out the concrete to expose deck reinforcing, bending back the reinforcing, and removing the stringer. Include the costs of replacing the timber stringer and repairing the void by bending the reinforcing back into position, adding lap splice bars, and casting Class II (bridge deck) concrete. Include costs to remove attached sway bracing and re-attach the bracing following pile installation. All cut sections shall be field treated according to the Specifications. Include costs for treating the pile cap section and stringer ends according to Section 00730-1001 of this Guide. For estimating, use a 30" wide x 16' long section to be removed with an 8" thick concrete slab and #5 bars at 6" top and bottom.

References: FDOT Maintenance Handbook Section 5.7.1

FDOT Specification Section 346, 455 & 470
Units: EA

Section 00730-1026 Timber Pile, 40' Class B (cap support)
This work consists of installing a new 40' long timber pile adjacent to a defective pile as described in the Handbook. Use (2) A36 strap plates 3/ 8"x4"x24" with (4) ¾"∅ x 16" A307 or A36 timber through bolts to connect to the cap. All hardware will be galvanized. Include costs for removing a timber stringer to provide room to drive the pile by saw-cutting the concrete deck, chipping out the concrete to expose deck reinforcing, bending back the reinforcing, and removing the stringer. Include the costs of replacing the timber stringer and repairing the void by bending the reinforcing back into position, adding lap splice bars, and casting Class II (bridge deck) concrete. Include costs to remove attached sway bracing and re-attach the bracing following pile installation. All cut sections shall be field treated according to the Specifications. Include costs for treating the pile cap section and stringer ends according to Section 00730-1001 of this Guide. For estimating, use a 30" wide x 16' long section to be removed with an 8" thick concrete slab and #5 bars at 6" top and bottom.

References: FDOT Maintenance Handbook Section 5.7.1
FDOT Specification Section 346, 455 & 470
Units: EA

Section 00730-1027 Timber Pile, 50' Class B (cap support)
This work consists of installing a new 50' long timber pile adjacent to a defective pile as described in the Handbook. Use (2) A36 strap plates 3/ 8"x4"x24" with (4) ¾"∅ x 16" A307 or A36 timber through bolts to connect to the cap. All hardware will be galvanized. Include costs for removing a timber stringer to provide room to drive the pile by saw-cutting the concrete deck, chipping out the concrete to expose deck reinforcing, bending back the reinforcing, and removing the stringer. Include the costs of replacing the timber stringer and repairing the void by bending the reinforcing back into position, adding lap splice bars, and casting Class II (bridge deck) concrete. Include costs to remove attached sway bracing and re-attach the bracing following pile installation. All cut sections shall be field treated according to the Specifications. Include costs for treating the pile cap section and stringer ends according to Section 00730-1001 of this Guide. For estimating, use a 30" wide x 16' long section to be removed with an 8" thick concrete slab and #5 bars at 6" top and bottom.

References: FDOT Maintenance Handbook Section 5.7.1
FDOT Specification Section 346, 455 & 470
Units: EA

Section 00730-1028 Timber Pile, 30' Class B (wing wall)
This work consists of installing a new 30' long timber pile adjacent to a defective wing wall pile.

References: FDOT Specification Section 455 & 470
Units: EA

Section 00730-1029 Timber Pile, 40' Class B (wing wall)
This work consists of installing a new 40' long timber pile adjacent to a defective wing wall pile.

References: FDOT Specification Section 455 & 470

Units: EA

Section 00730-1030 Timber Pile, 50' Class B (wing wall)
This work consists of installing a new 40' long timber pile adjacent to a defective wing wall pile.

References: FDOT Specification Section 455 & 470
Units: EA

Section 00730-1031 Replace Timber Sway Bracing (3"x10"x26')
This work consists of replacing a timber sway brace with a treated 3"x10"x26' long timber connected to (5) timber piles with (1) ¾"∅ x 22" long timber through bolt with ogee washers in each pile. Include costs for removing and disposing of the existing brace. All hardware shall be galvanized.

References: FDOT Specification Section 470
Units: EA

Section 00730-1032 Temporary Dewatering, Interior Bent, 4' Deep
This work consists of providing a temporary cofferdam and de-watering system to allow ground line construction activities at an interior bent. The temporary cofferdam must extend around the interior bent and displace moving water that is 4' deep. Products such as Aqua-Barrier, AquaDam, Portadam or other proprietary systems or a Contractor designed system may be used, but all systems must meet OSHA safety standards. For estimating, consider the water depth to include the depth of muck below the bottom of the water.

References: Manufacturer's Written Instructions
Units: LF/ Day

Section 00730-1033 Temporary Dewatering, Interior Bent, 8' Deep
This work consists of providing a temporary cofferdam and de-watering system to allow ground line construction activities at an interior bent. The temporary cofferdam must extend around the interior bent and displace moving water that is 8' deep. Products such as Aqua-Barrier, AquaDam, Portadam or other proprietary systems or a Contractor designed system may be used, but all systems must meet OSHA safety standards. For estimating, consider the water depth to include the depth of muck below the bottom of the water.

References: Manufacturer's Written Instructions
Units: LF/ Day

Section 00730-1034 Temporary Dewatering, Interior Bent, 12' Deep
This work consists of providing a temporary cofferdam and de-watering system to allow ground line construction activities at an interior bent. The temporary cofferdam must extend around the interior bent and displace moving water that is 12' deep. Products such as Aqua-Barrier, AquaDam, Portadam or other proprietary systems or a Contractor designed system may be used, but all systems must meet OSHA safety standards. For estimating, consider the water depth to include the depth of muck below the bottom of the water.

References: Manufacturer's Written Instructions

Units: LF/ Day

Abutment & Approach Repair Section 00800

Abutment & Wingwall Repair Section 00810-1000

Section 00810-1001 Replace Backwall Timbers (3”x10”x6’)
This work consists of replacing a deteriorated backwall timber between piles. The existing timber is removed between piles, a new timber is wedged into position behind the pile edges, and the void area behind the plank is grouted with an excavatable flowable fill or grout. Wedges shall be treated and nailed into place with 16d galvanized nails. All field cuts shall be treated with a copper naphthenate preservative containing 2% minimum copper metal. Include costs for removing and disposing of the existing member. Do not include costs for grouting voids in this section.

References: FDOT Specifications Section 470
Units: EA

Section 00810-1002 Replace Backwall Timbers (3”x10”x24’)
This work consists of replacing a deteriorated full length backwall timber plank. The existing timber is removed, a new timber is slid into position from the side behind the piles, and the void area behind the plank is grouted with an excavatable flowable fill or grout. Nail the plank into place with 16d galvanized nails. All field cuts shall be treated with a copper naphthenate preservative containing 2% minimum copper metal. Include costs for removing and disposing of the existing member. Do not include costs for grouting voids in this section.

References: FDOT Specifications Section 470
Units: EA

Section 00810-1003 Replace Wingwall Timbers (3”x10”x6’)
This work consists of replacing a deteriorated wingwall timber between piles. The existing timber is removed between piles, a new timber is wedged into position behind the pile edges, and the void area behind the plank is grouted with an excavatable flowable fill or grout. Alternatively, the fill behind the wall may be excavated to expose the void and proper backfill be placed. Wedges shall be treated and nailed into place with 16d galvanized nails. All field cuts shall be treated with a copper naphthenate preservative containing 2% minimum copper metal. Include costs for removing and disposing of the existing member. Do not include costs for grouting voids in this section.

References: FDOT Specifications Section 470
Units: EA

Section 00810-1004 Replace Wingwall Timbers (3”x10”x16’)
This work consists of replacing a deteriorated full length wingwall timber plank. The existing timber is removed, a new timber is slid into position behind the piles, and the void area behind the plank is grouted with an excavatable flowable fill or grout. Alternatively, the fill behind the wall may be excavated to expose the void and proper backfill be placed. The plank shall be nailed into place with

16d galvanized nails. All field cuts shall be treated with a copper naphthenate preservative containing 2% minimum copper metal. Include costs for removing and disposing of the existing member. Do not include costs for grouting voids in this section.

References: FDOT Specifications Section 470
Units: EA

Section 00810-1005 Temporary Dewatering, Abutment, 4' Deep
This work consists of providing a temporary cofferdam and de-watering system to allow ground line construction activities at an abutment. The temporary cofferdam must extend around the length and sides of the abutment and displace moving water that is 4' deep. Products such as Aqua-Barrier, AquaDam, Portadam or other proprietary systems or a Contractor designed system may be used, but all systems must meet OSHA safety standards. For estimating, consider the water depth to include the depth of muck below the bottom of the water.

References: Manufacturer's Written Instructions
Units: LF/ Day

Section 00810-1006 Temporary Dewatering, Abutment, 8' Deep
This work consists of providing a temporary cofferdam and de-watering system to allow ground line construction activities at an abutment. The temporary cofferdam must extend around the length and sides of the abutment and displace moving water that is 8' deep. Products such as Aqua-Barrier, AquaDam, Portadam or other proprietary systems or a Contractor designed system may be used, but all systems must meet OSHA safety standards. For estimating, consider the water depth to include the depth of muck below the bottom of the water.

References: Manufacturer's Written Instructions
Units: LF/ Day

Section 00810-1007 Temporary Dewatering, Abutment, 12' Deep
This work consists of providing a temporary cofferdam and de-watering system to allow ground line construction activities at an abutment. The temporary cofferdam must extend around the length and sides of the abutment and displace moving water that is 12' deep. Products such as Aqua-Barrier, AquaDam, Portadam or other proprietary systems or a Contractor designed system may be used, but all systems must meet OSHA safety standards. For estimating, consider the water depth to include the depth of muck below the bottom of the water.

References: Manufacturer's Written Instructions
Units: LF/ Day

Section 00810-1008 Grout Sealing Backwall Voids
This work consists of filling voids behind backwall planks and underneath approach roadways with an excavatable flowable fill or grout meeting the properties shown in Section 121 of the Specifications. Grout shall be pumped under pressure from low points with holes placed at the tops of all voids to ensure that the voids are completely filled. The pressure shall be controlled to ensure that timber members are not deflected or damaged. Holes and openings shall be sealed as required to prevent leakage and all excess grout shall be collected for proper disposal. After grouting, all holes shall be

treated with a copper naphthenate preservative containing 2% minimum copper metal, then sealed with grout. Use a ¼" wide x 12" long gap between timbers and (1) grout hole to be filled per CF of grout for estimating purposes.

References: FDOT Specifications Section 121
Units: CF

Section 00810-1009 Temporary Steel Sheet Piles, Light Duty
This work consists of labor and materials to install temporary sheet piling with a minimum elastic section modulus, S = 2.0 in^3/ ft and a minimum wall and flange thickness, t = 0.375". For estimating purposes, use an embedment depth equal to the exposed height of the wall with a range of typical sheet pile lengths from 15' to 30' and wall lengths from 25' to 50'. Include costs for removing the sheet piling after it is no longer needed.

References: FDOT Specification Section 455
Units: SF

Section 00810-1010 Temporary Steel Sheet Piles, Medium Duty
This work consists of labor and materials to install temporary sheet piling with a minimum elastic section modulus, S = 30.0 in^3/ ft and a minimum wall and flange thickness, t = 0.375". For estimating purposes, use an embedment depth equal to the exposed height of the wall with a range of typical sheet pile lengths from 15' to 30' and wall lengths from 25' to 50'. Include costs for removing the sheet piling after it is no longer needed.

References: FDOT Specification Section 455
Units: SF

Section 00810-1011 Temporary Steel Sheet Piles, Heavy Duty
This work consists of labor and materials to install temporary sheet piling with a minimum elastic section modulus, S = 60.0 in^3/ ft and a minimum wall and flange thickness, t = 0.375". For estimating purposes, use an embedment depth equal to the exposed height of the wall with a range of typical sheet pile lengths from 15' to 30' and wall lengths from 25' to 50'. Include costs for removing the sheet piling after it is no longer needed.

References: FDOT Specification Section 455
Units: SF

Section 00810-1012 Permanent Steel Sheet Piles, Light Duty
This work consists of labor and materials to install permanent ASTM A-328 or ASTM A-709 Grade 50 sheet piling with a minimum elastic section modulus, S = 2.0 in^3/ ft and a minimum wall and flange thickness, t = 0.375". The sheet piling shall have a coal-tar epoxy coating using a product listed on the QPL. For estimating purposes, use an embedment depth equal to the exposed height of the wall with a range of typical sheet pile lengths from 15' to 30' and wall lengths from 25' to 50'. Do not include pile cap costs in this section.

References: FDOT Specification Section 455 & 926
Units: SF

Section 00810-1013 Permanent Steel Sheet Piles, Medium Duty
This work consists of labor and materials to install permanent ASTM A-328 or ASTM A-709 Grade 50 sheet piling with a minimum elastic section modulus, S = 30.0 in^3/ ft and a minimum wall and flange thickness, t = 0.375". The sheet piling shall have a coal-tar epoxy coating using a product listed on the QPL. For estimating purposes, use an embedment depth equal to the exposed height of the wall with a range of typical sheet pile lengths from 15' to 30' and wall lengths from 25' to 50'. Do not include pile cap costs in this section.

References: FDOT Specification Section 455 & 926
Units: SF

Section 00810-1014 Permanent Steel Sheet Piles, Heavy Duty
This work consists of labor and materials to install permanent ASTM A-328 or ASTM A-709 Grade 50 sheet piling with a minimum elastic section modulus, S = 60.0 in^3/ ft and a minimum wall and flange thickness, t = 0.375". The sheet piling shall have a coal-tar epoxy coating using a product listed on the QPL. For estimating purposes, use an embedment depth equal to the exposed height of the wall with a range of typical sheet pile lengths from 15' to 30' and wall lengths from 25' to 50'. Do not include pile cap costs in this section.

References: FDOT Specification Section 455 & 926
Units: SF

Section 00810-1015 Permanent FRP Sheet Piles, Light Duty
This work consists of labor and materials to install permanent fiber reinforced plastic, FRP, sheet piling with a minimum stiffness, EI = 400 lb-in^2/ ft, elastic section modulus, S = 20 in^3/ ft and flange and wall thickness, t = 0.30". The sheet piling shall meet the property requirements of Section 973 of the Specifications. Do not include pile cap costs in this section.

References: FDOT Specification Section 455 & 973
Manufacturer's Written Instructions.
Units: SF

Section 00810-1016 Permanent FRP Sheet Piles, Medium Duty
This work consists of labor and materials to install permanent fiber reinforced plastic, FRP, sheet piling with a minimum stiffness, EI = 1900 lb-in^2/ ft, elastic section modulus, S = 58 in^3/ ft and flange and wall thickness, t = 0.50". The sheet piling shall meet the property requirements of Section 973 of the Specifications. Do not include pile cap costs in this section.

References: FDOT Specification Section 455 & 973
Manufacturer's Written Instructions.
Units: SF

Section 00810-1017 Permanent Prestressed Soil Anchor
This work consists of labor and materials required to install a permanent soil nail for concrete abutment slope stabilization. Use a DSI or Williams system with double or multiple corrosion protection, 1.25"∅ 150 ksi threadbar x 40' long with a service load capacity of 112 kips, installed

through 1:2 sloped concrete. Anchors may be installed at 4' on center, but costs included in this section are for (1) anchor.

References: FDOT Specification Section 451
Manufacturer's Written Instructions.
Units: EA

Section 00810-1018 Concrete Deadman Anchorage
This work consists of labor and materials required to install a concrete deadman and ties to restrain abutment pile lateral movement due to soil pressure. The work consists of digging trenches from the backwall to the position of the deadman, installing tie-backs through the backwall to the deadman, casting the concrete for the deadman, connecting the ties to the wall or pile and tightening the ties to the proper tension, sealing the trenches with concrete to provide corrosion protection, sealing the passage through the wall to provide corrosion protection. For estimating, use a deadman system for a timber bridge. Use (2) 30"∅ x 12' deep augered shafts, reinforced with (8)#5x11'-6" vertical bars and #3 ties at 12"; (2) trenches 6" wide x 3' deep x 28' long, (2) 1"∅ x 30' long A722, 150 ksi galvanized threaded rods with heavy hex nuts and 5x5x1 ¼" plates, (1) HSS 10x4x3/ 8"x14' wale with two holes for rods galvanized or coated with coal tar epoxy. Fill the trenches 1' deep with concrete. Use Class II Concrete for the shafts and trenches.

References: FDOT Specification Section 400 & 460
FDOT Maintenance Handbook Section 5.10
Units: EA

Section 00810-1019 Rubble Riprap w/Filter Fabric & Bedding Stone (18" thick)
This work consists of labor and materials required to install rubble riprap to provide protection to ditches and embankments. Use the standard rubble riprap characteristics for ditch lining listed in Section 530 of the Specifications. Use a Type D-2 filter fabric and 4"' thick layer of bedding stone underneath the riprap

References: FDOT Specification Section 530
County Paving Specification Section 2340
Units: SY

Section 00810-1020 Rubble Riprap w/Filter Fabric & Bedding Stone (30" thick)
This work consists of labor and materials required to install rubble riprap to provide protection to banks and shores. Use the standard rubble riprap characteristics for bank and shore listed in Section 530 of the Specifications. Use a Type D-2 filter fabric and 12" thick layer of bedding stone underneath the riprap

References: FDOT Specification Section 530
County Paving Specification Section 2340
Units: SY

Section 00810-1021 4" Bedding Stone and Filter Fabric
This work consists of labor and materials required to install bedding stone and filter fabric for ditch lining as listed in Section 530 of the Specifications. Use a Type D-2 filter fabric and 4" thick layer of

bedding stone. Include costs of moving and replacing 18" thick layer of riprap over the bedding stone.

References: FDOT Specification Section 530
County Paving Specification Section 2340
Units: SY

Section 00810-1022 Riprap Rubble, Bank and Shore
This work consists of labor and materials required to install Bank and Shore riprap as listed in Section 530 of the Specifications. Does not include costs for filter fabric or bedding stone.

References: FDOT Specification Section 530
County Paving Specification Section 2340
Units: TN

Section 00810-1023 Riprap Rubble, Ditch Lining
This work consists of labor and materials required to install Ditch Lining riprap as listed in Section 530 of the Specifications. Does not include costs for filter fabric or bedding stone.

References: FDOT Specification Section 530
County Paving Specification Section 2340
Units: TN

Section 00810-1024 Grout Fill Surface Voids
This work consists of the material and labor required to fill surface voids in and around abutment slopes, riprap, approach slabs and other areas with access from the top surface using a non-excavatable flowable fill meeting the requirements of Section 121 of the Specifications.

References: FDOT Specification Section 121
Units: CY

Approach Repair Section 00820-1000

Section 00820-1001 Concrete Approach Slab
This work consists of adding a concrete approach slab to an existing bridge by removing the existing asphalt roadway and fill to the specified slab depth, preparing the sub-grade, and placing the approach slab. Use an 8" thick slab with a single reinforcing mat consisting of #6 @6" in one direction and #5 @6" in the other direction. Use Class II (bridge deck), 4,500 psi concrete.

References: FDOT Specifications Section 400
Units: SF

Section 00820-1002 Approach Slab Mudjacking
This work consists of the material and labor required to fill voids underneath a concrete approach slab and raise the slab to correct existing settlement problems. Use an excavatable flowable fill meeting the requirements of Section 121 of the Specifications for the material and follow the procedures described in the Handbook.

References: FDOT Specifications Section 121
FDOT Maintenance Handbook Section 2.5.3
Units: CY

Section 00820-1003 Grout Fill Voids (under approaches)
This work consists of the material and labor required to fill voids underneath a concrete approach without moving the slab. Use an excavatable flowable fill grout meeting the requirements of Section 121 of the Specifications for the material. Pump the grout under pressure from opposite sides of the void and place vent holes at points to ensure that the voids are completely filled. Consider a 12" thick concrete approach slab for estimating.

References: FDOT Specifications Section 121
FDOT Maintenance Handbook Section 2.5.3
Units: CY

Section 00820-1004 Earthwork Excavation by Machine
Section 00820-1005 Earthwork Excavation by Hand
Section 00820-1006 Earthwork Fill
Section 00820-1007 Remove and Replace Unsuitable Materials
Section 00820-1008 Provide Fill Along Road Shoulder (Truck Measures)

This work consists of the material and labor required to perform earthwork activities at the abutments.

References: County Paving Specification Section 2300
Units: CY

Section 00820-1009 Earthwork Establishing Grade
Section 00820-1010 Re-establish Grade on Ditch
Section 00820-1011 Final grading and seal rolling prior to paving
Section 00820-1012 Stabilization Mat Type R-1
Section 00820-1013 Stabilization Mat Type R-2
Section 00820-1014 Seed & Mulch Road & Shoulders
Section 00820-1015 Erosion Mat with Seed & Mulch included in the mat
Section 00820-1016 Sod, Staked, Argentine Bahia (< 1,000 SY)
Section 00820-1017 Sod, Staked, Argentine Bahia (> 1,000 SY)
Section 00820-1018 Clearing, Vegetation & Debris removal (trees < 12" dia.)

This work consists of the material and labor required to perform earthwork and associated activities at the abutments.

References: County Paving Specification Section 2300
Units: SY

Section 00820-1019 Remove Shrubs
Section 00820-1020 Remove Tree, less than 12”
Section 00820-1021 Remove Tree, 13”-24”
Section 00820-1022 Remove Tree, 25”-36”

This work consists of the labor required to perform the removal and disposal of the shrubs and trees at any location around the bridge.

References: County Paving Specification Section 2300
Units: EA

Section 00820-1023 Dewatering, Bladder/Cofferdam, 6’ Depth
Section 00820-1024 Dewatering, Sheet Piles, 8’ Depth
Section 00820-1025 Dewatering, Well Point
Section 00820-1026 Dewatering, Trench

This work consists of the equipment and labor required to perform dewatering operations for excavations by using the indicated system.

References: FDOT Specification Section 455-28
County Paving Specification Section 2300
Units: LF

Section 00820-1027 Dewatering Pump
This work consists of the equipment and labor required to operate a dewatering pump.

References: FDOT Specification Section 455-28
County Paving Specification Section 2300
Units: Day

Miscellaneous Repairs Section 00900

Erosion Control Section 00910-1000

Section 00910-1001 Silt Fence Type III, less than 500 LF
Section 00910-1002 Silt Fence Type III, over 500 LF
Section 00910-1003 Silt Fence Type IV, less than 500 LF
Section 00910-1004 Silt Fence Type IV, over 500 LF
Section 00910-1005 Staked Turbidity Barrier
Section 00910-1006 Floating Turbidity Barrier
Section 00910-1007 Safety Fence, less than 500 LF
Section 00910-1008 Safety Fence, over 500 LF

This work consists of placing the indicated erosion control and safety items and removing them after completion of construction in accordance with the Specifications.

References: FDOT Specifications Section 104
County Paving Specifications Sections 2300 & 2800
Units: LF

Section 00910-1009 Baled Hay or Straw
This work consists of placing and staking a standard square hay bale.

References: FDOT Specifications Section 104
Units: EA

Section 00910-1010 Arrow Head
Section 00910-1011 Common Rush (Juncus Effusus)
Section 00910-1012 Needle Rush (Juncus Roemerianus)
Section 00910-1013 Pickerelweed (Pontenderia Cordata)
Section 00910-1014 Saltmeadow Cordgrass (Spartina Patens)
Section 00910-1015 Smooth Cordgrass (Spartina Alterniflora)
Section 00910-1016 Soft Stem Bulrush (Scripus Validus)
Section 00910-1017 Wild Rice (Zizania Aquatica)

This work consists of planting the indicated plants to control erosion. The size of the plants shall be 1 gallon.

References: FDOT Specifications Section 104
Units: EA

Section 00910-1018 Certified Erosion Control Plan
Establish, quantify, and submit an approved erosion control plan prepared by a certified technician.

References: FDOT Specifications Section 104-5
Units: EA

Section 00910-1019 NPDES NOI and NOT Permit including SWPPP and Monitoring
This work includes applying for and obtaining a National Pollutant Discharge Elimination System (NPDES) permit including a Storm Water Pollution Prevention Plan (SWPPP), filing Notice of Intent (NOI) and Notice of Termination (NOT) for projects where the disturbed area is over 1.0 acre. Include costs for monitoring as required by the permit.

References: FDOT Specifications Section 104
Units: EA

Channel Repair Section 00920-1000

Section 00920-1001 Remove Debris from Water
Section 00920-1002 Remove Debris from Land

This work consists of removing and properly disposing of trash and debris from the channel water and banks. Use a maximum water depth of 10' and maximum channel width of 32' when considering equipment requirements.

References: None
Units: TN

Section 00920-1003 Scour Repair/Prevention, Rubble Riprap
Section 00920-1004 Scour Repair/Prevention, Gabions

This work consists of labor and materials required to repair or prevent scour around bridge piles and pile caps. For estimating equipment needs, use a 20' deep moving water depth.

References: FDOT Specification Section 530
FDOT Maintenance Handbook Section 6.2
Units: TN

Section 00920-1005 Scour Repair/Prevention, Underwater Concrete
This work consists of labor and materials required to place concrete to repair or prevent scour around bridge piles and pile caps or to place it along channel slopes. Use Class III (Seal) concrete that can be pumped. For estimating equipment needs, use a 20' deep moving water depth and access from the bridge deck for pumping equipment.

References: FDOT Specification Section 400
FDOT Maintenance Handbook Section 6.2
Units: CY

Section 00920-1006 SUE Level A
This work consists of Subsurface Utility Engineering (SUE) investigation using vacuum excavation to form a test hole to locate the precise horizontal and vertical position of a buried utility. Base the estimate on a single test hole.

References: The American Society of Civil Engineers' (ASCE) Standard Guideline for the Collection and Depiction of Existing Subsurface Utility Data
Units: EA

Section 00920-1007 SUE Level B
This work consists of Subsurface Utility Engineering (SUE) investigation using the application of appropriate surface geophysical methods such as Ground Penetrating Radar or other electromagnetic method to determine the existence and horizontal position of a buried utility. Base the estimate on LF of a single utility.

References: The American Society of Civil Engineers' (ASCE) Standard Guideline for the Collection and Depiction of Existing Subsurface Utility Data
Units: LF

Culvert Repair Section 00930-1000

Section 00930-1001 Remove Sand, Silt, & Vegetation from Existing Culverts
This work consists of removing and properly disposing of materials which restrict water flow through the culvert. The removal process shall not damage the culvert. Use a typical 9' wide x 5' high culvert with 2'-6" deep water for estimating equipment needs.

References: None
Units: CY

Section 00930-1002 Clean Concrete Box Culvert
This work consists of cleaning the concrete surfaces to remove and dispose of all debris using mechanical means along with high-pressure water and air. The concrete shall not be damaged. Water used shall meet the requirements of the FDOT Specifications. Use a typical 9' wide x 5' high culvert with 2'-6" deep water for estimating equipment needs.

References: FDOT Specification Section 923
Units: SF

Section 00930-1003 Crack Repair (epoxy injection)(above water)
This work consists of preparing the surface and epoxy sealing the crack according to the manufacturer's written instructions for the approved material. Consider a 0.024" wide x 2" deep crack for estimating purposes.

References: FDOT Maintenance Handbook Section 4.5.1
FDOT Specification Section 411
Units: LF

Section 00930-1004 Crack Repair (penetrant sealer)
This work consists of preparing the surface and sealing the crack according to the manufacturer's written instructions for the approved material. Consider a 0.011" wide x 2" deep crack for estimating purposes.

References: FDOT Maintenance Handbook Section 4.5.1
FDOT Specification Section 413
Units: LF

Section 00930-1005 Crack Repair (cementitious, vertical)
This work consists of preparing the surface and repairing the concrete defect using a material for predominantly vertical or overhead repairs that meets the requirements of the Specifications. Follow all manufacturer's written instruction for repair procedures.

References: FDOT Specification Section 930
FDOT Maintenance Handbook Section 5.14.1
Units: CF

Section 00930-1006 Crack Repair (cementitious, horizontal)
This work consists of preparing the surface and repairing the concrete defect using a material for

predominantly horizontal repairs that meets the requirements of the Specifications. Follow all manufacturer's written instruction for repair procedures.

References: FDOT Specification Section 930
FDOT Maintenance Handbook Section 5.14.1
Units: CF

Section 00930-1007 Concrete Culvert Repair Miscellaneous Reinforcing
This work consists of the material and labor required to place steel reinforcing for concrete culvert repairs.

References: FDOT Specification Section 415
Units: LB

Section 00930-1008 Drill & Epoxy Grout Culvert Reinforcing
This work consists of preparing a hole and epoxy grouting reinforcing steel as part of a concrete culvert or headwall repair. This section includes the cost of epoxy material and labor for anchoring a reinforcing bar. The reinforcing steel is not included here. Use an epoxy meeting the requirements of the Specifications. Use a 15.2" embedment and a 0.875"Ø hole for grouting a #6 bar for estimating purposes.

References: FDOT Specification Section 416
Units: EA

Section 00930-1009 Sealing Concrete Culverts (penetrant sealer)
This work consists of preparing and sealing concrete culverts (labor only) according to the Specifications. This section includes cleaning in the preparation but does not include any concrete repair. The sealer is applied over the entire exposed surface of the substructure.

References: FDOT Maintenance Handbook Section 4.5.3 & 5.1.1
Units: SF

Section 00930-1010 Temporary Water Diversion, 4' Deep
This work consists of providing a temporary cofferdam to divert water away from one cell of a multi-cell box culvert. The temporary cofferdam must be sealed at the headwall and displace moving water that is 4' deep. Products such as Aqua-Barrier, AquaDam, Portadam or other proprietary systems or a Contractor designed system may be used, but all systems must meet OSHA safety standards. For estimating, consider the water depth to include the depth of muck below the bottom of the water.

References: Manufacturer's Written Instructions
Units: LF/ Day

Section 00930-1011 Temporary Water Diversion, 8' Deep
This work consists of providing a temporary cofferdam to divert water away from one cell of a multi-cell box culvert. The temporary cofferdam must be sealed at the headwall and displace moving water that is 8' deep. Products such as Aqua-Barrier, AquaDam, Portadam or other proprietary systems or a Contractor designed system may be used, but all systems must meet OSHA safety standards. For

estimating, consider the water depth to include the depth of muck below the bottom of the water.

References: Manufacturer's Written Instructions
Units: LF/ Day

Fender System Repair Section 00940-1000

Section 00940-1001 Steel Fender System Damage Replacement
This work consists of labor and materials required to replace a damaged section of the referenced steel fender system. Use Plan Unit 'A' shown in Figure 940-1001-1 as the typical fender. The work to be estimated includes the removal and disposal of a 12' section of (4) timber wales along with (6) 6' sections and (3) 5' sections of HP12x53 braces and (1) HP14x73x60' long pile with 30' of embedment. Include the cost of cutting the damaged steel away from the remaining adjacent fender system sections. Replace the members removed with new members of the same size and configuration.

References: FDOT Specification Section 455, 460, and 470
Appendix A Figures 940-1001-1 to 940-1001-5
Units: EA

Section 00940-1002 Fender System Walkway Replacement
This work consists of labor and materials required to replace a fender system walkway consisting of (2) 3"x8" timber stringers and the 2"x6" flooring as shown in Figure 940-1001-1. Include demolition and disposal costs for the existing members.

References: FDOT Specification Section 470
Appendix A Figure 940-1002-1
Units: LF

Concrete Boat Ramp Section 00950-1000

Section 00950-1001 Concrete Boat Ramp
This work consists of labor and materials required to construct a boat ramp as shown in Appendix A. Include costs for minor clearing and grubbing as well as excavation to place the base material. Do not include costs for the temporary cofferdam construction and dewatering in this section. Do not include Federal and State permitting costs in this section, but include costs for a County Building Permit. For a typical ramp size, use 30' long x 24' wide with a 14% slope, but provide price based on SF of ramp.

References: FDOT Specification Section 455, 460, and 470
Appendix A Figure 950-1001-1
Units: SF

Section 00950-1002 Temporary Dewatering, Boat Ramp, 4' Deep
This work consists of providing a temporary cofferdam and de-watering system to allow concrete boat ramp construction. The temporary cofferdam must extend around the length and sides of the ramp and displace moving water that is 4' deep. Products such as Aqua-Barrier, AquaDam, Portadam or other proprietary systems or a Contractor designed system may be used, but all systems must meet

OSHA safety standards. For estimating, consider the water depth to include the depth of muck below the bottom of the water.

References: Manufacturer's Written Instructions
Units: LF/ Day

Section 00950-1003 Temporary Dewatering, Boat Ramp, 8' Deep
This work consists of providing a temporary cofferdam and de-watering system to allow concrete boat ramp construction. The temporary cofferdam must extend around the length and sides of the ramp and displace moving water that is 8' deep. Products such as Aqua-Barrier, AquaDam, Portadam or other proprietary systems or a Contractor designed system may be used, but all systems must meet OSHA safety standards. For estimating, consider the water depth to include the depth of muck below the bottom of the water.
References: Manufacturer's Written Instructions
Units: LF/ Day

Section 00950-1004 Temporary Dewatering, Boat Ramp, 12' Deep
This work consists of providing a temporary cofferdam and de-watering system to allow concrete boat ramp construction. The temporary cofferdam must extend around the length and sides of the ramp and displace moving water that is 12' deep. Products such as Aqua-Barrier, AquaDam, Portadam or other proprietary systems or a Contractor designed system may be used, but all systems must meet OSHA safety standards. For estimating, consider the water depth to include the depth of muck below the bottom of the water.

References: Manufacturer's Written Instructions
Units: LF/ Day

Vinyl Sheet Pile Seawall Section 00960-1000

Section 00960-1001 Vinyl Sheet Pile Seawall (Tied)
This work consists of labor and materials required to construct a tied vinyl sheet pile seawall as shown in Appendix A, designed by Wetland Sciences, Inc. Include excavation costs required for placing the deadmen and tie rods along with the connection hardware required to connect the walers and tie rods to the piles. Tie rods shall be spaced at 4'-0" maximum along the length of the wall. Lumber shall be treated for marine and buried exposure. Include the costs to excavate a 2'-0" wide x 4'-0" deep section behind the seawall along with the removal of the existing wall and the placement of a well-graded gravel/ sand backfill material. Do not include Federal and State permitting costs in this section, but include costs for a County building permit. The sheet pile shall be vinyl with a minimum section modulus of 5.8 in^3/ ft and an allowable bending moment of 1,547 ft-lb/ ft. Use a 10'-0" long sheet pile.

References: FDOT Specification Section 455, 460, and 470
Vinyl Pile Manufacturer's Written Instructions
Appendix A Figure 960-1001-1
Units: LF

Section 00960-1002 Vinyl Sheet Pile Seawall (Cantilever)
This work consists of labor and materials required to construct a cantilever vinyl sheet pile seawall

similar to that shown in Appendix A (omit the ties and deadmen anchorages). Include the costs to excavate a 2'-0" wide x 4'-0" deep section behind the seawall along with the removal of the existing wall and the placement of a well-graded gravel/ sand backfill material. Do not include Federal and State permitting costs in this section, but include costs for a County building permit. The sheet pile shall be vinyl with a minimum section modulus of 17.6 in^3/ ft and an allowable bending moment of 4,693 ft-lb/ ft. Use a 14'-0" long sheet pile.

References: FDOT Specification Section 455, 460, and 470
Vinyl Pile Manufacturer's Written Instructions
Appendix A Figure 960-1001-1 (similar)
Units: LF

Timber Pier Section 00970-1000

Section 00970-1001 Timber Walkway (5' wide)
This work consists of labor and materials required to construct a 5' wide timber walkway/ pier as shown in Appendix A. Do not include Federal and State permitting costs in this section, but include costs for a County building permit. Use 30'-0" long piles for estimating.

References: FDOT Specification Section 455, 460, and 470
Appendix A Figure 970-1000-1 and 970-1001-1
Units: LF

Section 00970-1002 Kayak Ramp
This work consists of labor and materials required to construct an 8' wide Kayak Ramp as shown in Appendix A. Do not include Federal and State permitting costs in this section, but include costs for a County building permit. Each ramp will include a 10' fiberglass grating end section and a 5' landing section at the top of the ramp. For estimating, consider a 30' minimum length ramp. Use 30'-0" long piles for estimating.

References: FDOT Specification Section 455, 460, and 470
Appendix A Figure 970-1000-1, 970-1002-1, and 970-1002-2
Units: LF

Section 00970-1003 Timber Dock/Terminal Platform, 10'x10'
This work consists of labor and materials required to construct a 10'x10' timber platform at the end of a timber walkway as shown in Appendix A. Use 30'-0" long piles for estimating.

References: FDOT Specification Section 455, 460, and 470
Appendix A Figure 970-1000-1 and 970-1003-1
Units: EA

Section 00970-1004 Timber Dock/Terminal Platform, 10'x20'
This work consists of labor and materials required to construct a 10'x20' timber platform at the end of a timber walkway as shown in Appendix A. Use 30'-0" long piles for estimating.

References: FDOT Specification Section 455, 460, and 470

Appendix A Figure 970-1000-1 and 970-1004-1
Units: EA

Pervious Concrete Pavement 00980-1000

Section 00980-1001 Pervious Concrete Pavement, 6" Thick
This work consists of labor and materials required to place a minimum 6" of pervious concrete pavement for parking areas at boat ramps and other miscellaneous locations as directed by the County. Provide pervious concrete pavement with minimum 20% porosity and density of not less than 110 pcf. Submit mix design in accordance with Specification to the County for review and approval prior to placement. Include preparation of subgrade and subbase per referenced specification with this section.

References: Florida Concrete and Products Association, Pervious Concrete Specification

Units: SY

Appendix A

Appendix A contains details to be used for estimating item costs. These details are for estimating unit costs only and should not be used for construction without permission from the County and a professional engineer.

General Notes:

1. Furnish Poured Joint with Backer Rod Expansion Joint Systems and Reflective Crack Joints in accordance with Specification Section 458 and 932 as supplemented and modified by these details. Furnish joint systems consisting of Poured Joint Material, Foam Backer Rods, and all associated miscellaneous components. (Dow XJS Expansion Joint System with 902 RCS Joint Sealant is the preferred joint system) This sheet replaces Standard Index 21110.
2. Manufacturers seeking approval of Poured Joint with Backer Rod Expansion Joint Systems for inclusion on the Qualified Products List (QPL) as pre-approved designs must submit application along with design documentation showing the expansion joint meets the specification, geometric and material requirements specified herein.
3. Submit material product information, joint shop drawings and installation procedures for approval prior to installation.
4. Refer to the Poured Expansion Joint Data Table for the minimum and maximum Dim. "A" @ 70° F. Align the inside edges of the joint nosing with the existing deck openings for openings within the limits for "A". Modify the joint as shown in the Undersized Joint Opening Detail for bridge deck joints that are open less than the minimum "A" dimension. Do not use this joint detail for joint openings which exceed the maximum "A" dimension.
5. Joint opening dimensions are measured perpendicular to the joint.
6. Install the joint sealant when the ambient temperature is between 55° F and 85° F and will be rising for the next three hours. For temperatures below 70° F, at the time the joint is constructed, increase the joint opening "A" dimension per 10° F as shown in the Poured Expansion Joint Data Table. Do not change dimension "A" for temperatures above 70° F.
7. Joint sealant shall be a Type D silicone sealant material that meets the requirements of Section 932 and is listed on the QPL list.
8. Backer rod material shall be soft type, low-density extruded polyethylene with a skin-like outer texture that will not bond to the silicone sealant as recommended by the joint sealant manufacturer. Size as recommended by joint manufacturer.
9. Joint nosing material shall be either a polymer mortar or elastomeric concrete designed and tested by the manufacturer to be used with the QPL sealant to produce a bridge deck joint sealant system meeting the movement requirements shown in the Poured Expansion Joint Data Table. The system shall have a 5-year minimum history of successful use on FDOT projects and shall be covered by warranty according to section 425.
10. Payment for the joint system shall be made per linear foot under Pay Item 458-1-21, Bride Deck Expansion Joint, Rehabilitation, Poured Joint With Backer Rod. Measurement shall be actual length along joint center line between outer limits shown on the plan details including lengths in curbs and barriers. All work and materials necessary to complete the installation of the joint as described in the installation notes and as recommended by the manufacturer shall be included in the indicated pay item.

Installation Notes:

1. Installation procedures provided here are general requirements. The joint shall be installed in accordance with the manufacturer's written instructions. Refer to Specification Section 458 for additional installation and construction requirements. A manufacturer's representative shall be on site to demonstrate the proper preparation and installation of all joint components prior to any joint installation.
2. Mill the existing ACP overlay and place the new ACP surface as detailed in the roadway plans. Care shall be taken to prevent damage to the concrete bridge deck during the milling procedure. Any damage to the bridge deck from the milling process shall be repaired at the Contractor's expense. Existing plans show asphalt 2" thick at joints and 1 ½" thick at midspan - Field verify prior to milling. Identify bridge deck joint centerlines prior to placing the new ACP overlay.
3. Saw-cut the overlay parallel to and offset the minimum nosing width distance from each joint centerline. Cut the asphalt within 24 hours after the new asphalt overlay has cooled to a temperature of 120° F. Saw-cut shall extend the full depth of the ACP to reach the concrete deck surface, but extend no deeper than 0.25" into the concrete.
4. Remove the overlay material over the bridge deck joints between saw cuts down to the concrete deck surface. Clean the surface to expose aggregate in the concrete deck. Prepare the deck and bridge joint opening according to the manufacturer's written instructions including sand-blasting, patching or repairing, and cleaning.
5. Install joint width form in the joint opening to the height of the driving surface. Increase the form width above the deck for undersized joints. Prime the concrete and asphalt surfaces as recommended if required.
6. Install the nosing material and allow it to cure properly. Remove the joint width form and create the chamfer as recommended by the manufacturer. Seal any cold joints placed in the nosing material.
7. Prime the joint faces, install the backer rod, and install the sealant material as recommend by the manufacturer.

Figure 120-1000-1 – Poured Silicon Deck Joint Notes

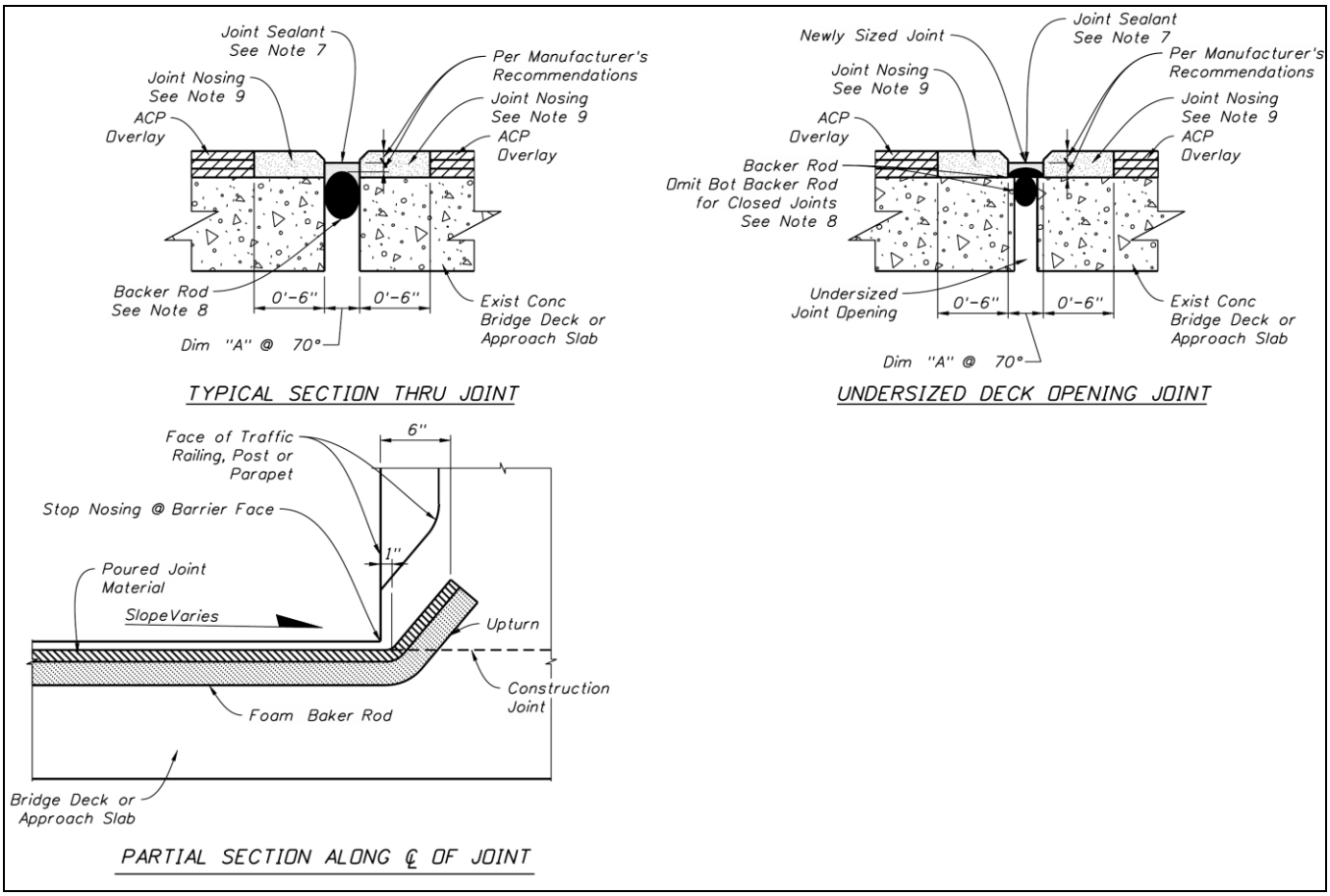

Figure 120-1000-2 – Poured Silicon Deck Joint Details

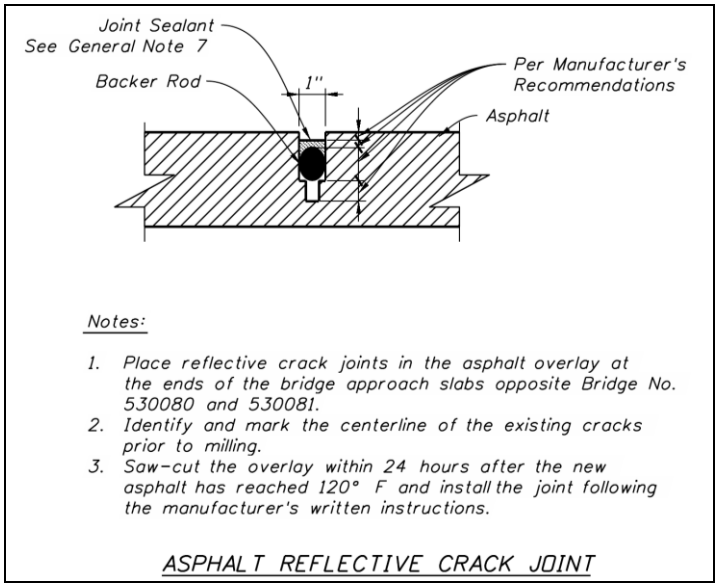

Figure 120-1011-1 – Asphalt Reflective Crack Joint Details

PROJECT NOTES

1. BENCH MARK DATUM FOR THIS PROJECT IS BASED ON NGVD 29. BENCH MARKS SHALL BE PROTECTED DURING CONSTRUCTION OPERATIONS.

2. GOVERNING STANDARDS & SPECIFICATIONS: FLORIDA DEPARTMENT OF TRANSPORTATION, DESIGN STANDARDS DATED 2008, AND STANDARD SPECIFICATIONS FOR ROAD AND BRIDGE CONSTRUCTION DATED 2010, AS AMENDED BY CONTRACT DOCUMENTS.

3. THE CONTRACTOR SHALL NOT BRING ANY HAZARDOUS MATERIALS ON TO THE PROJECT. SHOULD THE CONTRACTOR REQUIRE SUCH FOR PERFORMING THE CONTRACTED WORK, THE CONTRACTOR SHALL REQUEST, IN WRITING, WRITTEN PERMISSION FROM THE CONSTRUCTION PROJECT ADMINISTRATOR. THE CONTRACTOR SHALL PROVIDE A COPY TO THE DISTRICT CONTAMINATION INPACTS COORDINATOR (DCIC). THE CONTRACTOR SHALL PROVIDE THE DCIC WITH A COPY OF THE MATERIAL SAFETY DATA SHEET (MSDS) FOR EACH HAZARDOUS MATERIAL PROPOSED FOR USE. THE CONSTRUCTION PROJECT ADMINISTRATOR SHALL COORDINATE WITH THE DCIC PRIOR TO ISSUING WRITTEN APPROVAL TO THE CONTRACTOR. BECAUSE STATE LAW DOES NOT TREAT PETROLEUM PRODUCTS THAT ARE PROPERLY CONTAINERIZED AND INTENDED FOR EQUIPMENT USE AS A HAZARDOUS MATERIAL, SUCH PRODUCTS DO NOT NEED A MSDS SUBMITTAL. ANY KNOWN OR, SUSPECTED HAZARDOUS MATERIAL FOUND ON THE PROJECT BY THE CONTRACTOR SHALL BE IMMEDIATELY REPORTED TO THE CONSTRUCTION PROJECT ADMINISTRATOR WHO SHALL DIRECT THE CONTRACTOR TO PROTECT THE AREA OF KNOWN OR SUSPECTED CONTAMINATION FROM FURTHER ACCESS. THE CONSTRUCTION PROJECT ADMINISTRATOR IS TO NOTIFY THE DCIC OF THE DISCOVERY. THE DCIC WILL ARRANGE FOR INVESTIGATION, IDENTIFICATION, AND REMEDIATION OF THE HAZARDOUS MATERIAL. THE CONTRACTOR SHALL NOT RETURN TO THE AREA OF CONTAMINATION UNTIL APPROVAL IS PROVIDED BY THE CONSTRUCTION PROJECT ADMINISTRATOR; THE DCIC WILL ADVISE THE CONSTRUCTION PROJECT ADMINISTRATOR.

4. THE CONTRACTOR IS RESPONSIBLE FOR PROPER DISPOSAL OF ALL CONSTRUCTION DEBRIS, IN APPROVED DISPOSAL SITES.

5. EXSITING UTILITIES ARE TO REMAIN IN PLACE.

6. IF THE CONTRACTOR ENCOUNTERS A CONFLICT WITH EXISTING UTILITIES THE CONTRACTOR SHALL NOTIFY THE UTILITY COMPANY FOR THE EXISTING UTILITY TO BE RELOCATED.

7. THE CONTRACTOR SHALL NOTIFY UTILITY OWNERS THROUGH SUNSHINE ONE CALL OF FLORIDA, INC. (1-800-432-4770) AND UTILITY OWNERS LISTED BELOW TWO BUSINESS DAYS IN ADVANCE OF BEGINNING CONSTRUCTION ON THE JOB SITE.

8. UTILITY OWNERS:

SANITARY SEWER/WATER-EMERALD COAST UTILITY AUTHORITY
Mr. Mike Hamlin (mhamlin@ecua.org)
P.O. BOX 15311
PENSACOLA, FL. 32514 PH: (850)969-6501

ELECTRIC: GULF POWER
MR. CHAD SWAILS (ceswails@southernco.com)
5120 DOGWOOD DRIVE
MILTON, FL. 32570 PH: (850) 429-2603

NATURAL GAS: ENERGY SERVICES OF PENSACOLA
MR. GLENN BAILEY (gbailey@ci.pensacola.fl.us)
1625 ATWOOD DRIVE
PENSACOLA, FL. 32514 PH. (850) 474-5310

CABLE: COX CABLE
MR. TROY YOUNG (Troy.Young@cox.com)
2421 EXECUTIVE PLAZA
PENSACOLA, FL. 32504 PH: (850) 857-4564)

TELEPHONE: AT & T FLORIDA
Mr. Stan Wright (sw1778@att.com
605 WEST GARDEN STREET PH: (850)436-1488

SUNSHINE STATE ONE-CALL
7200 LAKE ELLENOR DRIVE, SUITE 200
ORLANDO, FL. 32809 PH: (800) 432-4770)

9. THE CONTRACTORS SHALL NOTIFY THE COUNTY DESIGN ENGINEER OR DESIGNEE 48 HOURS PRIOR TO CONSTRUCTION.

10. ALL CONDITIONS AND STIPULATIONS OF THE CONSRUCTION PERMITS AND THE APPROVALS ISSUED BY THE ESCAMBIA COUNTY ENGINEER SHALL BE COMPLIED WITH IN EVERY DETAIL.

11. THE CONTRACTOR SHALL DETERMINE THE EXACT LOCATION OF ALL EXISTING UTILITIES BEFORE COMMENCING WORK IN EACH AREA. THE CONTRACTOR AGREES TO BE COMPLETELY RESPONSIBLE FOR ALL DAMAGES WHICH MIGHT OCCUR BY HIS FAILURE TO EXACTLY LOCATE AND PRESERVE ALL UTILITIES.

12. ALL ROADS DAMAGED BY CONSTRUCTION OPERATIONS ARE TO BE PATCHED OR RECONSTRUCTED AS DIRECTED BY THE COUNTY ENGINEER OR DESIGNEE.

13. THE CONTRACTOR SHALL TAKE STEPS NECESSARY TO PREVENT EROSION AND ANY OFF SITE SEDIMENT TRANSPORT RESULTING FROM INCREASED RUNOFF DURING CONSTRUCTION BY PROVIDING SILT FENCE AND/OR STAKED HAY BALES AS REQUIRED BY FDOT INDEX 102, THE FLORIDA STORMWATER, EROSION, AND SEDIMENT CONTROL INSPECTOR'S MANUAL, 2000 EDITION, OR AS INDICATED ON THE PLANS. ALL EROSION CONTROL MEASURES SHALL REMAIN IN PLACE UNTIL ASSOCIATED DISTURBED AREAS ARE STABILIZED AS TO REDUCE SEDIMENT RUNOFF, UNLESS OTHERWISE DIRECTED BY THE ENGINEER OR DESIGNEE.

Figure 720-1013-1 – Helper Bent Notes 1

14. ANY NECESSARY PERMITS WILL BE THE RESPONSIBILITY OF THE CONTRACTOR. ESCAMBIA COUNTY OR ITS DESIGNEE WILL ASSIST CONTRACTOR WITH REQUIRED PERMITS.

15. THE CONTRACTOR IS CAUTIONED TO VISIT THE SITE AND FAMILIARIZE HIMSELF WITH THE PROJECT PRIOR TO BIDDING AND/OR CONSTRUCTION.

16. IT SHALL BE THE CONTRACTORS RESPONSIBILITY TO PRESERVE OR RELOCATE ALL BENCHMARKS AS NEEDED DURING CONSTRUCTION. ANY PUBLIC LAND CORNER MONUMENTS WITHIN THE LIMITS OF CONSTRUCTION SHALL BE PROTECTED. IF A CORNER MONUMENT IS IN DANGER OF BEING DESTROYED AND HAS NOT BEEN PROPERLY REFERENCED, THE CONTRACTOR SHALL NOTIFY THE ENGINEER OR DESIGNEE IMMEDIATLEY. ANY ESCAMBIA COUNTY HARN/GPS NETWORK MONUMENT WITHIN THE LIMITS OF CONSTRUCTION SHALL BE PROTECTED. IF A HARN/GPS NETWORK MONUMENT IS DISTURBED OR DESTROYED THE CONTRACTOR SHALL BE RESPONSIBLE TO REPLACE THE MONUMENT, HAVE THE POSITION DETERMINED BY A FLORIDA LICENSED PROFESSIONAL SURVEYOR AND MAPPER, USING GUIDELINES AS ESTABLISHED BY NATIONAL GEODETIC SURVEY FOR BLUE BOOKING AND APPROVAL.

17. ALL FLORIDA DEPARTMENT OF ENVIRONMENTAL PROTECTION, DIVISION OF STATE LANDS, BUREAU OF SURVEY AND MAPPING GPS NETWORK MONUMENTATION SHALL BE PROTECTED AT ALL TIMES. ANY DISTURBANCE TO SAID MONUMENTS SHALL BE REPLACED AT THE CONTRACTORS EXPENSE WITH NO COMPENSATION FROM THE COUNTY.

18. THE CONTRACTOR IS TO USE CAUTION WHEN WORKING IN OR AROUND AREAS OF OVERHEAD TRANSMISSION LINES AND UNDERGROUND UTILITIES.

19. THE CONTRACTOR SHALL MATCH EXISTING CONDITIONS AT THE BEGINNING AND END OF CONSTRUCTION AS DIRECTED BY THE COUNTY ENGINEER OR DESIGNEE.

20. ANY REFERENCE TO FDOT STANDARD SPECIFICATIONS FOR ROAD AND BRIDGE CONSTRUCTION, LATEST EDITION, DIVISION 1, GENERAL REQUIREMENTS AND COVENANTS, SHALL BE EXCLUDED AND NOT APPLICABLE TO ANY SPECIFICATION REFERRED HEREIN OR OTHERWISE LISTED IN THESE PLANS OR RELATED DOCUMENTS OR THE ESCAMBIA COUNTY TECHNICAL SPECIFICATIONS.

21. CONTRACTOR SHALL COMPLY WITH ALL F.D.E.P. AND ARMY CORP. OF ENGINEERS REQUIREMENTS.

22. ONLY ACCESS TO THE ROAD R/W AS SHOWN IS GUARANTEED BY THE COUNTY. PRIVATE R/W REQUIRED BY THE CONTRACTOR TO FACILITATE CONSTRUCTION SHALL BE ACQUIRED BY THE CONTRACTOR WITH NO ADDITIONAL COMPENSATION OR ASSISTANCE FROM THE COUNTY.

23. VEGETATION ON R/W AND EASEMENTS SHALL BE RESTORED TO ORIGINAL CONDITION UNLESS OTHERWISE NOTED ON THE PLAN SHEETS. COST OF SAID RESTORATION SHALL BE CONSIDERED INCIDENTAL TO OTHER PAY ITEMS.

24. UTILITIES TO REMAIN AND BE PROTECTED DURING CONSTRUCTION. NECESSARY REPAIRS SHALL BE CONSIDERED INCIDENTAL TO OTHER PAY ITEMS AND SHALL BE TO THE SATISFACTION OF UTILITY OWNERS.

Figure 720-1013-2 – Helper Bent Notes 2

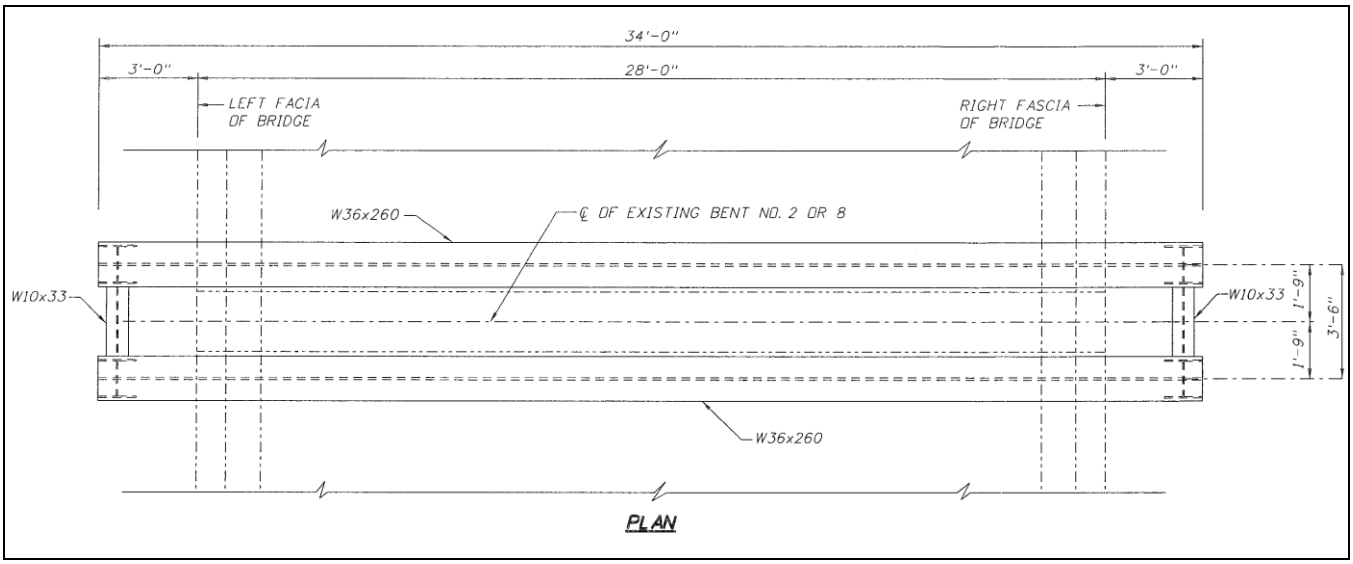

Figure 720-1013-3 – Helper Bent Plan

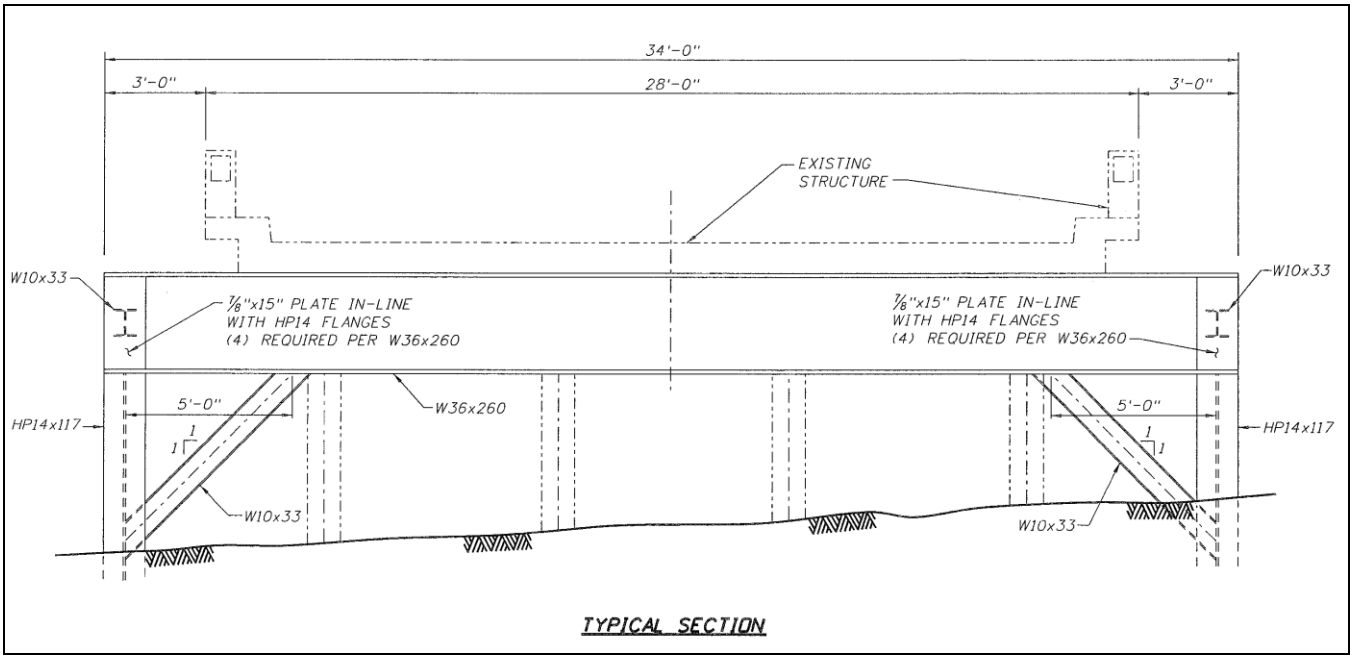

Figure 720-1013-4 – Helper Bent Section

NOTES:

1. ALL WELDS SHALL BE 5/16" F70XX CONTINUOUS WELDS.
2. PILE DESIGN CAPACITY IS 50 TONS.
3. PILE TIP ELEVATION ESTIMATED TO BE AT 80 FEET BELOW GRADE.

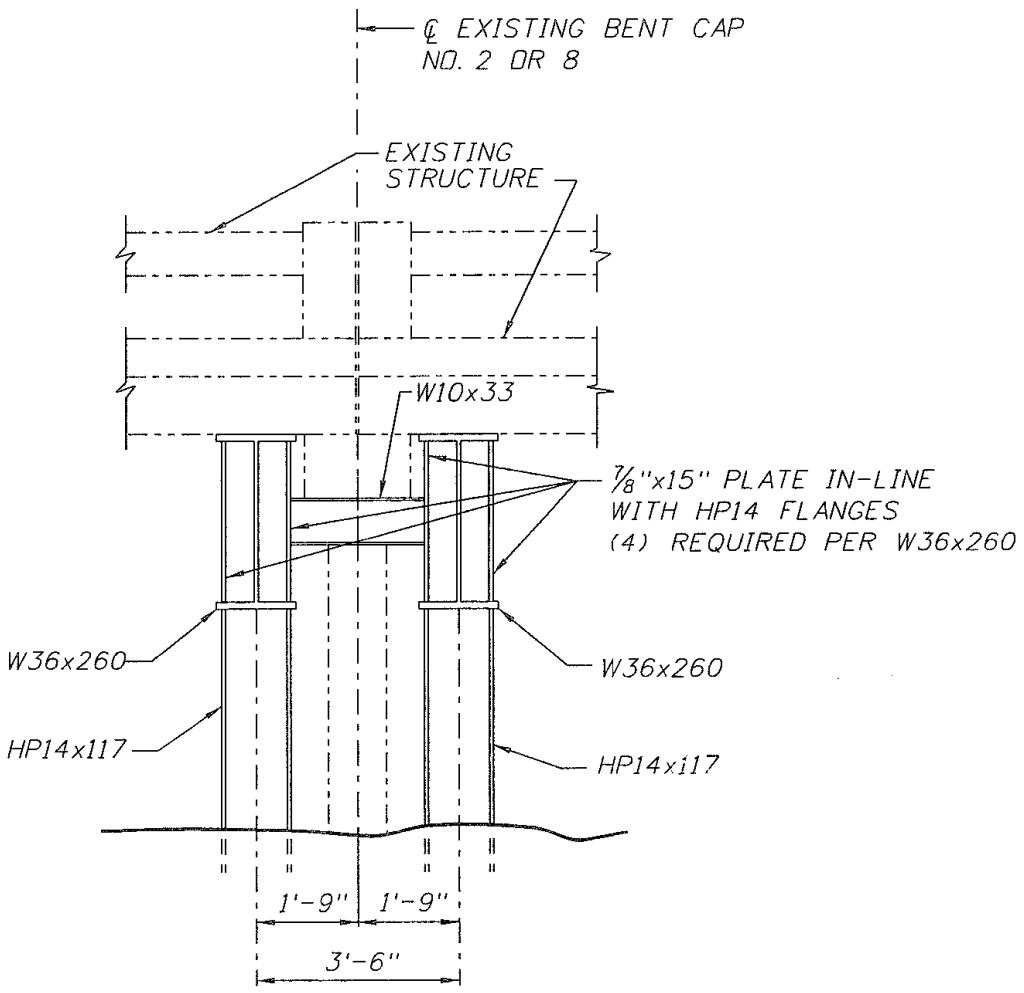

END VIEW

Figure 720-1013-5 – Helper Bent End View

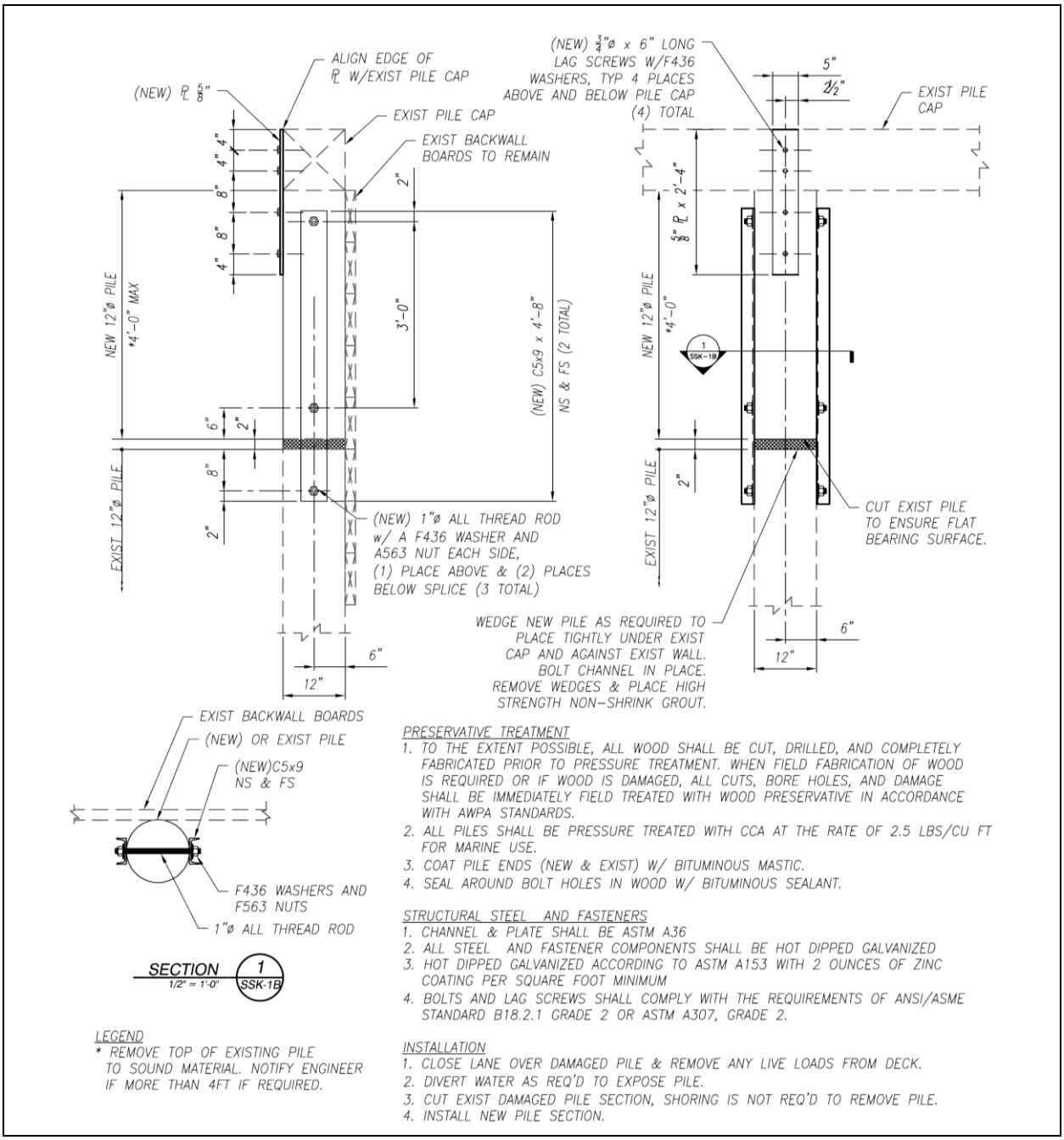

Figure 730-1013-1 – Abutment Timber Pile Splice

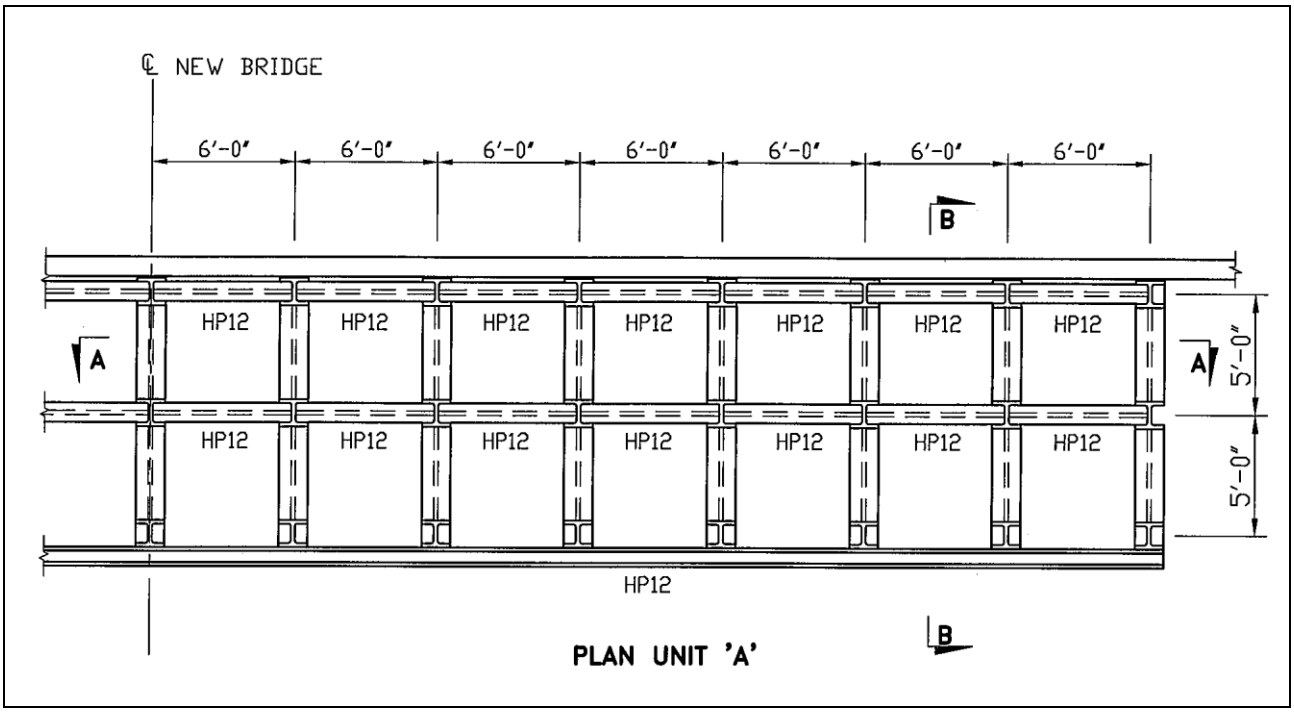

Figure 940-1001-1 – Fender System Plan View

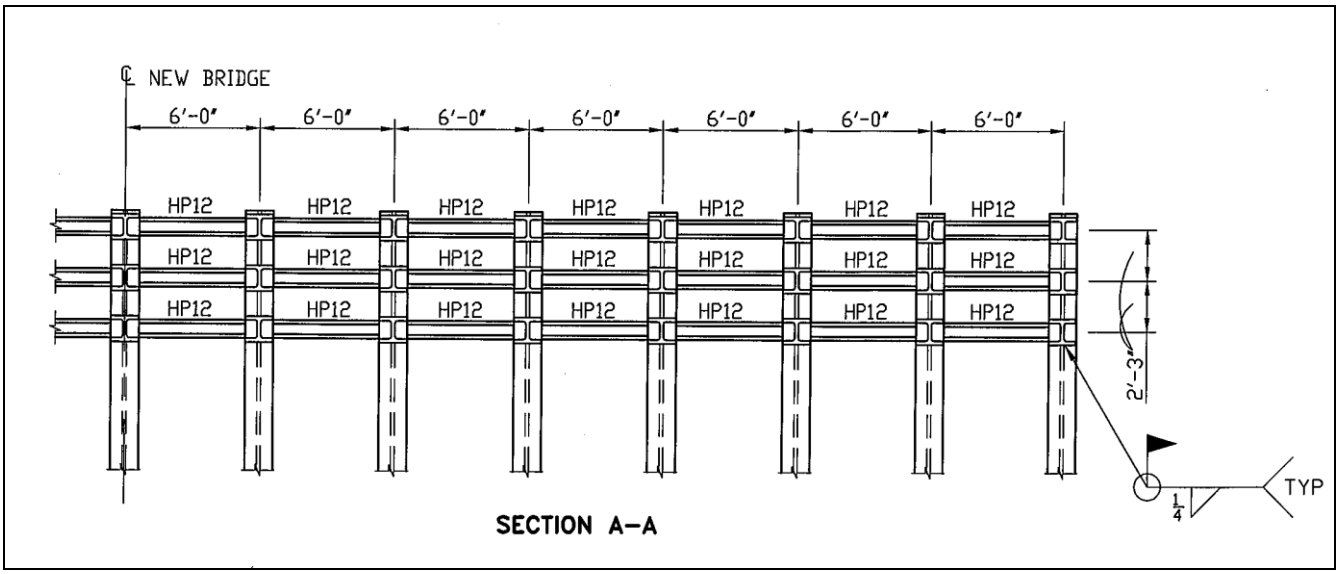

Figure 940-1001-2 – Fender System Section A-A

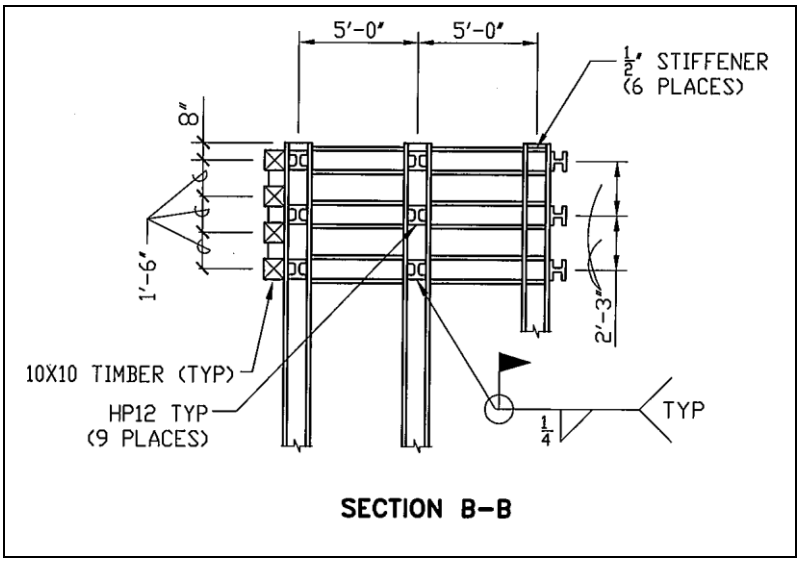

Figure 940-1001-3 – Fender System Section B-B

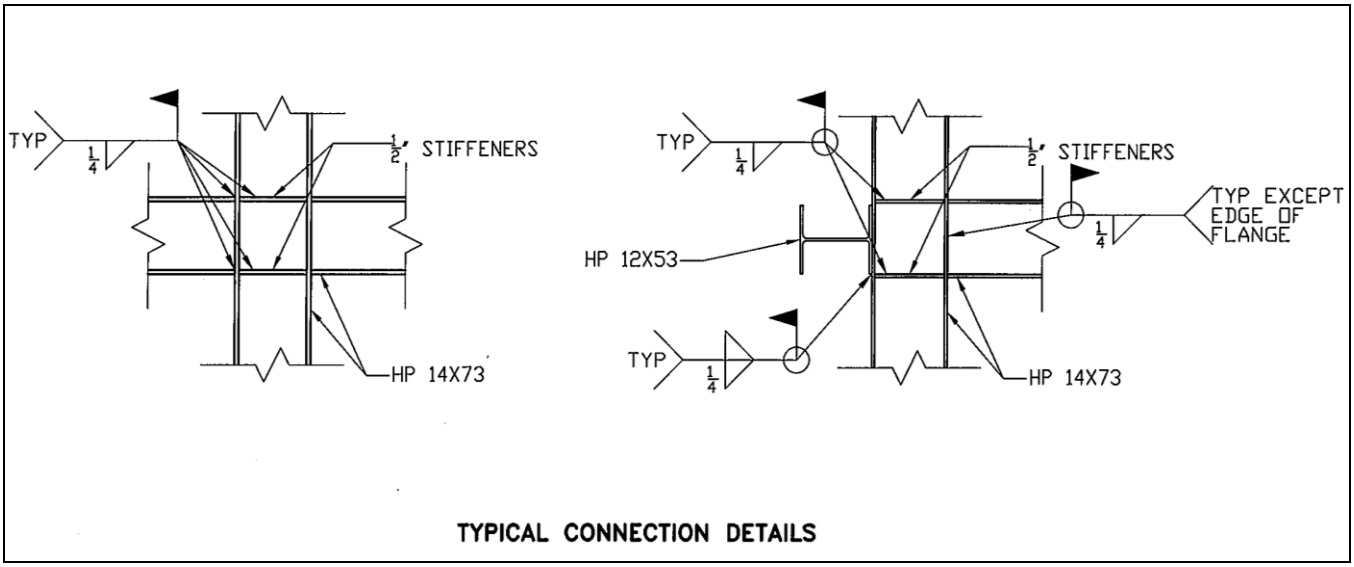

Figure 940-1001-4 – Fender System Connections

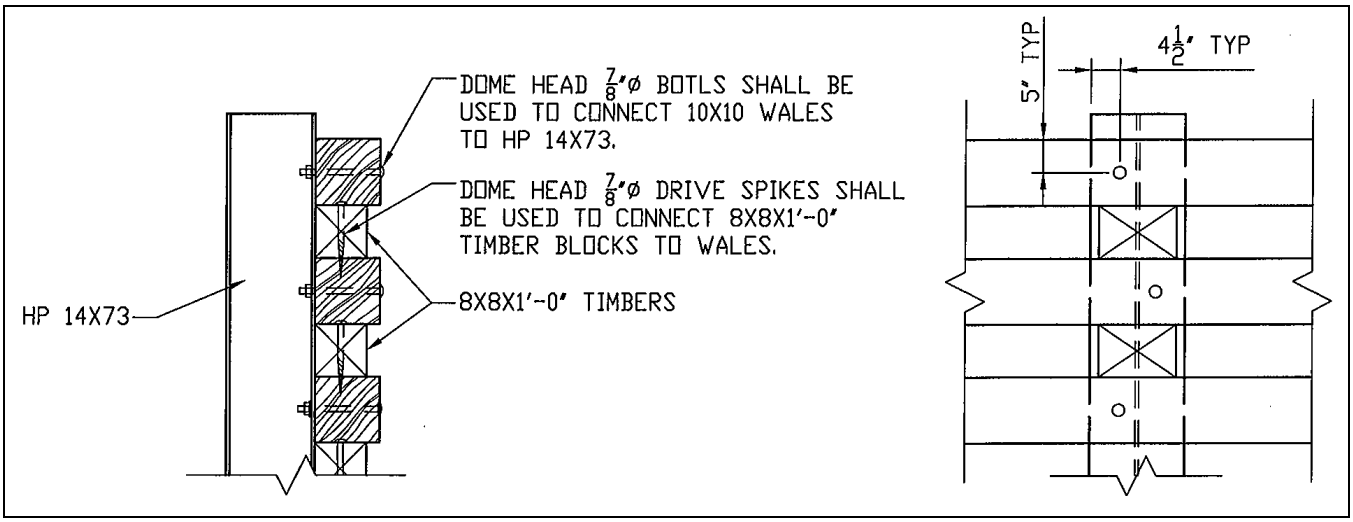

Figure 940-1001-5 – Fender System Wale Connections

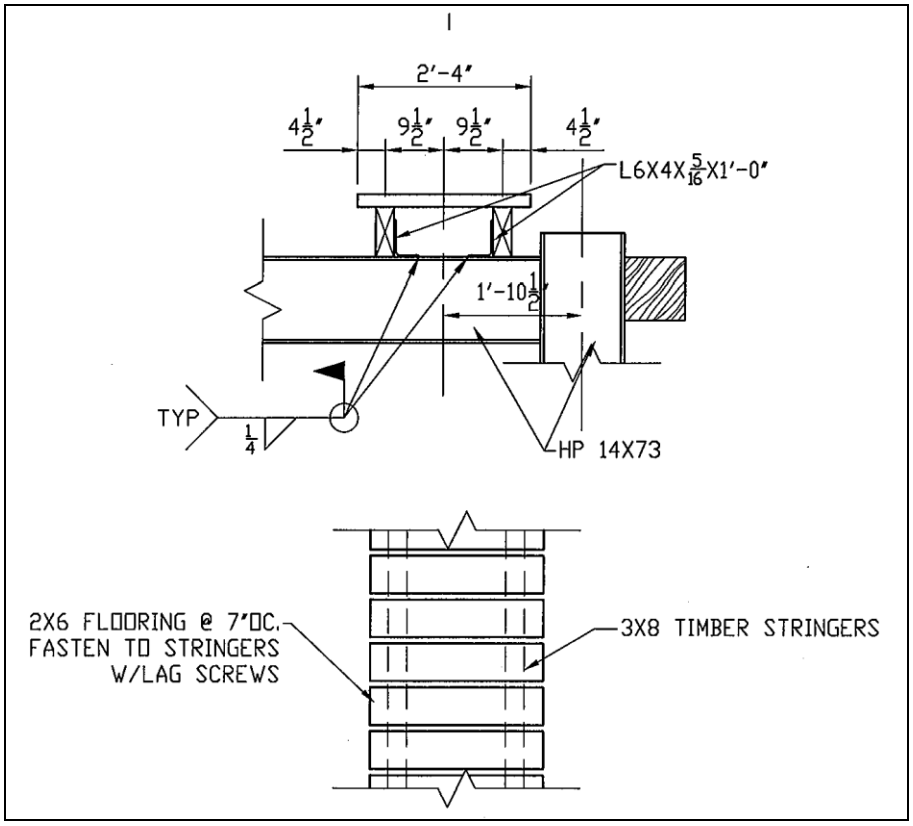

Figure 940-1002-1 – Fender System Walkway

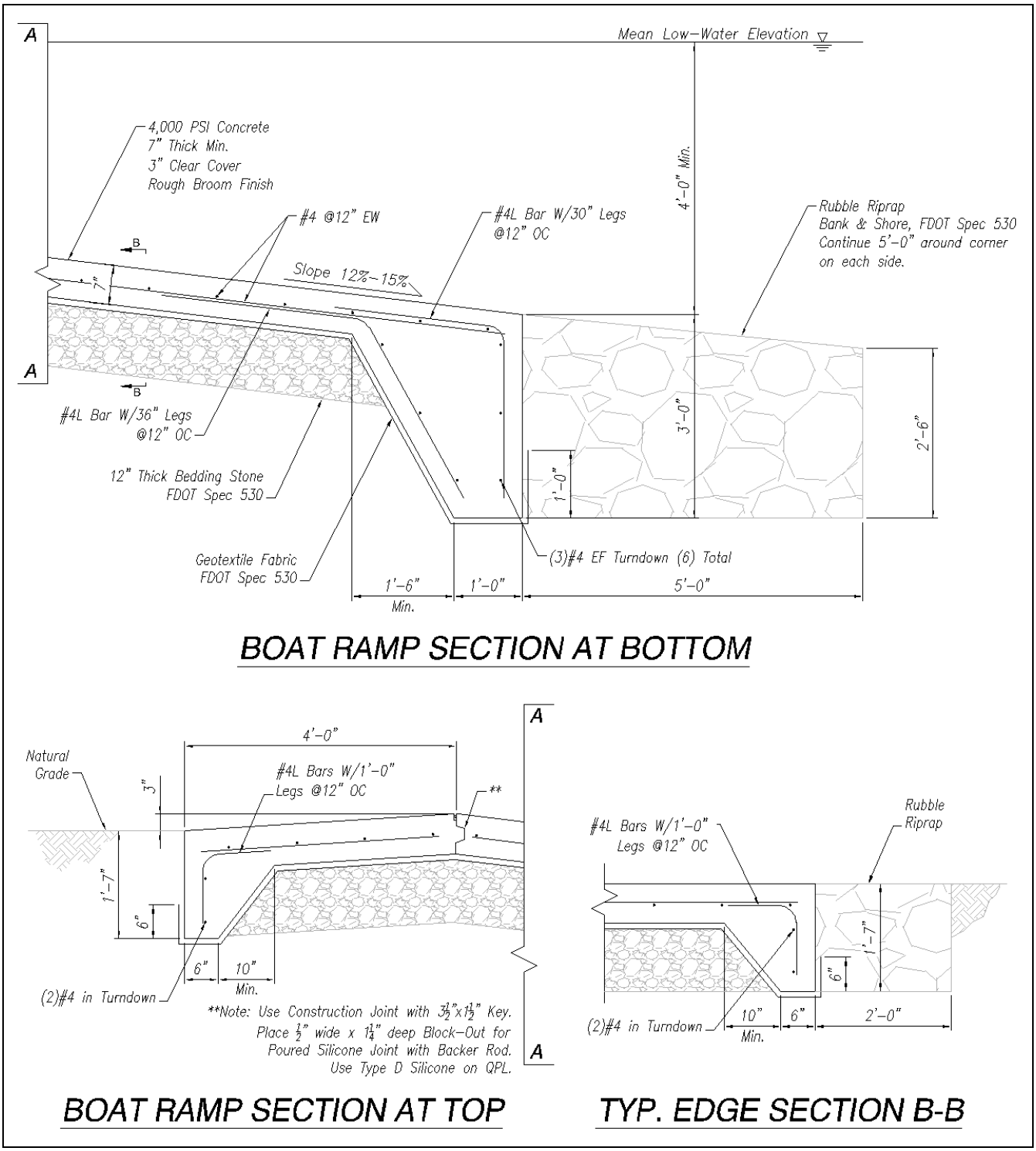

Figure 950-1001-1 – Concrete Boat Ramp Details

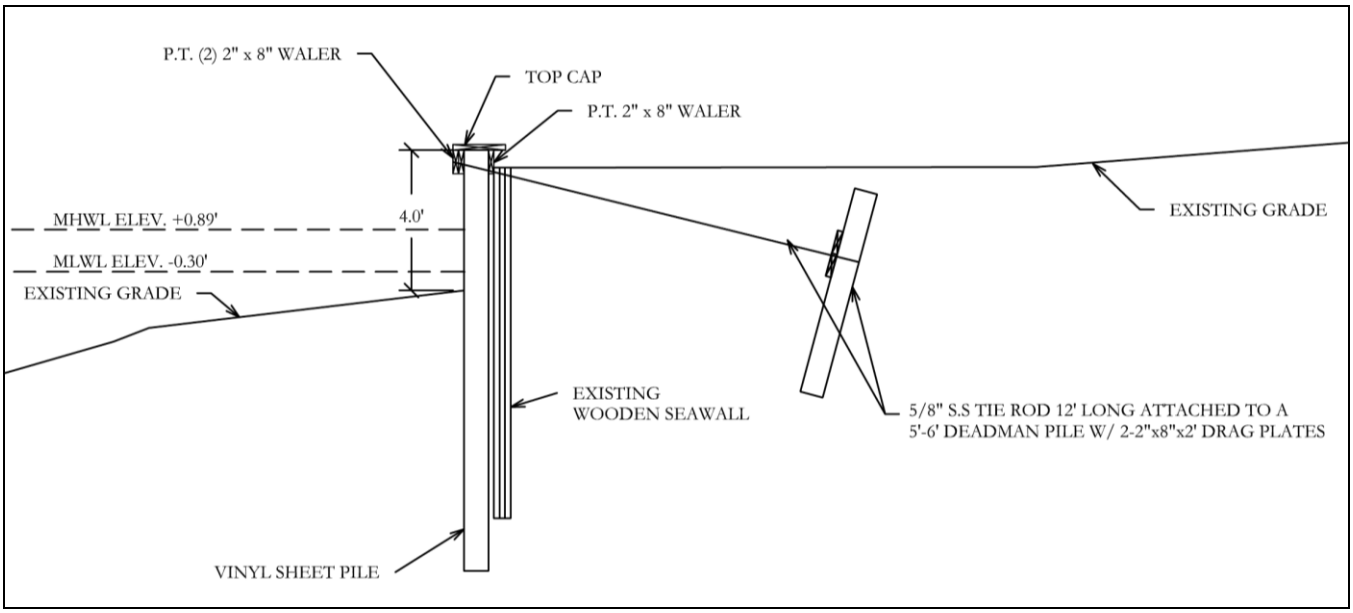

Figure 960-1001-1 – Vinyl Sheet Pile Seawall (Tied)

TIMBER PILES

1. PILES SHALL BE CUT FROM SOUTHERN PINE w/8" MINIMUM TIP.
2. ALL WALKWAY AND PLATFORM PILES SHALL BE DRIVEN TO A DEPTH OF 10'-0" BELOW THE MUD LINE.
3. PROTECT PILE HEADS USING CAPS, COLLARS OR SHOES AS REQUIRED DURING DRIVING TO DISTRIBUTE THE HAMMER BLOW OVER THE ENTIRE PILE CROSS SECTION AND PREVENT SPLITTING AND BROOMING.
4. SAW OFF THE TOPS OF ALL TIMBER PILES AT THE ELEVATION INDICATED IN THE PLANS.
5. THE FINAL POSITION OF THE PILE HEAD AT CUT-OFF ELEVATION SHALL BE NO MORE THAN 3" FROM THE PLAN POSITION INDICATED IN THE PLANS.
6. THE AXIAL ALIGNMENT OF THE DRIVEN PILES SHALL NOT DEVIATE MORE THAN .25"/FT FROM VERTICAL.

PRESERVATIVE TREATMENT

1. TO THE EXTENT POSSIBLE, ALL WOOD SHALL BE CUT, DRILLED, AND COMPLETELY FABRICATED PRIOR TO PRESSURE TREATMENT. WHEN FIELD FABRICATION OF WOOD IS REQUIRED OR IF WOOD IS DAMAGED, ALL CUTS, BORE HOLES, AND DAMAGE SHALL BE IMMEDIATELY FIELD TREATED WITH WOOD PRESERVATIEVE IN ACCORDANCE WITH AWPA STANDARDS.
2. ALL TIMBERS SHALL BE PRESSURE TREATED WITH CCA AT THE RATE OF 0.60 LBS/CU FT.
3. ALL PILES SHALL BE PRESSURE TREATED WITH CCA AT THE RATE OF 2.5 LBS/CU FT FOR SALTWATER USE.
4. ALL LUMBER SHALL BE TREATED IN ACCORDANCE WITH THE REQUIREMENTS OF AWPA STANDARDS AND ASTM D1760.
5. TREATED MATERIAL SHALL BE FREE OF EXCESS PRESERVATIVE ON THE WOOD SURFACE. THE TREATING PROCESS SHALL INCLUDE AN EXPANSION BATH, STEAMING AND /OR DRIPPING TO ENSURE THAT PRESERVATIVE WILL NOT BLEED.
7. TREATED WOOD SHALL BE INSPECTED AND CERTIFIED IN ACCORDANCE WITH AWPA STANDARDS.
8. THE TOPS OF PILES AND RAIL POSTS SHALL BE FLASHED, SEALED WITH ROOFING CEMENT OR OTHERWISE PROTECTED FROM DIRECT EXPOSURE TO THE WEATHER.

STEEL FASTENERS AND HARDWARE

1. TYPE 304 OR 316 STAINLESS STEEL SHALL BE USED FOR ALL FASTENERS AND CONNECTORS.
2. WASHERS SHALL BE PROVIDED UNDER BOLT AND LAG SCREW HEADS AND NUTS THAT ARE IN CONTACT WITH WOOD. WASHERS MAY BE OMITTED UNDER HEADS OF SPECIAL TIMBER BOLTS OR DOME HEAD BOLTS WHEN THE SIZE AND STRENGTH OF THE HEAD IS SUFFICIENT TO DEVELOP CONNECTION STRENGTH WITHOUT WOOD CRUSHING.

WOOD

1. DESIGN AND CONSTRUCT IN ACCORDANCE WITH THE NATIONAL DESIGN SPECIFICATION FOR WOOD CONSTRUCTION AND THE AMERICAN PLYWOOD ASSOCIATION.
2. WOOD SHALL BE NO. 2 SOUTHERN PINE OR BETTER MATCHING THE SIZES SHOWN ON THE PLANS, TYP U.O.N.
3. DECK BOARDS SHALL BE 2x6 RADIUS EDGE DECKING. ATTACH TO SUPPORTS w/(2) 3" SS DECK SCREWS. PROVIDE 1/4" SPACING BETWEEN BOARDS.

TYPICAL WALKWAY/DOCK, TERMINAL PLATFORMS AND KAYAK RAMP NOTES

Figure 970-1000-1 – Timber Walkway, Dock, and Ramp Notes

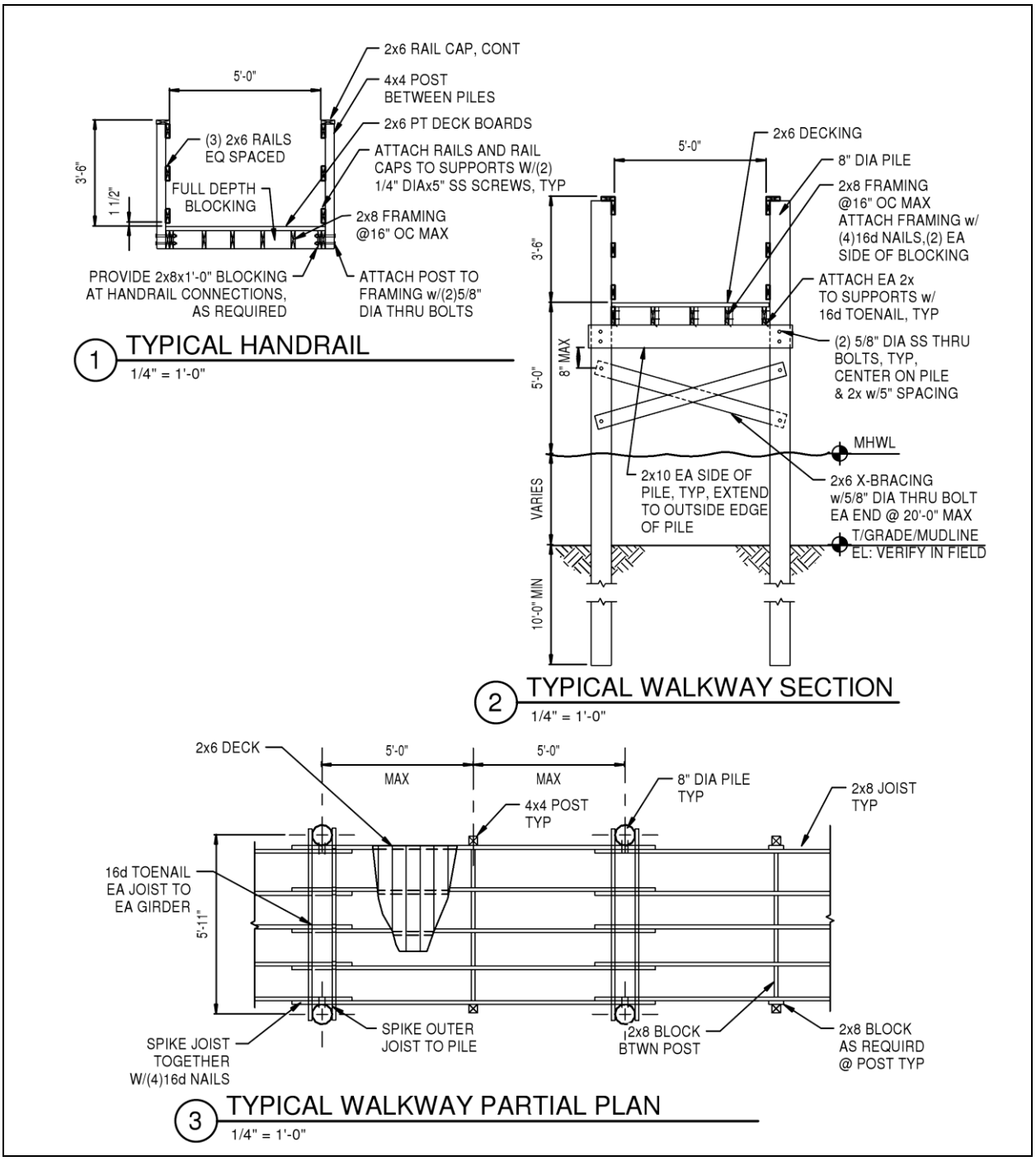

Figure 970-1001-1 – Timber Walkway (5' Wide)

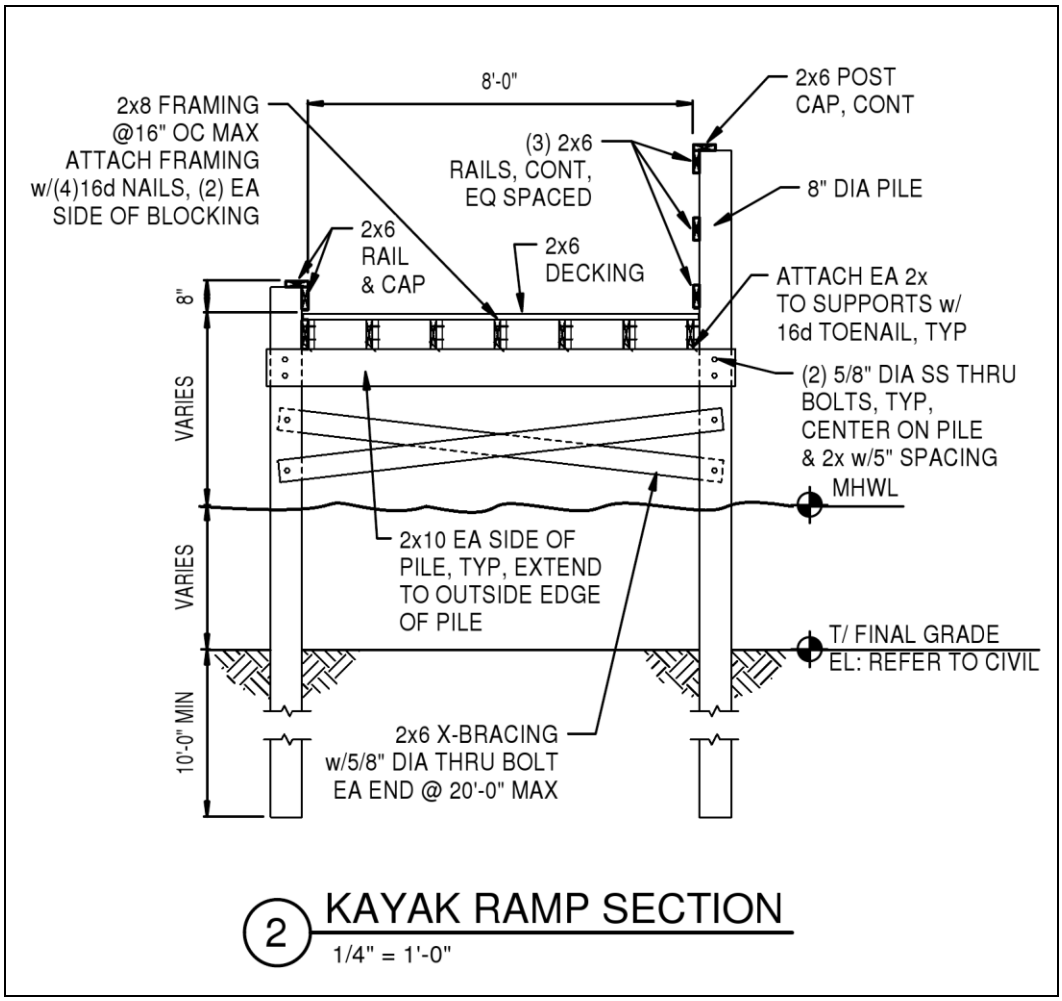

Figure 970-1002-1 – Kayak Ramp Section

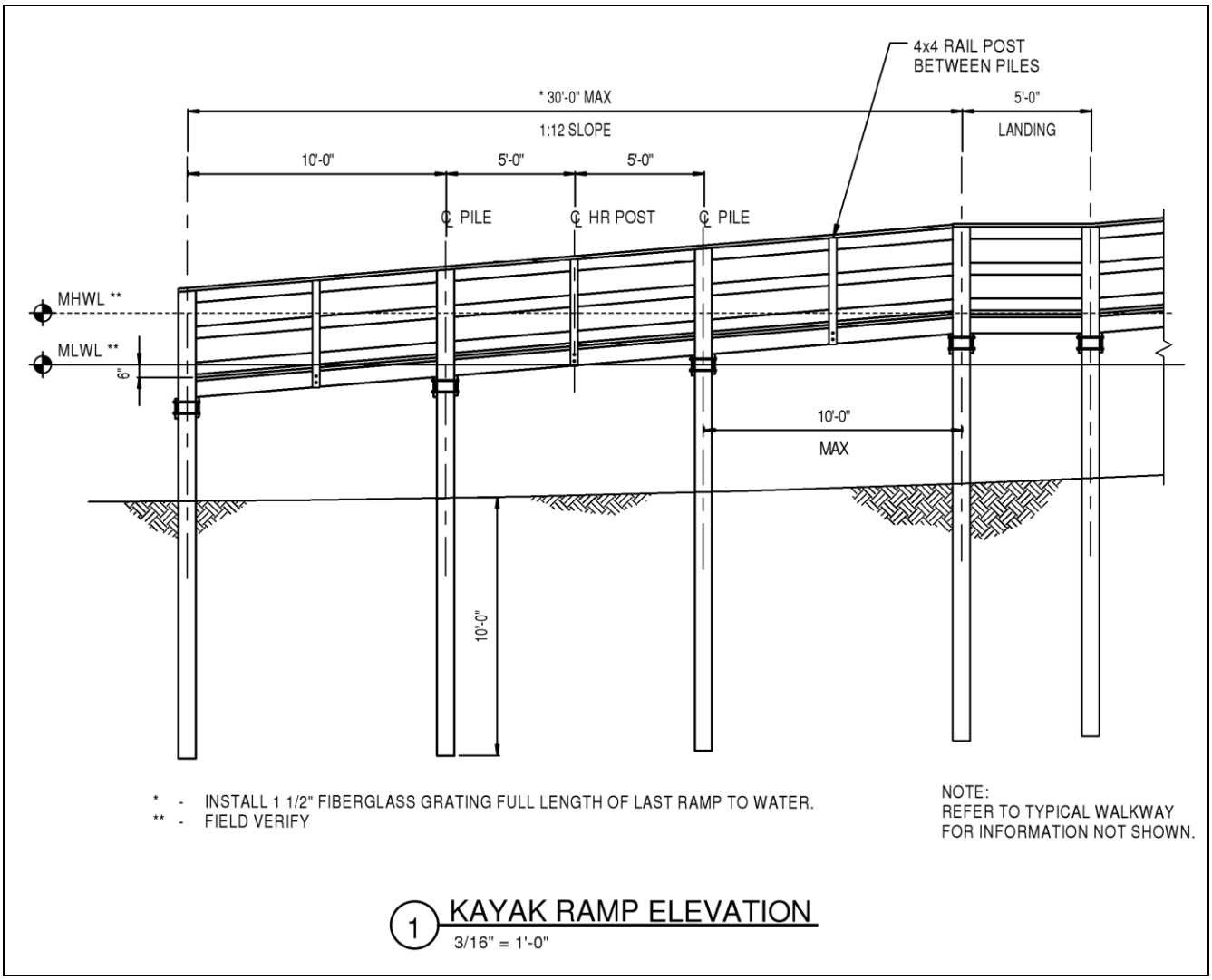

Figure 970-1002-2 – Kayak Ramp Elevation

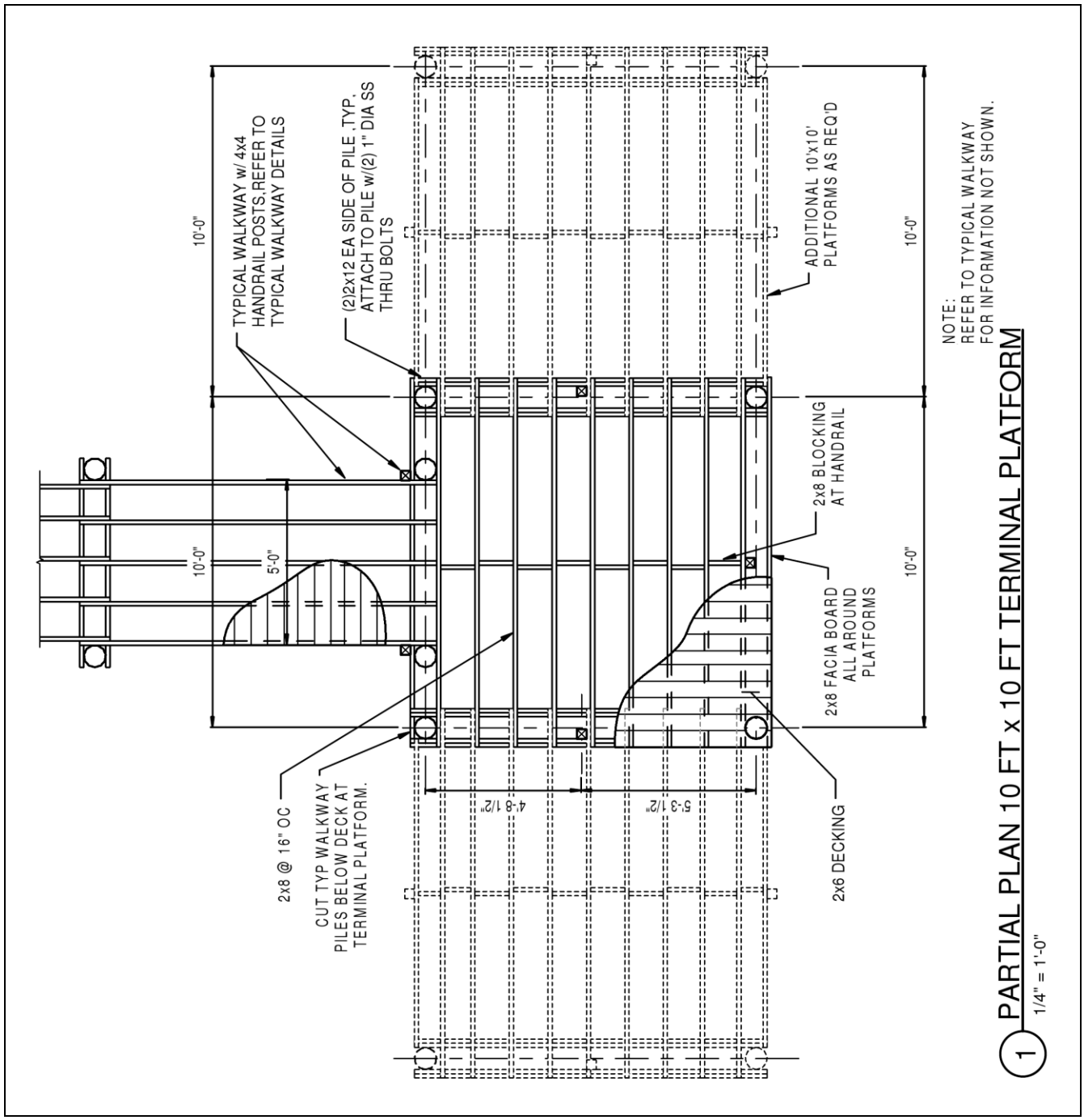

Figure 970-1003-1 – Timber Dock/Terminal Platform, 10’x10’

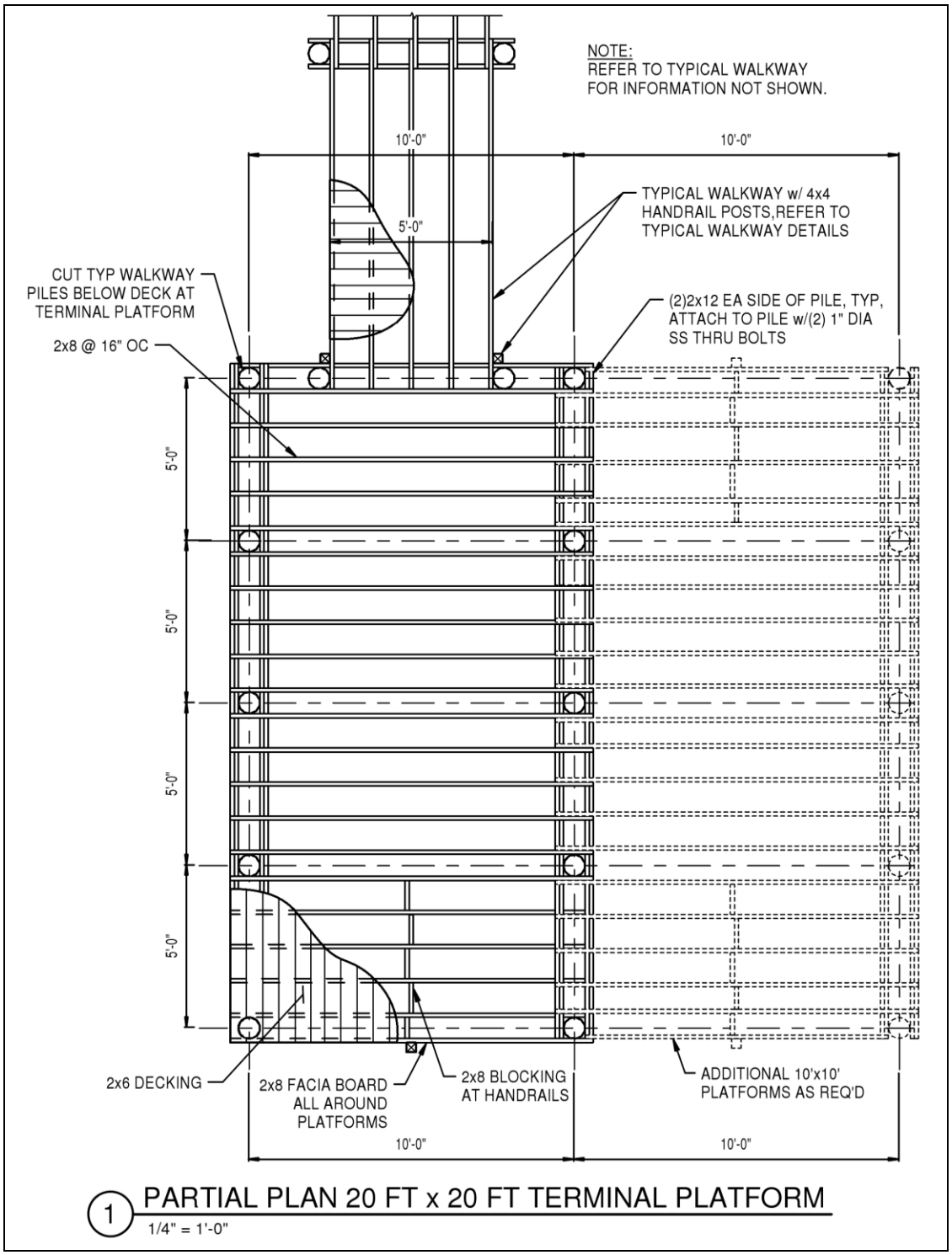

Figure 970-1004-1 – Timber Dock/Terminal Platform, 10’x20’

Escambia County Bridge, Dock and Boat Ramp Pricing Agreement
2012 Revisions

Section	Number	Bridge Maintenance and Repair	Units	Description of Revision
	General Performance Section 00001-1000			
00001-	1001	Performance Bond, per $1000 for total cost > $250,000	per $1000	Increased limit from $25,000 to $250,000
Mobilization Section 00000				
	Mobilization, Small Equipment Section 00010-1000			
00010-	1001	Mobilization, 0 - 15 Miles	EA	
00010-	1002	Mobilization, 16 - 30 Miles	EA	
00010-	1003	Mobilization, 31 - 45 Miles	EA	
00010-	1004	Mobilization, 46 + Miles	EA	
	Mobilization, Medium Equipment Section 00020-1000			
00020-	1001	Mobilization, 0 - 15 Miles	EA	
00020-	1002	Mobilization, 16 - 30 Miles	EA	
00020-	1003	Mobilization, 31 - 45 Miles	EA	
00020-	1004	Mobilization, 46 + Miles	EA	
	Mobilization, Heavy Equipment Section 00030-1000			
00030-	1001	Mobilization, 0 - 15 Miles	EA	
00030-	1002	Mobilization, 16 - 30 Miles	EA	
00030-	1003	Mobilization, 31 - 45 Miles	EA	
00030-	1004	Mobilization, 46 + Miles	EA	
	Mobilization, Barge Work Section 00040-1000			
00040-	1001	Mobilization, Small Equipment for general repairs	EA	
00040-	1002	Mobilization, Crane Required	EA	
00040-	1003	Mobilization, Crane and Concrete Required	EA	
Bridge Deck & Approach Joints Section 00100				
	Joint Maintenance Section 00110-1000			
00110-	1001	Clean-out Open Joint, (straight edges, deck only)	LF	
00110-	1002	Clean-out Finger Joint, (deck, trough, and drain lines)	LF	
00110-	1003	Tighten slide plate connection (at each loose location)	EA	
00110-	1004	Armored Angle Joint Repair	EA	
00110-	1005	Re-Seal Poured Silicone Joint	LF	
00110-	1006	Cushion Joint Anchorage Repair	LF	
00110-	1007	Compression Seal Anchorage Repair	LF	
	Joint Replacement Section 00120-1000			
00120-	1001	Replace open joint with Poured Silicone Sealant (1" wide)	LF	Decreased warranty period from 5 to 2 years for joints
00120-	1002	Replace open joint with Poured Silicone Sealant (2" wide)	LF	Decreased warranty period from 5 to 2 years for joints
00120-	1003	Replace poured joint with Poured Silicone Sealant (1" wide)	LF	Decreased warranty period from 5 to 2 years for joints
00120-	1004	Replace poured joint with Poured Silicone Sealant (2" wide)	LF	Decreased warranty period from 5 to 2 years for joints
00120-	1005	Replace open joint with Compression Seal (2" existing joint width)	LF	Decreased warranty period from 5 to 2 years for joints
00120-	1006	Replace open joint with Compression Seal (3" existing joint width)	LF	Decreased warranty period from 5 to 2 years for joints
00120-	1007	Replace poured joint with Compression Seal (2" existing joint width)	LF	Decreased warranty period from 5 to 2 years for joints
00120-	1008	Replace poured joint with Compression Seal (3" existing joint width)	LF	Decreased warranty period from 5 to 2 years for joints
00120-	1009	Replace Compression Seal (2" existing joint width)	LF	Decreased warranty period from 5 to 2 years for joints
00120-	1010	Replace Compression Seal (3" existing joint width)	LF	Decreased warranty period from 5 to 2 years for joints
00120-	1011	Add Asphalt Reflective Crack Joint, Poured Silicone	LF	
Bridge Deck & Approach Repair Section 00200				
	Timber Decks Section 00210-1000			
00210-	1001	General Timber Deck & Drain Cleaning	SF	
00210-	1002	Replace Timber Deck Plank (3"x10"x26') (Timber Stringers)	EA	
00210-	1003	Replace Timber Deck Plank (3"x10"x26') (Steel Stringers)	EA	
00210-	1004	Replace Timber Deck Plank (5"x10"x26') (Timber Stringers)	EA	
00210-	1005	Replace Timber Deck Plank (5"x10"x26') (Steel Stringers)	EA	
	Concrete Deck & Approach Slab Sealing Section 00220-1000			
00220-	1001	General Concrete Deck & Drain Cleaning	SF	
00220-	1002	Cleaning & Sealing Concrete Top & Side (Penetrant Sealer)	SF	
00220-	1003	Cleaning & Sealing Concrete Bottom (Penetrant Sealer)	SF	
00220-	1004	Cleaning & Sealing Concrete Top & Side (Methacrylate Monomer)	SF	
00220-	1005	Cleaning & Sealing Concrete Bottom (Methacrylate Monomer)	SF	
00220-	1006	Epoxy Injecting & Sealing Top & Side Cracks (labor)	LF	
00220-	1007	Epoxy Injecting & Sealing Bottom Cracks (labor)	LF	
	Concrete Deck & Approach Slab Patching Section 00230-1000			

Escambia County Bridge, Dock and Boat Ramp Pricing Agreement
2012 Revisions

Section	Number	Bridge Maintenance and Repair	Units	Description of Revision
00230-	1001	Concrete Top & Sides Patching (Type A) (Epoxy)	CF	
00230-	1002	Concrete Top & Sides Patching (Type A) (Polymer)	CF	
00230-	1003	Concrete Top & Sides Patching (Type B) (Polymer)	CF	
00230-	1004	Concrete Top & Sides Patching (Type B) (Grout)	CF	
00230-	1005	Concrete Deck Bottom Patching (Type A) (Epoxy)	CF	
00230-	1006	Concrete Deck Bottom Patching (Type A) (Polymer)	CF	
00230-	1007	Concrete Deck Bottom Patching (Type B) (Polymer)	CF	
00230-	1008	Concrete Deck Bottom Patching (Type B) (Grout)	CF	
00230-	1009	Concrete Deck Patching (Type C) (Grout)	CF	
00230-	1010	Concrete Deck Work for Beam Repair or Replacement	SF	
00230-	1011	General Concrete Repair Sidewalks and Curbs	CF	
00230-	1012	Concrete Repair, Post & Rail Barriers	CF	
00230-	1013	Concrete Repair, Jersey Type Barrier & Parapets	CF	
00230-	1014	Concrete Deck Repair Miscellaneous Reinforcing	LB	
00230-	1015	Drill & Epoxy Grout Deck Reinforcing	EA	Changed unit from LB to EA
00230-	1016	Saw Cut Existing Concrete for Demolition	LF	New Section
00230-	1017	Saw Cut Existing Concrete for Joint Sealant	LF	New Section
00230-	1018	Remove Existing Concrete	CY	New Section
00230-	1019	General Bridge Deck Concrete	CY	New Section
00230-	1020	General Flat Concrete Work	CY	New Section
	Bridge Deck Drainage Section 00240-1000			
00240-	1001	Clean & Flush Deck Drain Lines	LF	
00240-	1002	Replace Deck Drain Section (6"Ø Fiberglass)	LF	
00240-	1003	Add Deck Drain Extensions (6"Ø Fiberglass)	EA	
Bridge Deck Overlays Section 00300				
	Asphalt Patching and Removing Section 00310-1000			
00310-	1001	Remove Existing Asphalt (0"-2" thick)	SF	Changed unit from SY to SF
00310-	1002	Remove Existing Asphalt (2"-4" thick)	SF	Changed unit from SY to SF
00310-	1003	Remove Existing Asphalt (4"+ thick)	SF	Changed unit from SY to SF
00310-	1004	Saw cut Existing Asphalt	LF	
00310-	1005	Asphalt Overlay Patch (Polymer Modified Cold Asphalt)(0"-2" thick)	SF	Changed unit from SY to SF
00310-	1006	Asphalt Overlay Patch (Polymer Modified Cold Asphalt)(2"-4" thick)	SF	Changed unit from SY to SF
00310-	1007	Asphalt Overlay Patch (Polymer Modified Cold Asphalt)(4"+ thick)	SF	Changed unit from SY to SF
00310-	1008	Asphalt Overlay Patch (Rapid Hardening Mortar)(0"-2" thick)	SF	Changed unit from SY to SF
00310-	1009	Asphalt Overlay Patch (Rapid Hardening Mortar)(2"-4" thick)	SF	Changed unit from SY to SF
00310-	1010	Asphalt Overlay Patch (Rapid Hardening Mortar)(4"+ thick)	SF	Changed unit from SY to SF
	Asphalt Milling Section 00320-1000			
00320-	1001	Mill Existing Asphalt - 2" Thickness, (< 1500 SY)	SY	
00320-	1002	Mill Existing Asphalt - 2" Thickness, (> 1500 SY)	SY	
00320-	1003	Mill Existing Asphalt - 3" Thickness, (< 1500 SY)	SY	
00320-	1004	Mill Existing Asphalt - 3" Thickness, (> 1500 SY)	SY	
	New Deck Overlay Section 00330-1000			
00330-	1001	2" Thick Type SP 12.5 Asphalt (< 1500 SY)	SY	
00330-	1002	2" Thick Type SP 12.5 Asphalt (> 1500 SY)	SY	
00330-	1003	3" Thick Type SP 12.5 Asphalt (< 1500 SY)	SY	
00330-	1004	3" Thick Type SP 12.5 Asphalt (> 1500 SY)	SY	
00330-	1005	Concrete Deck Waterproofing Membrane	SY	
00330-	1006	Thin Polymer Overlay	SY	Changed warranty period from 5 to 2 years
Traffic Control & Signage Section 00400				
	Traffic Signage Section 00410-1000			
00410-	1001	Weight Limit Signs	EA	Changed from placing (4) signs to (1) sign
00410-	1002	Narrow Bridge Signs	LS	Changed unit to LS
00410-	1003	Relocate Traffic Signs	EA	New Section
00410-	1004	Bike Lane Ahead Sign, R3-16	EA	New Section
00410-	1005	Bike Lane Ends Sign, R3-16a	EA	New Section
00410-	1006	Regulatory Sign Black on White Metal Sign	EA	New Section
	Temporary Markings Section 00420-1000			
00420-	1001	Temporary 6" Solid Stripe, White or Yellow	LF	
00420-	1002	Temporary 6" 10-30 Skip Stripe, White or Yellow	LF	
00420-	1003	Temporary 6" 6-10 Skip Stripe, White or Yellow	LF	
	Thermoplastic Markings Section 00430-1000			
00430-	1001	Thermoplastic 6" Solid Stripe, White or Yellow	LF	

Escambia County Bridge, Dock and Boat Ramp Pricing Agreement
2012 Revisions

Section	Number	Bridge Maintenance and Repair	Units	Description of Revision
00430-	1002	Thermoplastic 6" 10-30 Skip Stripe, White or Yellow	LF	
00430-	1003	Thermoplastic 6" 6-10 Skip Stripe, White or Yellow	LF	
00430-	1004	Raised Retro-Reflective Pavement Markers	EA	
	Work Zone Safety & Control Section 00440-1000			
00440-	1001	Shut down lane (< 1000')	LS	
00440-	1002	Shut down lane (1000' +)	LS	
00440-	1003	Shut down lane for 2-way, 2-lane traffic (< 1000')	LS	
00440-	1004	Shut down lane for 2-way, 2-lane traffic (1000' +)	LS	
00440-	1005	Certified MOT Traffic Safety Plan	EA	New Section
00440-	1006	Type K Temporary Barrier (place & remove), FDOT Index 414	LF	
00440-	1007	Variable Message Sign	EA/Day	
00440-	1008	Black on Orange Warning Sign	EA/Day	
00440-	1009	Type I Barricade	EA/Day	New Section
00440-	1010	Type II Barricade	EA/Day	New Section
00440-	1011	Type III Barricade	EA/Day	
00440-	1012	Type A Low Intensity Flashing Lights	EA/Day	
00440-	1013	Type B Low Intensity Flashing Lights	EA/Day	
00440-	1014	36" Reflective Barrel / Drum	EA/Day	
00440-	1015	28" or Larger Reflective Striped Cone	EA/Day	New Section
00440-	1016	Flag Man - Day Work	EA/Day	New Section
00440-	1017	Flag Man - Night Work	EA/Day	New Section
Traffic Handrails & Guardrails Section 00500				
	Upgrade Handrail Section 00510-1000			
00510-	1001	Aluminum Pipe Handrail Picket for Pedestrians per FDOT Index 860	LF	
00510-	1002	Aluminum Pipe Handrail Picket for Bicycles per FDOT Index 860	LF	
	Upgrade Approach Guardrail Section 00520-1000			
00520-	1001	W-Beam Guardrail, FDOT Index 400	LF	
00520-	1002	Thrie-Beam Guardrail, FDOT Index 400	LF	
00520-	1003	Approach End Anchorage Assembly, Flared System, 37.5'	EA	
00520-	1004	Approach End Anchorage Assembly, Parallel System, 37.5'	EA	
00520-	1005	Guardrail Transition Section for Existing Bridge, FDOT Index 402	EA	
00520-	1006	Guardrail Transition Section for Existing Bridge, FDOT Index 403	EA	
00520-	1007	Guardrail Bridge Anchorage Assembly, FDOT Index 402	EA	
00520-	1008	Remove Existing Guardrail	LF	
	Retrofit Bridge Guardrail Section 00530-1000			
00530-	1001	Traffic Railing (Thrie Beam Retrofit) Narrow Curb, FDOT Index 471	LF	
00530-	1002	Traffic Railing (Thrie Beam Retrofit) Wide Strong Curb, Type 1, FDOT Index 472	LF	
00530-	1003	Traffic Railing (Thrie Beam Retrofit) Wide Strong Curb, Type 2, FDOT Index 473	LF	
00530-	1004	Traffic Railing (Thrie Beam Retrofit) Intermediate Curb, FDOT Index 474	LF	
00530-	1005	Traffic Railing (Thrie Beam Retrofit) Wide Curb, Type 1, FDOT Index 475	LF	
00530-	1006	Traffic Railing (Thrie Beam Retrofit) Wide Curb, Type 2, FDOT Index 476	LF	
	Metal Guardrail Miscellaneous Repair Section 00540-1000			
00540-	1001	Replace W-beam rail connection bolts (w-beam post)	EA	
00540-	1002	Replace W-beam rail connection bolts (concrete post)	EA	
00540-	1003	Replace Rail Post Connection to Bridge (concrete post to curb)	EA	
00540-	1004	Replace Rail Post Connection to Bridge (w-beam post to curb)	EA	
00540-	1005	Correct W-beam rail splice direction (per section)	EA	
00540-	1006	Guardrail Reflectors	EA	Corrected item name
00540-	1007	Paint Metal Rail System	LF	
Superstructure Repair Section 00600				
	Superstructure Cleaning & Painting Section 00610-1000			
00610-	1001	Cleaning bearings, bearing seats, bent/pier tops	SF	
00610-	1002	Cleaning Beams	SF	
00610-	1003	Spot Painting (inorganic zinc)	SF	
00610-	1004	Spot Painting (oil base)	SF	
	Bearing Maintenance & Repair Section 00620-1000			

Escambia County Bridge, Dock and Boat Ramp Pricing Agreement
2012 Revisions

Section	Number	Bridge Maintenance and Repair	Units	Description of Revision
00620-	1001	Jacking & Supporting Superstructure (30 ton lift)	EA	
00620-	1002	Jacking & Supporting Superstructure (60 ton lift)	EA	
00620-	1003	Re-set Elastomeric Bearing Pad	EA	
00620-	1004	Replace Composite Neoprene Elastomeric Bearing Pad	CF	
00620-	1005	Clean & Lubricate Steel Bearing Assembly	EA	
00620-	1006	Replace Steel Base Plate	LB	
00620-	1007	Add Bearing Keeper Plates	EA	
Concrete Beam & Girder Repair Section 00630-1000				Corrected numbering in Specification Guide
00630-	1001	Crack Repair (epoxy injection)	LF	
00630-	1002	Crack Repair (penetrant sealer)	LF	
00630-	1003	Concrete Repair (cementitious, vertical)	CF	
00630-	1004	Concrete Repair (cementitious, horizontal)	CF	
00630-	1005	Concrete Beam Repair Miscellaneous Reinforcing	LB	
00630-	1006	Drill & Epoxy Grout Beam Reinforcing	EA	Corrected unit
00630-	1007	Carbon Fiber Reinforcing	LF	
00630-	1008	Shear Crack Stitching	EA	
00630-	1009	Prestressed Tendon Splicing (GRABB-IT) (1/2" strand)	EA	Clarified strand length and chuck in Guide
00630-	1010	Sealing Concrete Superstructures (penetrant sealer)	SF	
Steel Beam Repair & Replacement Section 00640-1000				
00640-	1001	Welded Corrosion Repair	EA	Revised A50 to ASTM A-709 Grade 50 in Guide
00640-	1002	Bolted Corrosion Repair	EA	Revised A50 to ASTM A-709 Grade 50 in Guide
00640-	1003	Crack Repair	EA	Revised A50 to ASTM A-709 Grade 50 in Guide
00640-	1004	Welded Flange Cover Plate	EA	Revised A50 to ASTM A-709 Grade 50 in Guide
00640-	1005	Welded Shear Doubler Plate	EA	Revised A50 to ASTM A-709 Grade 50 in Guide
00640-	1006	Steel Beam Replacement	EA	
Timber Stringer Repair & Replacement Section 00650-1000				
00650-	1001	Add Timber Stringer (6"x12"x16')	EA	
00650-	1002	Replace Timber Stringer (6"x12"x16')	EA	
00650-	1003	Timber Stringer Splice (steel)	EA	
00650-	1004	Timber Stringer Splice (timber)	EA	
00650-	1005	Timber Stringer Scab (steel)	EA	
00650-	1006	Timber Stringer Scab (timber)	EA	
00650-	1007	Timber Stringer Clamping	EA	
00650-	1008	Timber Stringer Epoxy Crack Repair	LF	
00650-	1009	Timber Stringer Epoxy Section Build-Up	CF	
00650-	1010	Timber Superstructure Treating	LF	Removed water repellent, changed unit
00650-	1011	Timber Superstructure Sealing	LF	New Section
00650-	1012	Timber Stringer (6"x12"x16') Material Only	EA	New Section
Substructure Repair Section 00700				
Concrete Substructure Maintenance & Repair Section 00710-1000				
00710-	1001	Cleaning Concrete Substructure Elements	SF	
00710-	1002	Crack Repair (epoxy injection)(above water)	LF	
00710-	1003	Crack Repair (penetrant sealer)	LF	
00710-	1004	Crack Repair (cementitious, vertical)	CF	
00710-	1005	Crack Repair (cementitious, horizontal)	CF	
00710-	1006	Concrete Substructure Repair, Miscellaneous Reinforcing	LB	
00710-	1007	Drill & Epoxy Grout Substructure Reinforcing	EA	
00710-	1008	Carbon Fiber Reinforcing	LF	
00710-	1009	Temporary Support for Pile Cap Repair	EA	
00710-	1010	Prestressed Tendon Splicing (GRABB-IT) (1/2" strand)	EA	Clarified strand length and chuck in Guide
00710-	1011	Sealing Concrete Substructures (penetrant sealer)	SF	
00710-	1012	Reinforced Concrete Pile Jacket (14" square pile)	LF	Changed unit from EA to LF
00710-	1013	Reinforced Concrete Pile Jacket (18" square pile)	LF	Changed unit from EA to LF
00710-	1014	Reinforced Concrete Pile Jacket (24" square pile)	LF	Changed unit from EA to LF
00710-	1015	Fiberglass Pile Jacket Type 1 (14" square pile)	LF	Changed unit from EA to LF
00710-	1016	Fiberglass Pile Jacket Type 1 (18" square pile)	LF	Changed unit from EA to LF
00710-	1017	Fiberglass Pile Jacket Type 1 (24" square pile)	LF	Changed unit from EA to LF
00710-	1018	Fiberglass Pile Jacket Type 2 (18" square pile)	LF	Changed unit from EA to LF
00710-	1019	Fiberglass Pile Jacket Type 3 (18" square pile)	LF	Changed unit from EA to LF
00710-	1020	Fiberglass Pile Jacket Type 4 (18" square pile)	LF	Changed unit from EA to LF
00710-	1021	Fiberglass Pile Jacket Type 5 (18" square pile)	LF	Changed unit from EA to LF
00710-	1022	Fiberglass Pile Jacket Type 6 (18" square pile)	LF	Changed unit from EA to LF
00710-	1023	Corrugated Metal Pipe Pile Jacket (18" square pile)	LF	Changed unit from EA to LF
00710-	1024	Fabric Pile Jacket (18" square pile)	LF	Changed unit from EA to LF

Escambia County Bridge, Dock and Boat Ramp Pricing Agreement
2012 Revisions

Section	Number	Bridge Maintenance and Repair	Units	Description of Revision
00710-	1025	Fabric Pile Jacket (24" square pile)	LF	Changed unit from EA to LF
00710-	1026	Sacrificial Cathodic Protection (Reinforced Concrete)	EA	
00710-	1027	Sacrificial Cathodic Protection (Prestressed Concrete)	EA	
00710-	1028	Impressed Current Cathodic Protection Pile Jacket (Reinforced)	EA	
00710-	1029	Impressed Current Cathodic Protection Pile Jacket (Prestressed)	EA	
00710-	1030	Concrete Cathodic Protection (small)	EA	
00710-	1031	Underwater Epoxy Crack Repair (pressure injection)	LF	
00710-	1032	Underwater Concrete Repair	CY	
Steel Substructure Maintenance & Repair Section 00720-1000				
00720-	1001	Cleaning & Painting Steel Substructure (oil base)	SF	
00720-	1002	Cleaning & Painting Steel Substructure (coal-tar epoxy)	SF	
00720-	1003	Reinforced Concrete Pile Jacket (steel H-pile)	LF	Changed unit from EA to LF
00720-	1004	Fiberglass Pile Jacket Type 7 (steel H-pile)	LF	Changed unit from EA to LF
00720-	1005	Fiberglass Pile Jacket Type 8 (steel H-pile)	LF	Changed unit from EA to LF
00720-	1006	Corrugated Metal Pipe Pile Jacket (steel H-pile)	LF	Changed unit from EA to LF
00720-	1007	Fabric Pile Jacket (steel H-pile)	LF	Changed unit from EA to LF
00720-	1008	Cathodic Protection (small) (steel pile)	LS	Changed unit from EA to LS
00720-	1009	Cathodic Protection (large) (steel pile)	EA	
00720-	1010	Steel Pile Damage Repair (above water)	EA	
00720-	1011	Steel Pile Damage Repair (below water)	EA	
00720-	1012	Steel Supplemental Piles	EA	
00720-	1013	Steel Helper Bent	EA	
Timber Substructure Maintenance & Repair Section 00730-1000				
00730-	1001	Wood Liquid Preservative Surface Treatment	SF	
00730-	1002	Boron Salt Based Liquid Wood Preservative Treatment	SF	
00730-	1003	Liquid Wood Rot Hardener Treatment	GA	
00730-	1004	Substructure Wood Epoxy Repair	CF	
00730-	1005	Wood Epoxy Fiberglass Reinforcing	EA	
00730-	1006	Timber Pile Cap Replacement (12"x12"x24')	EA	
00730-	1007	Timber Pile Cap Scab (timber)	EA	
00730-	1008	Timber Pile Cap Scab (steel)	EA	
00730-	1009	Timber Pile Cap Clamping	EA	
00730-	1010	Add Timber Pile Cap Corbel Block (12"x12"x3')	EA	
00730-	1011	Ground Line Timber Pile Splice	EA	Change pile length from 30' to 10'
00730-	1012	Steel Sleeve Timber Pile Splice	EA	Change pile length and sleeve parameters.
00730-	1013	Abutment Timber Pile Splice	EA	New Detail
00730-	1014	Reinforced Concrete Pile Jacket (12" dia. timber)	LF	Changed unit from EA to LS
00730-	1015	Fiberglass Pile Jacket Type 1 (12" dia. timber)	LF	Changed unit from EA to LS
00730-	1016	Fiberglass Pile Jacket Type 2 (12" dia. timber)	LF	Changed unit from EA to LS
00730-	1017	Fiberglass Pile Jacket Type 3 (12" dia. timber)	LF	Changed unit from EA to LS
00730-	1018	Fiberglass Pile Jacket Type 4 (12" dia. timber)	LF	Changed unit from EA to LS
00730-	1019	Fiberglass Pile Jacket Type 5 (12" dia. timber)	LF	Changed unit from EA to LS
00730-	1020	Fiberglass Pile Jacket Type 6 (12" dia. timber)	LF	Changed unit from EA to LS
00730-	1021	Corrugated Metal Pipe Pile Jacket (12" dia. timber)	LF	Changed unit from EA to LS
00730-	1022	Fabric Pile Jacket (12" dia. timber)	LF	Changed unit from EA to LS
00730-	1023	Sikadur Pile Restoration System (12" dia. timber)	EA	
00730-	1024	Timber Pile Wedge Section Restoration	EA	
00730-	1025	Timber Pile, 30' Class B (cap support)	EA	Clarified included costs
00730-	1026	Timber Pile, 40' Class B (cap support)	EA	Clarified included costs
00730-	1027	Timber Pile, 50' Class B (cap support)	EA	Clarified included costs
00730-	1028	Timber Pile, 30' Class B (wingwall)	EA	
00730-	1029	Timber Pile, 40' Class B (wingwall)	EA	
00730-	1030	Timber Pile, 50' Class B (wingwall)	EA	
00730-	1031	Replace Timber Sway Bracing (3"x10"x26')	EA	
00730-	1032	Temporary Dewatering, Interior Bent, 4' deep	LF/day	Added additional products
00730-	1033	Temporary Dewatering, Interior Bent, 8' deep	LF/day	Added additional products
00730-	1034	Temporary Dewatering, Interior Bent, 12' deep	LF/day	Added additional products
Abutment & Approach Repair Section 00800				
Abutment & Wingwall Repair Section 00810-1000				
00810-	1001	Replace Backwall Timbers (3"x10"x6')	EA	
00810-	1002	Replace Backwall Timbers (3"x10"x24')	EA	
00810-	1003	Replace Wingwall Timbers (3"x10"x6')	EA	
00810-	1004	Replace Wingwall Timbers (3"x10"x16')	EA	
00810-	1005	Temporary Dewatering, Abutment, 4' deep	LF/day	Added additional products

Escambia County Bridge, Dock and Boat Ramp Pricing Agreement
2012 Revisions

Section	Number	Bridge Maintenance and Repair	Units	Description of Revision
00810-	1006	Temporary Dewatering, Abutment, 8' deep	LF/day	
00810-	1007	Temporary Dewatering, Abutment, 12' deep	LF/day	
00810-	1008	Grout Sealing Backwall Voids	CF	
00810-	1009	Temporary Steel Sheet Piles, Light Duty	SF	Revised required pile properties
00810-	1010	Temporary Steel Sheet Piles, Medium Duty	SF	Revised required pile properties
00810-	1011	Temporary Steel Sheet Piles, Heavy Duty	SF	Revised required pile properties
00810-	1012	Permanent Steel Sheet Piles, Light Duty	SF	Revised required pile properties
00810-	1013	Permanent Steel Sheet Piles, Medium Duty	SF	Revised required pile properties
00810-	1014	Permanent Steel Sheet Piles, Heavy Duty	SF	Revised required pile properties
00810-	1015	Permanent FRP Sheet Piles, Light Duty	SF	Revised required pile properties
00810-	1016	Permanent FRP Sheet Piles, Medium Duty	SF	Revised required pile properties
00810-	1017	Permanent Prestressed Soil Anchor	EA	
00810-	1018	Concrete Deadman Anchorage	EA	
00810-	1019	Rubble Riprap w/Filter Fabric & Bedding Stone (18" thick)	SY	New section
00810-	1020	Rubble Riprap w/Filter Fabric & Bedding Stone (30" thick)	SY	
00810-	1021	4" Bedding Stone and Filter Fabric	SY	New section
00810-	1022	Riprap Rubble, Bank and Shore	TN	New section
00810-	1023	Riprap Rubble, Ditch Lining	TN	New section
00810-	1024	Grout Fill Surface Voids	CY	
Approach Repair Section 00820-1000				
00820-	1001	Concrete Approach Slab	SF	
00820-	1002	Approach Slab Mudjacking	CY	
00820-	1003	Grout Fill Voids (under approaches)	CY	
00820-	1004	Earthwork Excavation by Machine	CY	
00820-	1005	Earthwork Excavation by Hand	CY	
00820-	1006	Earthwork Fill	CY	Revised Title
00820-	1007	Remove and Replace Unsuitable Materials	CY	
00820-	1008	Provide Fill Along Road Shoulder (Truck Measures)	CY	
00820-	1009	Earthwork Establishing Grade	SY	
00820-	1010	Re-establish Grade on Ditch	SY	
00820-	1011	Final grading and seal rolling prior to paving	SY	
00820-	1012	Stabilization Mat Type R-1	SY	
00820-	1013	Stabilization Mat Type R-2	SY	
00820-	1014	Seed & Mulch Road & Shoulders	SY	
00820-	1015	Erosion Mat with Seed & Mulch included in the mat	SY	Revised Title
00820-	1016	Sod, Staked, Argentine Bahia (< 1,000 SY)	SY	Revised Title
00820-	1017	Sod, Staked, Argentine Bahia (> 1,000 SY)	SY	Revised Title
00820-	1018	Clearing, Vegetation & Debris removal (trees < 12" dia.)	SY	Changed tree limit from 6" to 12"
00820-	1019	Remove Shrubs	EA	New section
00820-	1020	Remove Tree, less than 12"	EA	New section
00820-	1021	Remove Tree, 13"-24"	EA	New section
00820-	1022	Remove Tree, 25"-36"	EA	New section
00820-	1023	Dewatering, Bladder/Coffer Dam, 6' Depth	LF	New section
00820-	1024	Dewatering, Sheet Piles, 8' Depth	LF	New section
00820-	1025	Dewatering, Well Point	LF	New section
00820-	1026	Dewatering, Trench	LF	New section
00820-	1027	Dewatering Pump	Day	New section
Miscellaneous Section 00900				
Erosion Control Section 00910-1000				
00910-	1001	Silt Fence Type III, less than 500 LF	LF	
00910-	1002	Silt Fence Type III, over 500 LF	LF	
00910-	1003	Silt Fence Type IV, less than 500 LF	LF	
00910-	1004	Silt Fence Type IV, over 500 LF	LF	
00910-	1005	Staked Turbidity Barrier	LF	
00910-	1006	Floating Turbidity Barrier	LF	
00910-	1007	Safety Fence, less than 500 LF	LF	
00910-	1008	Safety Fence, over 500 LF	LF	
00910-	1009	Baled Hay or Straw	EA	
00910-	1010	Arrow Head	EA	
00910-	1011	Common Rush (Juncus Effusus)	EA	
00910-	1012	Needle Rush (Juncus Roemerianus)	EA	
00910-	1013	Pickerelweed (Pontenderia Cordata)	EA	
00910-	1014	Saltmeadow Cordgrass (Spartina Patens)	EA	
00910-	1015	Smooth Cordgrass (Spartina Alterniflora)	EA	

Escambia County Bridge, Dock and Boat Ramp Pricing Agreement
2012 Revisions

Section	Number	Bridge Maintenance and Repair	Units	Description of Revision
00910-	1016	Soft Stem Bulrush (Scripus Validus)	EA	
00910-	1017	Wild Rice (Zizania Aquatica)	EA	
00910-	1018	Certified Erosion Control Plan	EA	New section
00910-	1019	NPDES NOI and NOT Permit including SWPPP and Monitoring	EA	New section
Channel Repair Section 00920-1000				
00920-	1001	Remove Debris from Water	TN	
00920-	1002	Remove Debris from Land	TN	
00920-	1003	Scour Repair/Prevention, Rubble Riprap	TN	
00920-	1004	Scour Repair/Prevention, Gabions	TN	
00920-	1005	Scour Repair/Prevention, Underwater Concrete	CY	
00920-	1006	SUE Level A	EA	New section
00920-	1007	SUE Level B	LF	New section
Culvert Repair Section 00930-1000				
00930-	1001	Remove Sand, Silt, & Vegetation From Existing Culverts	CY	
00930-	1002	Clean Concrete Box Culvert	SF	
00930-	1003	Crack Repair (epoxy injection)(above water)	LF	
00930-	1004	Crack Repair (penetrant sealer)	LF	
00930-	1005	Concrete Repair (cementitious, vertical)	CF	
00930-	1006	Concrete Repair (cementitious, horizontal)	CF	
00930-	1007	Concrete Culvert Repair, Miscellaneous Reinforcing	LB	
00930-	1008	Drill & Epoxy Grout Culvert Reinforcing	EA	
00930-	1009	Sealing Concrete Culverts (penetrant sealer)	SF	
00930-	1010	Temporary Water Diversion, 4' deep	LF/day	Added additional products
00930-	1011	Temporary Water Diversion, 8' deep	LF/day	Added additional products
Fender System Repair Section 00940-1000				
00940-	1001	Steel Fender System Damage Replacement	EA	
00940-	1002	Fender System Walkway Replacement	LF	
Concrete Boat Ramp Section 00950-1000				
00950-	1001	Concrete Boat Ramp	SF	
00950-	1002	Temporary Dewatering, Boat Ramp, 4' deep	LF/day	Added additional products
00950-	1003	Temporary Dewatering, Boat Ramp, 8' deep	LF/day	Added additional products
00950-	1004	Temporary Dewatering, Boat Ramp, 12' deep	LF/day	Added additional products
Vinyl Sheet Pile Seawall Section 00960-1000				
00960-	1001	Vinyl Sheet Pile Seawall (Tied)	LF	
00960-	1002	Vinyl Sheet Pile Seawall (Cantilever)	LF	
Timber Pier Section 00970-1000				
00970-	1001	Timber Walkway (5' wide)	LF	
00970-	1002	Kayak Ramp	LF	
00970-	1003	Timber Dock/Terminal Platform, 10'x10'	EA	
00970-	1004	Timber Dock/Terminal Platform, 10'x20'	EA	

Escambia County
PD 12-13.001 Bridge, Dock and Boat Ramp P/A
Valid From 11/1/12 to 11/1/13

Section	Number	Bridge Maintenance and Repair	Quantity	Units	Contractor Name: Unit Price	Contractor Name: Extended Cost
	General Performance Section 00001-1000					
00001-	1001	Performance Bond, per $1000 for total cost > $250,000	0	per $1000	$0.00	$0.00
Mobilization Section 00000						
	Mobilization, Small Equipment Section 00010-1000					
00010-	1001	Mobilization, 0 - 15 Miles	0	EA	$0.00	$0.00
00010-	1002	Mobilization, 16 - 30 Miles	0	EA	$0.00	$0.00
00010-	1003	Mobilization, 31 - 45 Miles	0	EA	$0.00	$0.00
00010-	1004	Mobilization, 46 + Miles	0	EA	$0.00	$0.00
	Mobilization, Medium Equipment Section 00020-1000					
00020-	1001	Mobilization, 0 - 15 Miles	0	EA	$0.00	$0.00
00020-	1002	Mobilization, 16 - 30 Miles	0	EA	$0.00	$0.00
00020-	1003	Mobilization, 31 - 45 Miles	0	EA	$0.00	$0.00
00020-	1004	Mobilization, 46 + Miles	0	EA	$0.00	$0.00
	Mobilization, Heavy Equipment Section 00030-1000					
00030-	1001	Mobilization, 0 - 15 Miles	0	EA	$0.00	$0.00
00030-	1002	Mobilization, 16 - 30 Miles	0	EA	$0.00	$0.00
00030-	1003	Mobilization, 31 - 45 Miles	0	EA	$0.00	$0.00
00030-	1004	Mobilization, 46 + Miles	0	EA	$0.00	$0.00
	Mobilization, Barge Work Section 00040-1000					
00040-	1001	Mobilization, Small Equipment for general repairs	0	EA	$0.00	$0.00
00040-	1002	Mobilization, Crane Required	0	EA	$0.00	$0.00
00040-	1003	Mobilization, Crane and Concrete Required	0	EA	$0.00	$0.00
	Inspection Transportation & Access Section 00050-1000					
00050-	1001	Snooper Truck, 40 ft. Under Deck Reach, Mobilization	0	EA	$0.00	$0.00
00050-	1002	Snooper Truck, 40 ft. Under Deck Reach, Usage	0	HR	$0.00	$0.00
00050-	1003	Boat Mobilization	0	EA	$0.00	$0.00
00050-	1004	Boat Usage	0	HR	$0.00	$0.00
Bridge Deck & Approach Joints Section 00100						
	Joint Maintenance Section 00110-1000					
00110-	1001	Clean-out Open Joint, (straight edges, deck only)	0	LF	$0.00	$0.00
00110-	1002	Clean-out Finger Joint, (deck, trough, and drain lines)	0	LF	$0.00	$0.00
00110-	1003	Tighten slide plate connection (at each loose location)	0	EA	$0.00	$0.00
00110-	1004	Armored Angle Joint Repair	0	EA	$0.00	$0.00
00110-	1005	Re-Seal Poured Silicone Joint	0	LF	$0.00	$0.00
00110-	1006	Cushion Joint Anchorage Repair	0	LF	$0.00	$0.00
00110-	1007	Compression Seal Anchorage Repair	0	LF	$0.00	$0.00
	Joint Replacement Section 00120-1000					
00120-	1001	Replace open joint with Poured Silicone Sealant (1" wide)	0	LF	$0.00	$0.00
00120-	1002	Replace open joint with Poured Silicone Sealant (2" wide)	0	LF	$0.00	$0.00
00120-	1003	Replace poured joint with Poured Silicone Sealant (1" wide)	0	LF	$0.00	$0.00
00120-	1004	Replace poured joint with Poured Silicone Sealant (2" wide)	0	LF	$0.00	$0.00
00120-	1005	Replace open joint with Compression Seal (2" existing joint width)	0	LF	$0.00	$0.00
00120-	1006	Replace open joint with Compression Seal (3" existing joint width)	0	LF	$0.00	$0.00
00120-	1007	Replace poured joint with Compression Seal (2" existing joint width)	0	LF	$0.00	$0.00
00120-	1008	Replace poured joint with Compression Seal (3" existing joint width)	0	LF	$0.00	$0.00
00120-	1009	Replace Compression Seal (2" existing joint width)	0	LF	$0.00	$0.00
00120-	1010	Replace Compression Seal (3" existing joint width)	0	LF	$0.00	$0.00
00120-	1011	Add Asphalt Reflective Crack Joint, Poured Silicone	0	LF	$0.00	$0.00
Bridge Deck & Approach Repair Section 00200						
	Timber Decks Section 00210-1000					
00210-	1001	General Timber Deck & Drain Cleaning	0	SF	$0.00	$0.00
00210-	1002	Replace Timber Deck Plank (3"x10"x26') (Timber Stringers)	0	EA	$0.00	$0.00
00210-	1003	Replace Timber Deck Plank (3"x10"x26') (Steel Stringers)	0	EA	$0.00	$0.00
00210-	1004	Replace Timber Deck Plank (5"x10"x26') (Timber Stringers)	0	EA	$0.00	$0.00

Escambia County
PD 12-13.001 Bridge, Dock and Boat Ramp P/A
Valid From 11/1/12 to 11/1/13

Section	Number	Bridge Maintenance and Repair	Quantity	Units	Contractor Name: Unit Price	Contractor Name: Extended Cost
00210-	1005	Replace Timber Deck Plank (5"x10"x26') (Steel Stringers)	0	EA	$0.00	$0.00
		Concrete Deck & Approach Slab Sealing Section 00220-1000				
00220-	1001	General Concrete Deck & Drain Cleaning	0	SF	$0.00	$0.00
00220-	1002	Cleaning & Sealing Concrete Top & Side (Penetrant Sealer)	0	SF	$0.00	$0.00
00220-	1003	Cleaning & Sealing Concrete Bottom (Penetrant Sealer)	0	SF	$0.00	$0.00
00220-	1004	Cleaning & Sealing Concrete Top & Side (Methacrylate Monomer)	0	SF	$0.00	$0.00
00220-	1005	Cleaning & Sealing Concrete Bottom (Methacrylate Monomer)	0	SF	$0.00	$0.00
00220-	1006	Epoxy Injecting & Sealing Top & Side Cracks (labor)	0	LF	$0.00	$0.00
00220-	1007	Epoxy Injecting & Sealing Bottom Cracks (labor)	0	LF	$0.00	$0.00
		Concrete Deck & Approach Slab Patching Section 00230-1000				
00230-	1001	Concrete Top & Sides Patching (Type A) (Epoxy)	0	CF	$0.00	$0.00
00230-	1002	Concrete Top & Sides Patching (Type A) (Polymer)	0	CF	$0.00	$0.00
00230-	1003	Concrete Top & Sides Patching (Type B) (Polymer)	0	CF	$0.00	$0.00
00230-	1004	Concrete Top & Sides Patching (Type B) (Grout)	0	CF	$0.00	$0.00
00230-	1005	Concrete Deck Bottom Patching (Type A) (Epoxy)	0	CF	$0.00	$0.00
00230-	1006	Concrete Deck Bottom Patching (Type A) (Polymer)	0	CF	$0.00	$0.00
00230-	1007	Concrete Deck Bottom Patching (Type B) (Polymer)	0	CF	$0.00	$0.00
00230-	1008	Concrete Deck Bottom Patching (Type B) (Grout)	0	CF	$0.00	$0.00
00230-	1009	Concrete Deck Patching (Type C) (Grout)	0	CF	$0.00	$0.00
00230-	1010	Concrete Deck Work for Beam Repair or Replacement	0	SF	$0.00	$0.00
00230-	1011	General Concrete Repair Sidewalks and Curbs	0	CF	$0.00	$0.00
00230-	1012	Concrete Repair, Post & Rail Barriers	0	CF	$0.00	$0.00
00230-	1013	Concrete Repair, Jersey Type Barrier & Parapets	0	CF	$0.00	$0.00
00230-	1014	Concrete Deck Repair Miscellaneous Reinforcing	0	LB	$0.00	$0.00
00230-	1015	Drill & Epoxy Grout Deck Reinforcing	0	EA	$0.00	$0.00
00230-	1016	Saw Cut Existing Concrete for Demolition	0	LF	$0.00	$0.00
00230-	1017	Saw Cut Existing Concrete for Joint Sealant	0	LF	$0.00	$0.00
00230-	1018	Remove Existing Concrete	0	CY	$0.00	$0.00
00230-	1019	General Bridge Deck Concrete	0	CY	$0.00	$0.00
00230-	1020	General Flat Concrete Work	0	CY	$0.00	$0.00
		Bridge Deck Drainage Section 00240-1000				
00240-	1001	Clean & Flush Deck Drain Lines	0	LF	$0.00	$0.00
00240-	1002	Replace Deck Drain Section (6"Ø Fiberglass)	0	LF	$0.00	$0.00
00240-	1003	Add Deck Drain Extensions (6"Ø Fiberglass)	0	EA	$0.00	$0.00
Bridge Deck Overlays Section 00300						
		Asphalt Patching and Removing Section 00310-1000				
00310-	1001	Remove Existing Asphalt (0"-2" thick)	0	SF	$0.00	$0.00
00310-	1002	Remove Existing Asphalt (2"-4" thick)	0	SF	$0.00	$0.00
00310-	1003	Remove Existing Asphalt (4"+ thick)	0	SF	$0.00	$0.00
00310-	1004	Saw cut Existing Asphalt	0	LF	$0.00	$0.00
00310-	1005	Asphalt Overlay Patch (Polymer Modified Cold Asphalt)(0"-2" thick)	0	SF	$0.00	$0.00
00310-	1006	Asphalt Overlay Patch (Polymer Modified Cold Asphalt)(2"-4" thick)	0	SF	$0.00	$0.00
00310-	1007	Asphalt Overlay Patch (Polymer Modified Cold Asphalt)(4"+ thick)	0	SF	$0.00	$0.00
00310-	1008	Asphalt Overlay Patch (Rapid Hardening Mortar)(0"-2" thick)	0	SF	$0.00	$0.00
00310-	1009	Asphalt Overlay Patch (Rapid Hardening Mortar)(2"-4" thick)	0	SF	$0.00	$0.00
00310-	1010	Asphalt Overlay Patch (Rapid Hardening Mortar)(4"+ thick)	0	SF	$0.00	$0.00
		Asphalt Milling Section 00320-1000				
00320-	1001	Mill Existing Asphalt - 2" Thickness, (< 1500 SY)	0	SY	$0.00	$0.00
00320-	1002	Mill Existing Asphalt - 2" Thickness, (> 1500 SY)	0	SY	$0.00	$0.00
00320-	1003	Mill Existing Asphalt - 3" Thickness, (< 1500 SY)	0	SY	$0.00	$0.00
00320-	1004	Mill Existing Asphalt - 3" Thickness, (> 1500 SY)	0	SY	$0.00	$0.00
		New Deck Overlay Section 00330-1000				
00330-	1001	2" Thick Type SP 12.5 Asphalt (< 1500 SY)	0	SY	$0.00	$0.00
00330-	1002	2" Thick Type SP 12.5 Asphalt (> 1500 SY)	0	SY	$0.00	$0.00
00330-	1003	3" Thick Type SP 12.5 Asphalt (< 1500 SY)	0	SY	$0.00	$0.00
00330-	1004	3" Thick Type SP 12.5 Asphalt (> 1500 SY)	0	SY	$0.00	$0.00
00330-	1005	Concrete Deck Waterproofing Membrane	0	SY	$0.00	$0.00
00330-	1006	Thin Polymer Overlay	0	SY	$0.00	$0.00

Escambia County
PD 12-13.001 Bridge, Dock and Boat Ramp P/A
Valid From 11/1/12 to 11/1/13

Section	Number	Bridge Maintenance and Repair	Quantity	Units	Contractor Name: Unit Price	Contractor Name: Extended Cost
Traffic Control & Signage Section 00400						
	Traffic Signage Section 00410-1000					
00410-	1001	Weight Limit Signs	0	EA	$0.00	$0.00
00410-	1002	Narrow Bridge Signs	0	LS	$0.00	$0.00
00410-	1003	Relocate Traffic Signs	0	EA	$0.00	$0.00
00410-	1004	Bike Lane Ahead Sign, R3-16	0	EA	$0.00	$0.00
00410-	1005	Bike Lane Ends Sign, R3-16a	0	EA	$0.00	$0.00
00410-	1006	Regulatory Sign Black on White Metal Sign	0	EA	$0.00	$0.00
	Temporary Markings Section 00420-1000					
00420-	1001	Temporary 6” Solid Stripe, White or Yellow	0	LF	$0.00	$0.00
00420-	1002	Temporary 6” 10-30 Skip Stripe, White or Yellow	0	LF	$0.00	$0.00
00420-	1003	Temporary 6” 6-10 Skip Stripe, White or Yellow	0	LF	$0.00	$0.00
	Thermoplastic Markings Section 00430-1000					
00430-	1001	Thermoplastic 6” Solid Stripe, White or Yellow	0	LF	$0.00	$0.00
00430-	1002	Thermoplastic 6” 10-30 Skip Stripe, White or Yellow	0	LF	$0.00	$0.00
00430-	1003	Thermoplastic 6” 6-10 Skip Stripe, White or Yellow	0	LF	$0.00	$0.00
00430-	1004	Raised Retro-Reflective Pavement Markers	0	EA	$0.00	$0.00
	Work Zone Safety & Control Section 00440-1000					
00440-	1001	Shut down lane (< 1000')	0	LS	$0.00	$0.00
00440-	1002	Shut down lane (1000' +)	0	LS	$0.00	$0.00
00440-	1003	Shut down lane for 2-way, 2-lane traffic (< 1000')	0	LS	$0.00	$0.00
00440-	1004	Shut down lane for 2-way, 2-lane traffic (1000' +)	0	LS	$0.00	$0.00
00440-	1005	Certified MOT Traffic Safety Plan	0	EA	$0.00	$0.00
00440-	1006	Type K Temporary Barrier (place & remove), FDOT Index 414	0	LF	$0.00	$0.00
00440-	1007	Variable Message Sign	0	EA/Day	$0.00	$0.00
00440-	1008	Black on Orange Warning Sign	0	EA/Day	$0.00	$0.00
00440-	1009	Type I Barricade	0	EA/Day	$0.00	$0.00
00440-	1010	Type II Barricade	0	EA/Day	$0.00	$0.00
00440-	1011	Type III Barricade	0	EA/Day	$0.00	$0.00
00440-	1012	Type A Low Intensity Flashing Lights	0	EA/Day	$0.00	$0.00
00440-	1013	Type B Low Intensity Flashing Lights	0	EA/Day	$0.00	$0.00
00440-	1014	36" Reflective Barrel / Drum	0	EA/Day	$0.00	$0.00
00440-	1015	28" or Larger Reflective Striped Cone	0	EA/Day	$0.00	$0.00
00440-	1016	Flag Man - Day Work	0	EA/Day	$0.00	$0.00
00440-	1017	Flag Man - Night Work	0	EA/Day	$0.00	$0.00
Traffic Handrails & Guardrails Section 00500						
	Upgrade Handrail Section 00510-1000					
00510-	1001	Aluminum Pipe Handrail Picket for Pedestrians per FDOT Index 860	0	LF	$0.00	$0.00
00510-	1002	Aluminum Pipe Handrail Picket for Bicycles per FDOT Index 860	0	LF	$0.00	$0.00
	Upgrade Approach Guardrail Section 00520-1000					
00520-	1001	W-Beam Guardrail, FDOT Index 400	0	LF	$0.00	$0.00
00520-	1002	Thrie-Beam Guardrail, FDOT Index 400	0	LF	$0.00	$0.00
00520-	1003	Approach End Anchorage Assembly, Flared System, 37.5'	0	EA	$0.00	$0.00
00520-	1004	Approach End Anchorage Assembly, Parallel System, 37.5'	0	EA	$0.00	$0.00
00520-	1005	Guardrail Transition Section for Existing Bridge, FDOT Index 402	0	EA	$0.00	$0.00
00520-	1006	Guardrail Transition Section for Existing Bridge, FDOT Index 403	0	EA	$0.00	$0.00
00520-	1007	Guardrail Bridge Anchorage Assembly, FDOT Index 402	0	EA	$0.00	$0.00
00520-	1008	Remove Existing Guardrail	0	LF	$0.00	$0.00
	Retrofit Bridge Guardrail Section 00530-1000					
00530-	1001	Traffic Railing (Thrie Beam Retrofit) Narrow Curb, FDOT Index 471	0	LF	$0.00	$0.00
00530-	1002	Traffic Railing (Thrie Beam Retrofit) Wide Strong Curb, Type 1, FDOT Index 472	0	LF	$0.00	$0.00
00530-	1003	Traffic Railing (Thrie Beam Retrofit) Wide Strong Curb, Type 2, FDOT Index 473	0	LF	$0.00	$0.00
00530-	1004	Traffic Railing (Thrie Beam Retrofit) Intermediate Curb, FDOT Index 474	0	LF	$0.00	$0.00

Escambia County
PD 12-13.001 Bridge, Dock and Boat Ramp P/A
Valid From 11/1/12 to 11/1/13

					Contractor Name	
Section	**Number**	**Bridge Maintenance and Repair**	**Quantity**	**Units**	**Unit Price**	**Extended Cost**
00530-	1005	Traffic Railing (Thrie Beam Retrofit) Wide Curb, Type 1, FDOT Index 475	0	LF	$0.00	$0.00
00530-	1006	Traffic Railing (Thrie Beam Retrofit) Wide Curb, Type 2, FDOT Index 476	0	LF	$0.00	$0.00
	Metal Guardrail Miscellaneous Repair Section 00540-1000					
00540-	1001	Replace W-beam rail connection bolts (w-beam post)	0	EA	$0.00	$0.00
00540-	1002	Replace W-beam rail connection bolts (concrete post)	0	EA	$0.00	$0.00
00540-	1003	Replace Rail Post Connection to Bridge (concrete post to curb)	0	EA	$0.00	$0.00
00540-	1004	Replace Rail Post Connection to Bridge (w-beam post to curb)	0	EA	$0.00	$0.00
00540-	1005	Correct W-beam rail splice direction (per section)	0	EA	$0.00	$0.00
00540-	1006	Guardrail Reflectors	0	EA	$0.00	$0.00
00540-	1007	Paint Metal Rail System	0	LF	$0.00	$0.00
Superstructure Repair Section 00600						
	Superstructure Cleaning & Painting Section 00610-1000					
00610-	1001	Cleaning bearings, bearing seats, bent/pier tops	0	SF	$0.00	$0.00
00610-	1002	Cleaning Beams	0	SF	$0.00	$0.00
00610-	1003	Spot Painting (inorganic zinc)	0	SF	$0.00	$0.00
00610-	1004	Spot Painting (oil base)	0	SF	$0.00	$0.00
	Bearing Maintenance & Repair Section 00620-1000					
00620-	1001	Jacking & Supporting Superstructure (30 ton lift)	0	EA	$0.00	$0.00
00620-	1002	Jacking & Supporting Superstructure (60 ton lift)	0	EA	$0.00	$0.00
00620-	1003	Re-set Elastomeric Bearing Pad	0	EA	$0.00	$0.00
00620-	1004	Replace Composite Neoprene Elastomeric Bearing Pad	0	CF	$0.00	$0.00
00620-	1005	Clean & Lubricate Steel Bearing Assembly	0	EA	$0.00	$0.00
00620-	1006	Replace Steel Base Plate	0	LB	$0.00	$0.00
00620-	1007	Add Bearing Keeper Plates	0	EA	$0.00	$0.00
	Concrete Beam & Girder Repair Section 00630-1000					
00630-	1001	Crack Repair (epoxy injection)	0	LF	$0.00	$0.00
00630-	1002	Crack Repair (penetrant sealer)	0	LF	$0.00	$0.00
00630-	1003	Concrete Repair (cementitious, vertical)	0	CF	$0.00	$0.00
00630-	1004	Concrete Repair (cementitious, horizontal)	0	CF	$0.00	$0.00
00630-	1005	Concrete Beam Repair Miscellaneous Reinforcing	0	LB	$0.00	$0.00
00630-	1006	Drill & Epoxy Grout Beam Reinforcing	0	EA	$0.00	$0.00
00630-	1007	Carbon Fiber Reinforcing	0	LF	$0.00	$0.00
00630-	1008	Shear Crack Stitching	0	EA	$0.00	$0.00
00630-	1009	Prestressed Tendon Splicing (GRABB-IT) (1/2" strand)	0	EA	$0.00	$0.00
00630-	1010	Sealing Concrete Superstructures (penetrant sealer)	0	SF	$0.00	$0.00
	Steel Beam Repair & Replacement Section 00640-1000					
00640-	1001	Welded Corrosion Repair	0	EA	$0.00	$0.00
00640-	1002	Bolted Corrosion Repair	0	EA	$0.00	$0.00
00640-	1003	Crack Repair	0	EA	$0.00	$0.00
00640-	1004	Welded Flange Cover Plate	0	EA	$0.00	$0.00
00640-	1005	Welded Shear Doubler Plate	0	EA	$0.00	$0.00
00640-	1006	Steel Beam Replacement	0	EA	$0.00	$0.00
	Timber Stringer Repair & Replacement Section 00650-1000					
00650-	1001	Add Timber Stringer (6"x12"x16')	0	EA	$0.00	$0.00
00650-	1002	Replace Timber Stringer (6"x12"x16')	0	EA	$0.00	$0.00
00650-	1003	Timber Stringer Splice (steel)	0	EA	$0.00	$0.00
00650-	1004	Timber Stringer Splice (timber)	0	EA	$0.00	$0.00
00650-	1005	Timber Stringer Scab (steel)	0	EA	$0.00	$0.00
00650-	1006	Timber Stringer Scab (timber)	0	EA	$0.00	$0.00
00650-	1007	Timber Stringer Clamping	0	EA	$0.00	$0.00
00650-	1008	Timber Stringer Epoxy Crack Repair	0	LF	$0.00	$0.00
00650-	1009	Timber Stringer Epoxy Section Build-Up	0	CF	$0.00	$0.00
00650-	1010	Timber Superstructure Treating	0	LF	$0.00	$0.00
00650-	1011	Timber Superstructure Sealing	0	LF	$0.00	$0.00
00650-	1012	Timber Stringer (6"x12"x16') Material Only	0	EA	$0.00	$0.00
Substructure Repair Section 00700						

Escambia County
PD 12-13.001 Bridge, Dock and Boat Ramp P/A
Valid From 11/1/12 to 11/1/13

Section	Number	Bridge Maintenance and Repair	Quantity	Units	Contractor Name: Unit Price	Contractor Name: Extended Cost
Concrete Substructure Maintenance & Repair Section 00710-1000						
00710-	1001	Cleaning Concrete Substructure Elements	0	SF	$0.00	$0.00
00710-	1002	Crack Repair (epoxy injection)(above water)	0	LF	$0.00	$0.00
00710-	1003	Crack Repair (penetrant sealer)	0	LF	$0.00	$0.00
00710-	1004	Crack Repair (cementitious, vertical)	0	CF	$0.00	$0.00
00710-	1005	Crack Repair (cementitious, horizontal)	0	CF	$0.00	$0.00
00710-	1006	Concrete Substructure Repair, Miscellaneous Reinforcing	0	LB	$0.00	$0.00
00710-	1007	Drill & Epoxy Grout Substructure Reinforcing	0	EA	$0.00	$0.00
00710-	1008	Carbon Fiber Reinforcing	0	LF	$0.00	$0.00
00710-	1009	Temporary Support for Pile Cap Repair	0	EA	$0.00	$0.00
00710-	1010	Prestressed Tendon Splicing (GRABB-IT) (1/2" strand)	0	EA	$0.00	$0.00
00710-	1011	Sealing Concrete Substructures (penetrant sealer)	0	SF	$0.00	$0.00
00710-	1012	Reinforced Concrete Pile Jacket (14" square pile)	0	LF	$0.00	$0.00
00710-	1013	Reinforced Concrete Pile Jacket (18" square pile)	0	LF	$0.00	$0.00
00710-	1014	Reinforced Concrete Pile Jacket (24" square pile)	0	LF	$0.00	$0.00
00710-	1015	Fiberglass Pile Jacket Type 1 (14" square pile)	0	LF	$0.00	$0.00
00710-	1016	Fiberglass Pile Jacket Type 1 (18" square pile)	0	LF	$0.00	$0.00
00710-	1017	Fiberglass Pile Jacket Type 1 (24" square pile)	0	LF	$0.00	$0.00
00710-	1018	Fiberglass Pile Jacket Type 2 (18" square pile)	0	LF	$0.00	$0.00
00710-	1019	Fiberglass Pile Jacket Type 3 (18" square pile)	0	LF	$0.00	$0.00
00710-	1020	Fiberglass Pile Jacket Type 4 (18" square pile)	0	LF	$0.00	$0.00
00710-	1021	Fiberglass Pile Jacket Type 5 (18" square pile)	0	LF	$0.00	$0.00
00710-	1022	Fiberglass Pile Jacket Type 6 (18" square pile)	0	LF	$0.00	$0.00
00710-	1023	Corrugated Metal Pipe Pile Jacket (18" square pile)	0	LF	$0.00	$0.00
00710-	1024	Fabric Pile Jacket (18" square pile)	0	LF	$0.00	$0.00
00710-	1025	Fabric Pile Jacket (24" square pile)	0	LF	$0.00	$0.00
00710-	1026	Sacrificial Cathodic Protection (Reinforced Concrete)	0	EA	$0.00	$0.00
00710-	1027	Sacrificial Cathodic Protection (Prestressed Concrete)	0	EA	$0.00	$0.00
00710-	1028	Impressed Current Cathodic Protection Pile Jacket (Reinforced)	0	EA	$0.00	$0.00
00710-	1029	Impressed Current Cathodic Protection Pile Jacket (Prestressed)	0	EA	$0.00	$0.00
00710-	1030	Concrete Cathodic Protection (small)	0	EA	$0.00	$0.00
00710-	1031	Underwater Epoxy Crack Repair (pressure injection)	0	LF	$0.00	$0.00
00710-	1032	Underwater Concrete Repair	0	CY	$0.00	$0.00
Steel Substructure Maintenance & Repair Section 00720-1000						
00720-	1001	Cleaning & Painting Steel Substructure (oil base)	0	SF	$0.00	$0.00
00720-	1002	Cleaning & Painting Steel Substructure (coal-tar epoxy)	0	SF	$0.00	$0.00
00720-	1003	Reinforced Concrete Pile Jacket (steel H-pile)	0	LF	$0.00	$0.00
00720-	1004	Fiberglass Pile Jacket Type 7 (steel H-pile)	0	LF	$0.00	$0.00
00720-	1005	Fiberglass Pile Jacket Type 8 (steel H-pile)	0	LF	$0.00	$0.00
00720-	1006	Corrugated Metal Pipe Pile Jacket (steel H-pile)	0	LF	$0.00	$0.00
00720-	1007	Fabric Pile Jacket (steel H-pile)	0	LF	$0.00	$0.00
00720-	1008	Cathodic Protection (small) (steel pile)	0	LS	$0.00	$0.00
00720-	1009	Cathodic Protection (large) (steel pile)	0	EA	$0.00	$0.00
00720-	1010	Steel Pile Damage Repair (above water)	0	EA	$0.00	$0.00
00720-	1011	Steel Pile Damage Repair (below water)	0	EA	$0.00	$0.00
00720-	1012	Steel Supplemental Piles	0	EA	$0.00	$0.00
00720-	1013	Steel Helper Bent	0	EA	$0.00	$0.00
Timber Substructure Maintenance & Repair Section 00730-1000						
00730-	1001	Wood Liquid Preservative Surface Treatment	0	SF	$0.00	$0.00
00730-	1002	Boron Salt Based Liquid Wood Preservative Treatment	0	SF	$0.00	$0.00
00730-	1003	Liquid Wood Rot Hardener Treatment	0	GA	$0.00	$0.00
00730-	1004	Substructure Wood Epoxy Repair	0	CF	$0.00	$0.00
00730-	1005	Wood Epoxy Fiberglass Reinforcing	0	EA	$0.00	$0.00
00730-	1006	Timber Pile Cap Replacement (12"x12"x24')	0	EA	$0.00	$0.00
00730-	1007	Timber Pile Cap Scab (timber)	0	EA	$0.00	$0.00
00730-	1008	Timber Pile Cap Scab (steel)	0	EA	$0.00	$0.00
00730-	1009	Timber Pile Cap Clamping	0	EA	$0.00	$0.00
00730-	1010	Add Timber Pile Cap Corbel Block (12"x12"x3')	0	EA	$0.00	$0.00
00730-	1011	Ground Line Timber Pile Splice	0	EA	$0.00	$0.00
00730-	1012	Steel Sleeve Timber Pile Splice	0	EA	$0.00	$0.00

Escambia County
PD 12-13.001 Bridge, Dock and Boat Ramp P/A
Valid From 11/1/12 to 11/1/13

					Contractor Name	
Section	**Number**	**Bridge Maintenance and Repair**	**Quantity**	**Units**	**Unit Price**	**Extended Cost**
00730-	1013	Abutment Timber Pile Splice	0	EA	$0.00	$0.00
00730-	1014	Reinforced Concrete Pile Jacket (12" dia. timber)	0	LF	$0.00	$0.00
00730-	1015	Fiberglass Pile Jacket Type 1 (12" dia. timber)	0	LF	$0.00	$0.00
00730-	1016	Fiberglass Pile Jacket Type 2 (12" dia. timber)	0	LF	$0.00	$0.00
00730-	1017	Fiberglass Pile Jacket Type 3 (12" dia. timber)	0	LF	$0.00	$0.00
00730-	1018	Fiberglass Pile Jacket Type 4 (12" dia. timber)	0	LF	$0.00	$0.00
00730-	1019	Fiberglass Pile Jacket Type 5 (12" dia. timber)	0	LF	$0.00	$0.00
00730-	1020	Fiberglass Pile Jacket Type 6 (12" dia. timber)	0	LF	$0.00	$0.00
00730-	1021	Corrugated Metal Pipe Pile Jacket (12" dia. timber)	0	LF	$0.00	$0.00
00730-	1022	Fabric Pile Jacket (12" dia. timber)	0	LF	$0.00	$0.00
00730-	1023	Sikadur Pile Restoration System (12" dia. timber)	0	EA	$0.00	$0.00
00730-	1024	Timber Pile Wedge Section Restoration	0	EA	$0.00	$0.00
00730-	1025	Timber Pile, 30' Class B (cap support)	0	EA	$0.00	$0.00
00730-	1026	Timber Pile, 40' Class B (cap support)	0	EA	$0.00	$0.00
00730-	1027	Timber Pile, 50' Class B (cap support)	0	EA	$0.00	$0.00
00730-	1028	Timber Pile, 30' Class B (wingwall)	0	EA	$0.00	$0.00
00730-	1029	Timber Pile, 40' Class B (wingwall)	0	EA	$0.00	$0.00
00730-	1030	Timber Pile, 50' Class B (wingwall)	0	EA	$0.00	$0.00
00730-	1031	Replace Timber Sway Bracing (3"x10"x26')	0	EA	$0.00	$0.00
00730-	1032	Temporary Dewatering, Interior Bent, 4' deep	0	LF/day	$0.00	$0.00
00730-	1033	Temporary Dewatering, Interior Bent, 8' deep	0	LF/day	$0.00	$0.00
00730-	1034	Temporary Dewatering, Interior Bent, 12' deep	0	LF/day	$0.00	$0.00
Abutment & Approach Repair Section 00800						
	Abutment & Wingwall Repair Section 00810-1000					
00810-	1001	Replace Backwall Timbers (3"x10"x6')	0	EA	$0.00	$0.00
00810-	1002	Replace Backwall Timbers (3"x10"x24')	0	EA	$0.00	$0.00
00810-	1003	Replace Wingwall Timbers (3"x10"x6')	0	EA	$0.00	$0.00
00810-	1004	Replace Wingwall Timbers (3"x10"x16')	0	EA	$0.00	$0.00
00810-	1005	Temporary Dewatering, Abutment, 4' deep	0	LF/day	$0.00	$0.00
00810-	1006	Temporary Dewatering, Abutment, 8' deep	0	LF/day	$0.00	$0.00
00810-	1007	Temporary Dewatering, Abutment, 12' deep	0	LF/day	$0.00	$0.00
00810-	1008	Grout Sealing Backwall Voids	0	CF	$0.00	$0.00
00810-	1009	Temporary Steel Sheet Piles, Light Duty	0	SF	$0.00	$0.00
00810-	1010	Temporary Steel Sheet Piles, Medium Duty	0	SF	$0.00	$0.00
00810-	1011	Temporary Steel Sheet Piles, Heavy Duty	0	SF	$0.00	$0.00
00810-	1012	Permanent Steel Sheet Piles, Light Duty	0	SF	$0.00	$0.00
00810-	1013	Permanent Steel Sheet Piles, Medium Duty	0	SF	$0.00	$0.00
00810-	1014	Permanent Steel Sheet Piles, Heavy Duty	0	SF	$0.00	$0.00
00810-	1015	Permanent FRP Sheet Piles, Light Duty	0	SF	$0.00	$0.00
00810-	1016	Permanent FRP Sheet Piles, Medium Duty	0	SF	$0.00	$0.00
00810-	1017	Permanent Prestressed Soil Anchor	0	EA	$0.00	$0.00
00810-	1018	Concrete Deadman Anchorage	0	EA	$0.00	$0.00
00810-	1019	Rubble Riprap w/Filter Fabric & Bedding Stone (18" thick)	0	SY	$0.00	$0.00
00810-	1020	Rubble Riprap w/Filter Fabric & Bedding Stone (30" thick)	0	SY	$0.00	$0.00
00810-	1021	4" Bedding Stone and Filter Fabric	0	SY	$0.00	$0.00
00810-	1022	Riprap Rubble, Bank and Shore	0	TN	$0.00	$0.00
00810-	1023	Riprap Rubble, Ditch Lining	0	TN	$0.00	$0.00
00810-	1024	Grout Fill Surface Voids	0	CY	$0.00	$0.00
	Approach Repair Section 00820-1000					
00820-	1001	Concrete Approach Slab	0	SF	$0.00	$0.00
00820-	1002	Approach Slab Mudjacking	0	CY	$0.00	$0.00
00820-	1003	Grout Fill Voids (under approaches)	0	CY	$0.00	$0.00
00820-	1004	Earthwork Excavation by Machine	0	CY	$0.00	$0.00
00820-	1005	Earthwork Excavation by Hand	0	CY	$0.00	$0.00
00820-	1006	Earthwork Fill	0	CY	$0.00	$0.00
00820-	1007	Remove and Replace Unsuitable Materials	0	CY	$0.00	$0.00
00820-	1008	Provide Fill Along Road Shoulder (Truck Measures)	0	CY	$0.00	$0.00
00820-	1009	Earthwork Establishing Grade	0	SY	$0.00	$0.00
00820-	1010	Re-establish Grade on Ditch	0	SY	$0.00	$0.00

Escambia County
PD 12-13.001 Bridge, Dock and Boat Ramp P/A
Valid From 11/1/12 to 11/1/13

					Contractor Name	
Section	**Number**	**Bridge Maintenance and Repair**	**Quantity**	**Units**	**Unit Price**	**Extended Cost**
00820-	1011	Final grading and seal rolling prior to paving	0	SY	$0.00	$0.00
00820-	1012	Stabilization Mat Type R-1	0	SY	$0.00	$0.00
00820-	1013	Stabilization Mat Type R-2	0	SY	$0.00	$0.00
00820-	1014	Seed & Mulch Road & Shoulders	0	SY	$0.00	$0.00
00820-	1015	Erosion Mat with Seed & Mulch included in the mat	0	SY	$0.00	$0.00
00820-	1016	Sod, Staked, Argentine Bahia (< 1,000 SY)	0	SY	$0.00	$0.00
00820-	1017	Sod, Staked, Argentine Bahia (> 1,000 SY)	0	SY	$0.00	$0.00
00820-	1018	Clearing, Vegetation & Debris removal (trees < 12" dia.)	0	SY	$0.00	$0.00
00820-	1019	Remove Shrubs	0	EA	$0.00	$0.00
00820-	1020	Remove Tree, less than 12"	0	EA	$0.00	$0.00
00820-	1021	Remove Tree, 13"-24"	0	EA	$0.00	$0.00
00820-	1022	Remove Tree, 25"-36"	0	EA	$0.00	$0.00
00820-	1023	Dewatering, Bladder/Coffer Dam, 6' Depth	0	LF	$0.00	$0.00
00820-	1024	Dewatering, Sheet Piles, 8' Depth	0	LF	$0.00	$0.00
00820-	1025	Dewatering, Well Point	0	LF	$0.00	$0.00
00820-	1026	Dewatering, Trench	0	LF	$0.00	$0.00
00820-	1027	Dewatering Pump	0	Day	$0.00	$0.00
Miscellaneous Section 00900						
	Erosion Control Section 00910-1000					
00910-	1001	Silt Fence Type III, less than 500 LF	0	LF	$0.00	$0.00
00910-	1002	Silt Fence Type III, over 500 LF	0	LF	$0.00	$0.00
00910-	1003	Silt Fence Type IV, less than 500 LF	0	LF	$0.00	$0.00
00910-	1004	Silt Fence Type IV, over 500 LF	0	LF	$0.00	$0.00
00910-	1005	Staked Turbidity Barrier	0	LF	$0.00	$0.00
00910-	1006	Floating Turbidity Barrier	0	LF	$0.00	$0.00
00910-	1007	Safety Fence, less than 500 LF	0	LF	$0.00	$0.00
00910-	1008	Safety Fence, over 500 LF	0	LF	$0.00	$0.00
00910-	1009	Baled Hay or Straw	0	EA	$0.00	$0.00
00910-	1010	Arrow Head	0	EA	$0.00	$0.00
00910-	1011	Common Rush (Juncus Effusus)	0	EA	$0.00	$0.00
00910-	1012	Needle Rush (Juncus Roemerianus)	0	EA	$0.00	$0.00
00910-	1013	Pickerelweed (Pontenderia Cordata)	0	EA	$0.00	$0.00
00910-	1014	Saltmeadow Cordgrass (Spartina Patens)	0	EA	$0.00	$0.00
00910-	1015	Smooth Cordgrass (Spartina Alterniflora)	0	EA	$0.00	$0.00
00910-	1016	Soft Stem Bulrush (Scripus Validus)	0	EA	$0.00	$0.00
00910-	1017	Wild Rice (Zizania Aquatica)	0	EA	$0.00	$0.00
00910-	1018	Certified Erosion Control Plan	0	EA	$0.00	$0.00
00910-	1019	NPDES NOI and NOT Permit including SWPPP and Monitoring	0	EA	$0.00	$0.00
	Channel Repair Section 00920-1000					
00920-	1001	Remove Debris from Water	0	TN	$0.00	$0.00
00920-	1002	Remove Debris from Land	0	TN	$0.00	$0.00
00920-	1003	Scour Repair/Prevention, Rubble Riprap	0	TN	$0.00	$0.00
00920-	1004	Scour Repair/Prevention, Gabions	0	TN	$0.00	$0.00
00920-	1005	Scour Repair/Prevention, Underwater Concrete	0	CY	$0.00	$0.00
00920-	1006	SUE Level A	0	EA	$0.00	$0.00
00920-	1007	SUE Level B	0	LF	$0.00	$0.00
	Culvert Repair Section 00930-1000					
00930-	1001	Remove Sand, Silt, & Vegetation From Existing Culverts	0	CY	$0.00	$0.00
00930-	1002	Clean Concrete Box Culvert	0	SF	$0.00	$0.00
00930-	1003	Crack Repair (epoxy injection)(above water)	0	LF	$0.00	$0.00
00930-	1004	Crack Repair (penetrant sealer)	0	LF	$0.00	$0.00
00930-	1005	Concrete Repair (cementitious, vertical)	0	CF	$0.00	$0.00
00930-	1006	Concrete Repair (cementitious, horizontal)	0	CF	$0.00	$0.00
00930-	1007	Concrete Culvert Repair, Miscellaneous Reinforcing	0	LB	$0.00	$0.00
00930-	1008	Drill & Epoxy Grout Culvert Reinforcing	0	EA	$0.00	$0.00
00930-	1009	Sealing Concrete Culverts (penetrant sealer)	0	SF	$0.00	$0.00
00930-	1010	Temporary Water Diversion, 4' deep	0	LF/day	$0.00	$0.00
00930-	1011	Temporary Water Diversion, 8' deep	0	LF/day	$0.00	$0.00
	Fender System Repair Section 00940-1000					

Escambia County
PD 12-13.001 Bridge, Dock and Boat Ramp P/A
Valid From 11/1/12 to 11/1/13

Section	Number	Bridge Maintenance and Repair	Quantity	Units	Contractor Name: Unit Price	Contractor Name: Extended Cost
00940-	1001	Steel Fender System Damage Replacement	0	EA	$0.00	$0.00
00940-	1002	Fender System Walkway Replacement	0	LF	$0.00	$0.00
Concrete Boat Ramp Section 00950-1000						
00950-	1001	Concrete Boat Ramp	0	SF	$0.00	$0.00
00950-	1002	Temporary Dewatering, Boat Ramp, 4' deep	0	LF/day	$0.00	$0.00
00950-	1003	Temporary Dewatering, Boat Ramp, 8' deep	0	LF/day	$0.00	$0.00
00950-	1004	Temporary Dewatering, Boat Ramp, 12' deep	0	LF/day	$0.00	$0.00
Vinyl Sheet Pile Seawall Section 00960-1000						
00960-	1001	Vinyl Sheet Pile Seawall (Tied)	0	LF	$0.00	$0.00
00960-	1002	Vinyl Sheet Pile Seawall (Cantilever)	0	LF	$0.00	$0.00
Timber Pier Section 00970-1000						
00970-	1001	Timber Walkway (5' wide)	0	LF	$0.00	$0.00
00970-	1002	Kayak Ramp	0	LF	$0.00	$0.00
00970-	1003	Timber Dock/Terminal Platform, 10'x10'	0	EA	$0.00	$0.00
00970-	1002	Timber Dock/Terminal Platform, 10'x20'	0	EA	$0.00	$0.00
Pervious Concrete Pavement Section 00980-1000						
00980-	1001	Pervious Concrete Pavement, 6" thick	0	SY	$0.00	$0.00
				Sub Total		$0.00
		Balance of Line (BOL)	**Quantity**	**Units**		
			0		$0.00	$0.00
			0		$0.00	$0.00
			0		$0.00	$0.00
			0		$0.00	$0.00
			0		$0.00	$0.00
				Total BOL		$0.00
				Grand Total		**$0.00**

(1-10) STANDARD CONSTRUCTION CONTRACT DOCUMENTS

FOR

AGREEMENT BETWEEN ESCAMBIA COUNTY

AND

_____

FORM I: Bridges, Docks and Boat Ramps

AGREEMENT

This is an Agreement between Escambia County, a political subdivision of the State of Florida, by and through its Board of County Commissioners, its successors and assigns, with its administrative offices located at 221 Palafox Place, Pensacola, Florida 32501, (hereinafter referred to as "County,") and _ _____, a for-profit corporation, authorized to do business in the State of Florida, its successors and assigns, whose federal identification number is __ _____, and whose business address is,_____, (hereinafter referred to as "Contractor").

WITNESSETH:

NOW, THEREFORE, in consideration of the mutual terms and conditions, promises, covenants and payments hereinafter set forth, the County and the Contractor agree as follows:

SECTION 1. CONTRACT DOCUMENTS.

1.1 The Contract Documents include this Agreement, including Amendments and Exhibits, the Exhibits described in Section 6, Change Orders, Work Directive Changes, Field Orders and the solicitation documents, including addenda. The Contract Documents are incorporated by reference and made a part of this Agreement. A copy of all Contract Documents shall be maintained by Contractor at the Project site at all times during the performance of any Work performed pursuant to this Agreement.

1.2 In case of any inconsistency or conflict among the provisions of this Agreement and any other terms and conditions of any documents comprising the Contract Documents, the provisions of the Agreement shall control. Concerning the Contract Documents, the order of precedence shall be as follows: 1) the Agreement, including Amendments and Exhibits; 2) Change Orders; 3) Work Directive Changes; 4) Field Orders; 5) the Solicitation Documents, including addenda. The Contract Documents listed above represent the entire and integrated agreement between the parties hereto, and supersede prior negotiations, representations, or agreements, either written or oral.

SECTION 2. SCOPE OF WORK

2.1 Contractor agrees to furnish and pay for all management, supervision, financing, labor, materials, tools, fuel, supplies, utilities, equipment and services of every kind and type necessary to diligently, timely, and fully perform and complete in a good workmanlike manner the Scope of Work assigned to the Contractor.

2.2 The basic Scope of Work to be performed under this Agreement is to provide for "Miscellaneous Bridge, Dock, and Boat Ramp repairs and construction" for projects within Escambia County, Florida, per the Florida Department of Transportation "Standard Specifications for Road and Bridge Construction" (current edition) and the "Escambia County Bridge, Dock, and Boat Ramp Specification Guide" (current edition) and, unless

otherwise specifically excluded from any particular purchase order, all Work shall comport with County guidelines for construction, rehabilitation and renovation of projects, and local ordinances, State, and Federal laws and regulations.

SECTION 3. <u>ORDERING OF THE WORK</u>

3.1 The Contractor is one of several firms selected to perform work on same or similar terms pursuant to this Agreement. The County expressly reserves the exclusive right to assign specific purchase orders to the firm it deems best suited for the type of work to be accomplished. This Agreement does not guarantee any amount or type of work to be assigned to the Contractor.

3.2 When requested by the County, the Contractor will provide a bid to the County to perform the work requested under a scope of work, and the County shall select the most responsive bidder to perform the work.

3.3 The County will issue a purchase order to the Contractor which describes the work to be provided by the Contractor and the amount of compensation to be provided by the County.

SECTION 4. <u>BONDS</u>.

4.1 Where the Contract Amount is in excess of $250,000.00 and/or at the County's request, Contractor shall provide at its expense Performance and Payment Bonds, in the form prescribed in Exhibit B, in the amount of 100% of the Contract Amount. The Performance and Payment Bonds shall be underwritten by a surety authorized to do business in the State of Florida and otherwise acceptable to County; provided; however, the surety shall be rated as "A-" (excellent) or better as to general policy holders rating and Class V or higher rating as to financial size category and the amount required shall not exceed 5% of the reported policy holder's surplus, all as reported in the most current Best Key Rating Guide, published by A.M. Best Company, Inc. of 75 Fulton Street, New York, New York 10038.

4.2 If the surety for any bond furnished by Contractor is declared bankrupt, becomes insolvent, its right to do business is terminated in the State of Florida, or it ceases to meet the requirements imposed by the Contract Document, the Contractor shall, within five (5) calendar days thereafter, substitute another bond and surety, both of which shall be subject to the County's approval. Failure by Contractor to maintain its bonds in full force and effect at all times, including the warranty period, shall be grounds for termination of this Contract.

4.3 As per Florida Statutes Section 255.05, the Contractor shall be required to execute and record the Performance and Payment bonds. The bonds must state the name and principal business address of both the Principal and the Surety and a description of the project sufficient to identify it. (The filing costs are $10.00 for the first page and $8.50 for each remaining page).

SECTION 5. CONTRACT TIME AND LIQUIDATED DAMAGES.

5.1 Time is of the essence in the performance of any Work assigned under this Agreement. Contractor shall commence the Work within ten (10) calendar days from the Commencement Date, established in the Notice to Proceed. No Work shall be performed at a Project site prior to the Commencement Date. Contractor shall provide 48 hours notice prior to beginning Work.

5.2 County and Contractor recognize that, since time is of the essence for this Agreement, the County will suffer financial loss if Work is not substantially completed within the time specified. Should Contractor fail to substantially complete the Work within the agreed time period, County shall be entitled to assess, as liquidated damages, but not as a penalty, **$**_____ for each calendar day thereafter until substantial completion is achieved. The Project shall be deemed to be substantially completed by the County on the date that the County's representative certifies in writing that the construction of the Project, or specified part thereof, is sufficiently completed in accordance with the Contract Documents, so that the Project or specified part can be utilized for the purposes for which it is intended. Along with such certification, the Architect shall compile a "punch list" of any remaining exceptions that do not adversely affect the use of the Project. Completion of these items will be required prior to final payment.

5.3 Contractor hereby expressly waives and relinquishes any right which it may have to seek to characterize the above noted liquidated damages as a penalty, which the parties agree represents a fair and reasonable estimate of the County's actual damages at the time of contracting if Contractor fails to substantially complete the Work in a timely manner.

5.4 When any period of time is referenced to by days herein, it shall be computed to exclude the first day and include the last day of such period. If the last day of any such period falls on a Saturday or Sunday or on a day made a legal holiday by the law of the applicable jurisdiction, such day shall be omitted from the computation, and the last day shall become the next succeeding day which is not a Saturday, Sunday or legal holiday.

SECTION 6. EXHIBITS INCORPORATED.

The following documents are expressly agreed to be incorporated by reference and made a part of this Agreement.

Exhibit A:	General Terms and Conditions
Exhibit B:	Form of Performance and Payment Bonds
Exhibit C:	Insurance and Safety Requirements
Exhibit D:	Form of Release and Affidavit
Exhibit E:	Form of Contractor Application for Payment
Exhibit F:	Form of Change Order
Exhibit G:	Technical Specifications
Exhibit H:	Plans & Standard Details prepared by or for County and Identified as follows:
Exhibit I:	Federal Documents (if applicable)

Exhibit J: Solicitation Documents Index

SECTION 7. COMPENSATION AND METHOD OF PAYMENT

7.1 COMPENSATION:

Contractor shall be compensated for satisfactory completion of work performed pursuant to an assigned scope of work in accordance with this Agreement. Individual purchase orders submitted to the Contractor will be paid through a budget line item recommended by Staff and approved by the Board of County Commissioners. For each such purchase order, the Contractor will be compensated by a lump sum fee, unless otherwise mutually agreed to by the parties hereto.

7.2 ANNUAL APPROPRIATION:

Pursuant to the requirements of Florida law and Article II of Chapter 46, Escambia County Code of Ordinances, the County's performance and obligation to fund this Agreement shall be contingent upon an annual appropriation by the Escambia County Board of County Commissioners.

7.3 Payment requisitions will be sent to:

Robin Lambert
Account Manager
Enginvoices@myescambia.com
(850) 595-3412 (phone)

Notices will be sent to:

County Administrator
Escambia County Administrator
221 Palafox Place
Pensacola, Florida 32502
(850) 595-4900 (phone)
(850) 595-4908 (fax)

7.4 Payments and notices will be made to the Contractor at:

(Principle Name & Title)
(Consulting Firm's Name)
(Address)
(City, State, Zip)

(a) Any notice required hereunder or desired by the party giving such notice shall be given in writing and delivered by hand or through the instrumentality of certified mail of the United States Postal Service or other private courier service, such as Federal Express.

(b) Unless otherwise notified in writing of a new address, notices, payments, and invoices shall be made to each party at the listed addresses. Rejection, or other refusal by the addressee to accept, or the inability of the courier service, or the United States Postal Service to deliver because of a changed address of which no notice was given, shall be deemed to be receipt of the notice sent. Any party shall have the right, from time to time, to change the address to which notices shall be sent by giving the other party at least ten (10) days prior notice of the address change.

SECTION 8. MISCELLANEOUS PROVISIONS

8.1 RECORDS:

(a) The Contractor shall keep such records and accounts and shall require any subcontractors to keep records and accounts as may be necessary in order to record complete and correct entries as to personnel hours charged to this engagement and any expenses for which the Contractor expects to be reimbursed. Such books and records will be available at all reasonable times for examination and audit by the County, and shall be kept for a period of three (3) years after the completion of all work to be performed pursuant to this Agreement. Incomplete or incorrect entries in such books and records will be grounds for disallowance by the County of any fees or expenses based upon such entries.

(b) The Contractor acknowledges that this Agreement and any related financial records, audits, reports, plans, correspondence, and other documents may be subject to disclosure to members of the public pursuant to Chapter 119, Florida Statutes, as amended. In the event the Contractor fails to abide by the provisions of Chapter 119, Florida Statutes, the County may, without prejudice to any right or remedy and after giving the Contractor and its surety, if any, seven (7) days written notice, during which period the Contractor still fails to allow access to such documents, terminate the employment of the Contractor. In such case, the Contractor shall not be entitled to receive any further payment. Reasonable terminal expenses incurred by the County may be deducted from any payments left owing the Contractor (excluding monies owed the Contractor for subcontractor work).

8.2 SUBCONTRACTORS: In the event the Contractor, during the course of any work performed under this Agreement, requires the services of any subcontractors or other professional associates in connection with work performed under this Agreement, the Contractor must secure the prior written approval of the County unless such work is specifically detailed in the purchase order.

8.3 INSURANCE: The Contractor is required to carry the following insurance:

(a) Commercial General Liability with $1,000,000 minimum per occurrence, including coverage parts of bodily injury, property damage, broad form property damage, personal injury, independent contractors, blanket contractual liability, and completed operations.

(b) Automobile Liability with $1,000,000 per occurrence minimum combined single limits for all hired, owned, and non-owned vehicles.

(c) Professional Liability with $1,000,000 per occurrence minimum limit.

(d) Florida statutory workers' compensation and employers' liability with employer's liability limits of at least $100,000 each accident and $100,000 each employee/$500,000 policy limit for disease. The policy shall be endorsed to include Jones Act coverage.

(e) Watercraft Liability with $1,000,000 per occurrence minimum limit including coverage parts of bodily injury, death and property damage arising out of the ownership and maintenance or use of any watercraft, including owned, non-owned and hired watercraft. Coverage may be provided in the form of an endorsement to the general liability policy or as a separate policy.

(f) At the County's discretion, the Contractor may also be required to carry Pollution/Environmental Impairment Liability with $1,000,000 per occurrence minimum limit.

(g) It is understood and agreed by the parties that in the event that the Contractor, as defined in Section 1.2, consists of a joint venture, partnership, or other association of professional or business firms, each such firm shall be required to individually carry the above cited coverages.

(h) All liability coverage shall be through carriers admitted to do business in the State of Florida. Carriers shall be a minimum financial size of VII according to the latest edition of the A M Best Rating Guide. A n A or better Best Rating is "preferred"; however, other ratings if " Secure Best Ratings" may be considered. Liability policies shall be underwritten on the occurrence basis, except the professional and environmental impairment coverage may be provided on a claims made basis. Escambia County and the Board of County Commissioners shall be "additional insureds" on all liability policies (except professional liability). Certificates of insurance shall be provided to Joe Pillitary, Purchasing Manager, P.O. Box 1591, Pensacola, Florida 32597-1591 prior to commencement of work hereunder. Certificates shall reflect the additional insured status of Escambia County and shall provide for a minimum of thirty (30) days notice of cancellation. Escambia County and the Board of County Commissioners also shall be the certificate holders.

8.4 <u>REPRESENTATIVE OF COUNTY AND CONTRACTOR:</u>

(a) It is recognized that questions in the day-to-day conduct of the project will arise. The Contract Administrator, upon request by the Contractor, shall designate and shall advise the Contractor in writing, persons to whom all communications pertaining to the day-to-day conduct of the project shall be addressed.

(b) The Contractor shall inform the Contract Administrator in writing of the representative of the Contractor to whom matters involving the conduct of the project shall be addressed.

8.5 HEADINGS: Headings and subtitles used throughout this Agreement are for the purpose of convenience only, and no heading or subtitle shall modify or be used to interpret the text of any section.

8.6 SURVIVAL: All other provisions which, by their inherent character, sense, and context are intended to survive termination of this Agreement, shall survive the termination of this Agreement.

8.7 MODIFICATION: No modification or change to the Agreement shall be valid or binding upon the parties unless in writing and executed by the party or parties intended to be bound by it.

8.8 SUCCESSORS AND ASSIGNS: Subject to other provisions hereof, the Agreement shall be binding upon and shall inure to the benefit of the successors and assigns of the parties to the Agreement.

8.9 GOVERNING LAW: This Agreement shall be governed by and construed in accordance with the laws of the State of Florida, and the parties stipulate that venue for any matter which is a subject of this Agreement shall be in the County of Escambia.

8.10 INTERPRETATION: For the purpose of this Agreement, the singular includes the plural and the plural shall include the singular. References to statutes or regulations shall include all statutory or regulatory provisions consolidating, amending, or replacing the statute or regulation referred to. Words not otherwise defined that have well-known technical or industry meanings, are used in accordance with such recognized meanings. References to persons include their respective permitted successors and assigns and, in the case of governmental persons, persons succeeding to their respective functions and capacities.

(a) If the Consultant discovers any material discrepancy, deficiency, ambiguity, error, or omission in this Agreement, or is otherwise in doubt as to the meaning of any provision of the Agreement, the Consultant shall immediately notify the County and request clarification of the County's interpretation of this Agreement.

(b) This Agreement shall not be more strictly construed against either party hereto by reason of the fact that one party may have drafted or prepared any or all of the terms and provisions hereof.

8.11 SEVERABILITY: The invalidity or non-enforceability of any portion or provision of this Agreement shall not affect the validity or enforceability of any other portion or provision. Any invalid or unenforceable portion or provision shall be deemed severed from this Agreement and the balance hereof shall be construed and enforced as if this Agreement did not contain such invalid or unenforceable portion or provision.

8.12 FURTHER DOCUMENTS: The parties shall execute and deliver all documents and perform further actions that may be reasonably necessary to effectuate the provisions of

this Agreement.

8.13 NO WAIVER: The failure of the Contractor or the County to insist upon the strict performance of the terms and conditions hereof shall not constitute or be construed as a waiver or relinquishment of any other provision or of either party's right to thereafter enforce the same in accordance with this Agreement.

8.14 ENTIRE AGREEMENT: Each of the parties hereto agrees and represents that the Agreement comprises the full and entire agreement between the parties affecting the Work contemplated, and no other agreement or understanding of any nature concerning the same has been entered into or will be recognized, and that all negotiations, acts, work performed, or payments made prior to the execution hereof shall be deemed merged in, integrated and superseded by the Agreement.

IN WITNESS WHEREOF, the Parties hereto have made and executed this Agreement on the respective dates under each signature: Escambia County, Florida through its Board of County Commissioners, signing by its Board Chairman, duly authorized to execute this Agreement through the express delegation of authority set forth in Article II of Chapter 46, Escambia County Code of Ordinances, and (Firm's Name), signing by and through its President, duly authorized to execute same.

CONTRACTOR:
(Firm's Name), a for-profit corporation authorized to do business in the State of Florida.

By:_____
President

ATTEST: Corporate Secretary

By:_____
Secretary
[CORPORATE SEAL]

Date:_____

COUNTY:
ESCAMBIA COUNTY, FLORIDA, a political subdivision of the State of Florida acting by and through its duly authorized Board of County Commissioners.

By:_____
County Administrator

WITNESS: _____

WITNESS: _____

Date:_____

BCC Approved:_____

(Form I)

EXHIBIT A
GENERAL TERMS AND CONDITIONS

Section 1. INTENT OF CONTRACT DOCUMENTS.

1.1. It is the intent of the Contract Documents to describe a functionally complete project (or portion thereof) to be constructed in accordance with the Contract Documents. Any work, materials or equipment that may reasonably be inferred from the Contract Documents, as being required to produce the intended result shall be supplied whether or not specifically called for. When words, which have a well-known technical or trade meaning, are used to describe work, materials or equipment, such words shall be interpreted in accordance with that meaning. Reference to standard specifications, manuals or codes of any technical society, organization or association or to the laws or regulations of any governmental authority having jurisdiction over the Project, whether such reference be specific or by implication, shall mean the latest standard specification, manual, code, law or regulation in affect at the time the Work is performed, except as may be otherwise specifically stated herein.

1.2. If, during the performance of the Work, Contractor discovers a conflict, error or discrepancy in the Contract Documents, Contractor immediately shall report same to County and before proceeding with the Work affected thereby shall obtain an interpretation or clarification from the County. Contractor shall take field measurements and verify field conditions and shall carefully compare such field measurements and conditions and other information known to Contractor with the Contract Documents before commencing any portion of the Work.

1.3. Drawings are intended to show general arrangements, design and extent of Work and are not intended to serve as shop drawings. Specifications are separated into divisions for convenience of reference only and shall not be interpreted as establishing divisions for the Work, trades, subcontracts, or extent of any part of the Work. In the event of a discrepancy between or among the drawings, specifications of other Contract Document provisions, Contractor shall be required to comply with the provision which is the more restrictive or stringent requirement upon the Contractor, as determined by the County. Unless otherwise specifically mentioned, all anchors, bolts, screws, fittings, fillers, hardware, accessories, trim and other parts required in connection with any portion of the Work to make a complete, serviceable, finished and first quality installation shall be furnished and installed as part of the Work, whether or not called for by the Contract Documents.

1.4. "Engineer", where referenced on the drawings or in the specifications or in other related documents, shall mean the Escambia County Engineer or the designated representative thereof.

Section 2. INVESTIGATION AND UTILITIES.

2.1. Contractor shall have the sole responsibility of satisfying itself concerning the nature and location of the Work and the general and local conditions, and particularly, but without limitation, with respect to the following: those affecting transportation, access, disposal, handling and storage of materials; availability and quality of labor; water and electric power; availability and condition of roads; work area; living facilities; climatic conditions and seasons; physical conditions at the work-site and the Project area as a whole; topography

and ground surface conditions; nature and quality of the surface materials to be encountered; subsurface conditions; equipment and facilities needed preliminary to and during performance of the Work; and all other costs associated with such performance. The failure of Contractor to acquaint itself with any applicable conditions shall not relieve Contractor from any of its responsibilities to perform under the Contract Documents, nor shall it be considered the basis for any claim for additional time or compensation.

2.2. Contractor shall locate all existing roadways, railways, drainage facilities and utility services above, upon, or under the Project site, said roadways, railways, drainage facilities and utilities being referred to in this Section 2 as the "Utilities". Contractor shall contact the owners of all Utilities to determine the necessity for relocating or temporarily interrupting any Utilities during the construction of the Project. Contractor shall schedule and coordinate its Work around any such relocation or temporary service interruption. Where Utilities block construction, Contractor shall aggressively pursue relocation by the Utility owners. Contractor shall immediately notify the County of any delays due to Utilities blockage and document all attempts to resolve such blockage. Contractor shall be responsible for properly shoring, supporting and protecting all Utilities at all times during the course of the Work.

Section 3. <u>SCHEDULE</u>.

3.1. The Contractor, within ten (10) calendar days after receipt of the Notice of Award, shall prepare and submit to County, for review and approval, a progress schedule for the Project (herein "Progress Schedule"). The Progress Schedule shall relate to all Work required by the Contract Documents and shall provide for expeditious and practicable execution of the Work within the Contract Time. The Progress Schedule shall indicate the dates for starting and completing the various stages of the Work and shall include dates of Shop Drawing Submittals.

3.2. The Progress Schedule shall be updated monthly by the Contractor. All monthly updates to the Progress Schedule shall be subject to the County's review and approval. Contractor shall submit the updates to the Progress Schedule with its Applications for Payment noted below. The County's review and approval of the submitted Progress Schedule updates shall be a condition precedent to the County's obligation to pay Contractor.

Section 4. PROGRESS PAYMENTS.

4.1. Prior to submitting its first Application for Payment, Contractor shall submit to County, for its review and approval, a schedule of values based upon the Contract Price, listing the major elements of the Work and the dollar value for each element. After its approval by the County, this schedule of values shall be used as the basis for the Contractor's Applications for Payment. This schedule shall be updated and submitted along with a completed and notarized copy of the Application for Payment form attached to the Agreement as Exhibit E.

4.2. Prior to submitting its first Monthly Application for Payment, Contractor shall submit to County a complete list of all its proposed subcontractors and material men, showing the work and materials involved. The first Application for Payment shall be submitted no earlier than thirty (30) days after Commencement Date.

4.3. If payment is requested on the basis of materials and equipment not incorporated into the Project, but delivered and suitably stored at the site or at another location agreed to by the

County in writing, the Application for Payment will subdivide the work into component parts in sufficient detail to serve as the basis for a progress payment and shall also be accompanied by a bill of sale, invoice or other documentation warranting that upon payment by County, the County shall receive the materials and equipment free and clear of all liens, charges, security interests and encumbrances, together with evidence that the materials and equipment are covered by appropriate property insurance and other arrangements to protect County's interest therein, all of which shall be subject to the County's prior written approval.

4.4. Contractor shall submit one electronic copy of each of its Applications for Payment to the County on or about the 25th day of each month for work performed during that month. Contractor shall submit no more than one application for payment each month. Within ten (10) calendar days after receipt of each Application for Payment, the County shall either: (1) indicate approval of the requested payment; (2) indicate approval of only a portion of the requested payment, stating in writing the reasons therefore; or (3) return the Application for Payment to the Contractor indicating, in writing, the reason for refusing to approve payment. In the event of a total denial and return of the Application for Payment by the County, the Contractor may make the necessary corrections and resubmit the Application for Payment. The County shall, within thirty (30) calendar days after County approval of an Application for Payment, pay the Contractor the amounts so approved. Provided, however, in no event shall the County be obligated to pay an amount greater than that portion of the Application for Payment approved by the County.

4.5. County shall retain ten percent (10%) of the gross amount of each monthly payment request or ten percent (10%) of the portion thereof approved by the County for payment whichever is less. The retained sum shall be accumulated and not released to Contractor until final payment is due. Any interim interest on such sums shall accrue to County.

4.6. Monthly payments to Contractor shall in no way imply approval or acceptance of Contractor's work.

4.7. Each Application for Payment shall be accompanied by Release and Affidavit, in the form attached as Exhibit D, showing that all materials, labor, equipment and other bills associated with that portion of the Work payment is being requested or have been paid in full. The County shall not be required to make payment until and unless these affidavits are furnished by Contractor.

4.8. Applications for Payment will not be approved unless all submittals required by the Contract documents, up to that point, are provided and "As-Built" record documents are maintained as required by Section 8.2.

Section 5. PAYMENTS WITHHELD.

5.1. The County may decline to approve any Application for Payment, or portions thereof, because of subsequently discovered evidence or subsequent inspections. The County may nullify the whole or any part of any approval for payment previously issued and County may withhold any payments otherwise due Contractor under this Agreement or any other agreement between County and Contractor, to such extent as may be necessary in the County's opinion to protect it from loss because of: (a) defective Work not remedied; (b) third party claims filed or reasonable evidence indicating probable filing of such claims; (c) failure of Contractor to make payment properly to subcontractors or for labor, materials or

equipment; (d) reasonable doubt that the Work can be completed for the unpaid balance of the Contract Amount; (e) reasonable indication that the Work will not be completed within the Contract Time; (f) unsatisfactory prosecution of the Work by the Contractor; or (g) any other material breach of the Contract Documents. If these conditions are not remedied or removed, County may, after three (3) days written notice, rectify the same at Contractor's expense. County also may offset against any sums due Contractor the amount of any liquidated or unliquidated obligations of Contractor to County, whether relating to or arising out of this Agreement or any other agreement between Contractor and County.

Section 6. <u>FINAL PAYMENT.</u>

6.1. County shall make final payment to Contractor within forty- five (45) calendar days after the Work is finally inspected and accepted by County in accordance with Section 20.1 herein, provided that Contractor first, and as an explicit condition precedent to the accrual of Contractor's right to final payment, shall have furnished County with a properly executed and notarized copy of the Release and Affidavit attached as Exhibit D, as well as, a duly executed copy of the Surety's consent to final payment and such other documentation that may be required by the Contract Documents or the County.

6.2. Contractor's acceptance of final payment shall constitute a full waiver of any and all claims by Contractor against County arising out of this Agreement or otherwise relating to the Project, except those previously made in writing and identified by Contractor as unsettled at the time of the final Application for Payment. Neither the acceptance of the Work nor payment by County shall be deemed to be a waiver of County's right to enforce any obligations of Contractor hereunder or to the recovery of damages for defective Work not discovered by the County at the time of final inspection.

Section 7. <u>SUBMITTALS AND SUBSTITUTIONS.</u>

7.1. Contractor shall carefully examine the Contract Documents for all requirements for approval of materials to be submitted such as shop drawings, data, test results, schedules and samples. When submitted for the Engineer's review, Shop Drawings shall bear the Contractor's certification that the Contractor has reviewed, checked, and approved the Shop Drawings and that they are in conformance with the requirements of the Contract Documents. Contractor shall submit all such materials at its own expense and in such form as required by the Contract Documents in sufficient time to prevent any delay in the delivery of such materials and the installation thereof.

7.2. Prior to submitting its first Application for Payment, Contractor shall provide to County a CD/DVD in digital format and/or photographs (as determined by the County Project Manager) showing the pre-existing conditions located within the limits of construction.

7.3. Whenever materials or equipment are specified or described in the Contract Documents by using the name of a proprietary item or the name of a particular supplier, the naming of the item is intended to establish the type, function and quality required. Unless the name is followed by words indicating that no substitution is permitted, materials or equipment of other suppliers may be accepted by County if sufficient information is submitted by Contractor to allow the County to determine that the material or equipment proposed is equivalent or equal to that named. Requests for review of substitute items of material and equipment will not be accepted by County from anyone other than Contractor and all such requests must be submitted by Contractor to County within thirty (30) calendar days after

Notice to Proceed is received by Contractor.

7.4. If Contractor wishes to furnish or use a substitute item of material or equipment, Contractor shall make application to the County for acceptance thereof, certifying that the proposed substitute shall perform adequately the functions and achieve the results called for by the general design, be similar and of equal substance to that specified and be suited to the same use as that specified. The application shall state that the evaluation and acceptance of the proposed substitute will not prejudice Contractor's achievement of substantial completion on time, whether or not acceptance of the substitute for use in the Work will require a change in any of the Contract Documents (or in the provisions of any other direct contract with County for the Project) to adapt the design to the proposed substitute and whether or not incorporation or use by the substitute in connection with the Work is subject to payment of any license fee or royalty. All variations of the proposed substitute from that specified will be identified in the application and available maintenance, repair and replacement service shall be indicated. The application also shall contain an itemized estimate of all costs that will result directly or indirectly from acceptance of such substitute, including costs for redesign and claims of other contractors affected by the resulting change, all of which shall be considered by the County in evaluating the proposed substitute. The County may require Contractor to furnish at Contractor's expense additional data about the proposed substitute.

7.5. If a specific means, method, technique, sequence or procedure of construction is indicated in or required by the Contract Documents, Contractor may furnish or utilize a substitute means, method, sequence, technique or procedure of construction acceptable to the County, if Contractor submits sufficient information to allow the County to determine that the substitute proposed is equivalent to that indicated or required by the Contract Documents. The procedures for submission to and review by the County shall be the same as those provided herein for substitute materials and equipment.

7.6. The County shall be allowed a reasonable time within which to evaluate each proposed substitute. The County shall be the sole judge of acceptability, and no substitute will be ordered, installed or utilized without the County's prior written acceptance, which shall be evidenced by either a Change Order or an approved Shop Drawing. The County may require Contractor to furnish at Contractor's expense a special performance guarantee or other surety with respect to any substitute.

Section 8. <u>DAILY REPORTS, AS-BUILTS, AND MEETINGS.</u>

8.1. Unless waived in writing by County, Contractor shall complete and submit, along with its Application for Payment, to the County on a monthly basis a daily log of the Contractor's work for the preceding month in a format approved by the County. The daily log shall document all activities of Contractor at the Project site including, but not limited to, the following:

8.1.1. Weather conditions showing the high and low temperatures during work hours, the amount of precipitation received on the Project site, and any other weather conditions which adversely affect the Work;

8.1.2. Soil conditions which adversely affect the Work;

8.1.3. The hours of operation by Contractor's personnel and subcontractor's personnel;

8.1.4. The number of Contractor's and subcontractor's personnel present and working at the Project site, by subcontract and trade;

8.1.5. All equipment present at the Project site, description of equipment use and designation of time equipment was used (specifically indicating any down time);

8.1.6. Description of Work being performed at the Project site;

8.1.7. Any unusual or special occurrences at the Project site;

8.1.8. Materials received at the Project site

The daily log shall not constitute nor take the place of any notice required to be given by Contractor to County pursuant to the Contract Documents.

8.2. Contractor shall maintain in a safe place at the Project site one record copy of the Contract Documents, as well as all shop drawings and other Contractor submittals and all written interpretations and clarifications issued by the County, in good order and annotated to show all changes made during construction. The annotated drawings shall be continuously updated by the Contractor throughout the prosecution of the Work to accurately reflect all field changes that are made to adapt the Work to field conditions, changes resulting from Change Orders, Work Directive Changes and Field Orders, and all concealed and buried installations of piping, conduit and utility services. All buried and concealed items, both inside and outside the Project site, shall be accurately located on the annotated drawings as to depth and in relationship to not less than two (2) permanent features (e.g. interior or exterior wall faces). The annotated drawings shall be clean and all changes, corrections and dimensions shall be given in a neat and legible manner in a contrasting color. The "As-Built" record documents, together with all approved samples and a counterpart of all approved shop drawings shall be available to County for reference. Upon completion of the Work, and as a condition precedent to Contractor's entitlement to final payment, these "As-Built" record documents, samples and shop drawings shall be delivered to County by Contractor.

8.3. Contractor shall keep all records and supporting documentation which concern or relate to the Work hereunder for a minimum of five (5) years from the date of termination of this Agreement or the date the Project is completed, whichever is later. County, or any duly authorized agents or representatives of County, shall have the right to audit, inspect and copy all such records and documentation as often as they deem necessary during the period of this Agreement and during the five (5) year period noted above; provided, however, such activity shall be conducted only during normal business hours.

Section 9. <u>CONTRACT TIME AND TIME EXTENSIONS.</u>

9.1. Contractor shall diligently pursue the completion of the Work and coordinate the Work being done on the Project by its subcontractors and material men, as well as coordinating its Work with all work of others at the Project Site, so that its Work or the work of others shall not be delayed or impaired by any act or omission of Contractor. Contractor shall be solely responsible for all construction means, methods, techniques, sequences, and procedures, as well as coordination of all portions of the Work under the Contract Documents.

9.2. Should Contractor be obstructed or delayed in the prosecution of or completion of the Work as a result of unforeseeable causes beyond the control of Contractor, and not due to its fault or neglect, including but not restricted to acts of God or of the public enemy, acts of government, fires, floods, epidemics, quarantine regulations, strikes or lockouts, Contractor shall notify the County in writing within forty-eight (48) hours after the commencement of such delay. Written supporting data with specific details of Contractor operations, which were delayed, shall be submitted to the County within fifteen (15) calendar days after the occurrence of the delay, unless the County grants additional time in writing for such submittals, or else the Contractor shall be deemed to have waived any right which Contractor may have had to request a time extension.

9.3. No interruption, interference, inefficiency, suspension or delay in the commencement or progress of the Work from any cause whatever, including those for which County may be responsible, in whole or in part, shall relieve Contractor of his duty to perform or give rise to any right to damages or additional compensation from County. Contractor expressly acknowledges and agrees that it shall receive no damages for delay. Contractor's sole remedy, if any, against County will be the right to seek an extension to the Contract Time; provided, however, the granting of any such time extension shall not be a condition precedent to the aforementioned "No Damages For Delay" provision. This paragraph shall expressly apply to claims for early completion, as well as to claims based on late completion.

9.4. Requests for delays due to adverse weather conditions shall meet all of the following conditions:

9.4.1. Contractor notified the County in writing within forty-eight (48) hours of the delay.

9.4.2. The weather was unusual as documented by supporting data.

9.4.3. The weather did have an adverse impact on the contractor's schedule (critical path only).

9.4.4. The Contractor and inspector's daily logs corroborate the adverse impact. Where a conflict exists between the weather data and the daily reports, the daily reports will take precedence.

Section 10. <u>CHANGES IN THE WORK.</u>

10.1. County shall have the right at any time during the progress of the Work to increase or decrease the Work. Promptly after being notified of a change, Contractor shall submit an itemized estimate of any cost and/or time increases or savings it foresees as a result of the change. Except in an emergency endangering life or property, or as expressly set forth herein, no addition or changes to the Work shall be made except upon written order of County, and County shall not be liable to the Contractor for any increased compensation without such written order. No officer, employee or agent of County is authorized to direct any extra or changed work orally.

10.2. A Construction Change Order, in the form attached as Exhibit F to this Agreement, shall be issued and executed promptly after an agreement is reached between Contractor and County concerning the requested changes. Contractor shall promptly perform changes authorized by duly executed Change Orders. The Contract Amount and Contract Time shall be adjusted in the Change Order in the manner as County and Contractor shall mutually agree.

10.3. If County and Contractor are unable to agree on a Change Order for the requested change, Contractor shall, nevertheless, promptly perform the change as directed by County in a written Work Directive Change. In that event, the Contract Amount and Contract Time shall be adjusted as directed by County. If Contractor disagrees with the County's adjustment determination, Contractor must make a claim pursuant to Section 11 of these General Conditions or else be deemed to have waived any claim on this matter it might otherwise have had.

10.4. In the event a requested change results in an increase to the Contract Amount, the amount of the increase shall be limited to the Contractor's reasonable direct labor and material costs and reasonable actual equipment costs as a result of the change (including allowance for labor burden costs) plus a maximum ten percent (10%) markup for all overhead and profit. In the event such change Work is performed by a Subcontractor, a maximum ten percent (10%) markup for all overhead and profit for all Subcontractors' and sub-subcontractors' direct labor and material costs and actual equipment costs shall be permitted, with a maximum five percent (5%) markup thereon by the Contractor for all of its overhead and profit, for a total maximum markup of fifteen percent (15%). All compensation due Contractor and any Subcontractor or sub-subcontractor for field and home office overhead is included in the markups noted above.

10.5. County shall have the right to conduct an audit of Contractor's books and records to verify the accuracy of the Contractor's claim with respect to Contractor's costs associated with any Change Order.

10.6. The County shall have authority to order minor changes in the Work not involving an adjustment to the Contract Amount or an extension to the Contract Time and not inconsistent with the intent of the Contract Documents. Such changes may be affected by Field Order or by other written order. Such changes shall be binding on the Contractor.

Section 11. <u>CLAIMS AND DISPUTES.</u>

11.1. A Claim is a demand or assertion by one of the parties seeking an adjustment or interpretation of the terms of the Contract Documents, payment of money, extension of time or other relief with respect to the terms of the Contract Documents. The term "Claim" also includes other disputes and matters in question between County and Contractor arising out of or relating to the Contract Documents. The responsibility to substantiate a Claim shall rest with the party making the Claim.

11.2. Claims by the Contractor shall be made in writing to the County within forty-eight (48) hours after the first day of the event giving rise to such Claim or else the Contractor shall be deemed to have waived the Claim. Written supporting data shall be submitted to the County within fifteen (15) calendar days after the occurrence of the event, unless the County grants additional time in writing, or else the Contractor shall be deemed to have waived the Claim. All claims shall be priced in accordance with the provisions of

Subsection 10.4.

11.3. The Contractor shall proceed diligently with its performance as directed by the County, regardless of any pending Claim, action, suit or administrative proceeding, unless otherwise agreed to by the County in writing. County shall continue to make payments in accordance with the Contract Documents pending Claim.

Section 12. <u>OTHER WORK</u>.

12.1. County may perform other work related to the Project at the site by County's own forces, have other work performed by utility owners or let other direct contracts. If the fact that such other work is to be performed is not noted in the Contract Documents, notice thereof will be given to Contractor. If Contractor believes that such performance will involve additional expense to Contractor or require additional time, Contractor shall send written notice of that fact with specific details of anticipated costs and delays to County within forty-eight (48) hours of being notified of the other work. Written supporting data of actual need for additional time or additional expense, shall be submitted to the County within fifteen (15) calendar days after completion of other work, unless the County grants additional time in writing, or else the Contractor shall be deemed to have waived any right which Contractor may have had to request a time extension or adjustment to the Contract Amount.

12.2. Contractor shall afford each utility owner and other contractor (or County, if County is performing the additional work with County's employees) proper and safe access to the site and a reasonable opportunity for the introduction and storage of materials and equipment and the execution of such work and shall properly connect and coordinate its Work with theirs. Contractor shall do all cutting, fitting and patching of the Work that may be required to make its several parts come together properly and integrate with such other work. Contractor shall not endanger any work of others by cutting, excavating or otherwise altering their work and will only cut or alter their work with the written consent of the County and the others whose work will be affected.

12.3. If any part of Contractor's Work depends for proper execution or results upon the work of any other contractor or utility owner (or County), Contractor shall inspect and promptly report to County in writing any delays, defects or deficiencies in such work that render it unavailable or unsuitable for such proper execution and results. Contractor's failure to report will constitute an acceptance of the other work as fit and proper for integration with Contractor's Work.

Section 13. <u>INDEMNIFICATION AND INSURANCE.</u>

13.1. Contractor agrees to save harmless, indemnify, and defend County and its consultants, agents, officers and employees from any and all claims, losses, penalties, interest, demands, judgments, and costs of suit, including attorneys' fees and paralegals' fees, for any expense, damage or liability incurred by any of them, whether for personal injury, death, property damage, direct or consequential damages, or economic loss, including environmental impairment, arising directly or indirectly on account of or in connection with the Work done by Contractor under this Agreement or by any person, firm or corporation to whom any portion of the Work is subcontracted by Contractor or resulting from the use by Contractor, or by any one for whom Contractor is legally liable, of any materials, tools, machinery or other property of County. County and Contractor agree the first $100.00 of the Contract Amount paid by County to Contractor shall be given as separate consideration

for this indemnification, and any other indemnification of County by Contractor provided for within the Contract Documents, the sufficiency of such separate consideration being acknowledged by Contractor by Contractor's acceptance and execution of the Agreement.

The Contractor's obligation shall not be limited by, or in any way to, any insurance coverage or by any provision in or exclusion or omission from any policy of insurance. The Contractor agrees to pay on behalf of Escambia County, as well as provide a legal defense for the County, both of which will be done only if and when requested by the County, for all claims made. Such payment on the behalf of the County shall be in addition to any and all other legal remedies available to the County and shall not be considered to be the County's exclusive remedy.

13.2. Contractor shall obtain and carry, at all times during its performance under the Contract Documents, insurance of the types and in the amounts set forth in Exhibit C to the Agreement. All insurance policies shall be from responsible companies duly authorized to do business in the State of Florida and/or responsible risk retention group insurance companies, which are registered with the State of Florida. All commercial insurance carriers providing the Contractor with required insurance shall be a minimum financial size category of VII according to the AM Best Rating Guide, latest edition. An A or better Best Rating is "preferred"; however, other ratings if "Secure Best Ratings" may be considered. Within ten (10) calendar days after Notice of Award is received by Contractor and prior to the commencement of work, Contractor shall provide County with properly executed Certificates of Insurance to evidence Contractor's compliance with the insurance requirements of the Contract Documents. Said Certificates of Insurance shall be on forms approved by County, such as "Acord Form 25". The Certificates of Insurance shall be personally, manually signed by the authorized representatives of the insurance company/companies shown on the Certificates of Insurance, with proof that they are authorized representatives thereof. Certificates of Insurance shall be mailed to Escambia County in care of: Purchasing Manager, Purchasing Division, P.O. Box 1591, Pensacola, Florida 32597-1591. In addition, certified, true and exact copies of all insurance policies required hereunder shall be provided to County, on a timely basis, when requested by County.

13.3. The Certificates of Insurance and required insurance policies shall contain provisions that thirty (30) days prior written notice by registered or certified mail shall be given County of any cancellation, intent not to renew, or reduction in the policies or coverages, except in the application of the aggregate limits provisions. In the event of a reduction in the aggregate limit of any policy, Contractor shall immediately take steps to have the aggregate limit reinstated to the full extent permitted under such policy.

13.4. All insurance coverages of the Contractor shall be primary to any insurance or self-insurance program carried by the County applicable to this Project. The acceptance by County of any Certificate of Insurance does not constitute approval or agreement by the County that the insurance requirements have been satisfied or that the insurance policy shown on the Certificate of Insurance is in compliance with the requirements of the Contract Documents. No work shall commence at the Project site unless and until the required Certificates of Insurance are received by the County.

13.5. Contractor shall require each of its subcontractors to procure and maintain, until the completion of the subcontractor's work, insurance of the types and to the limits specified in Exhibit C, unless such insurance requirements for the subcontractor is expressly waived in

writing by the County. All liability insurance policies, other than professional liability, worker's compensation and employer's liability policies, obtained by Contractor to meet the requirements of the Contract Documents shall name Escambia County as an additional insured and shall contain Severability of Interest provisions. Escambia County shall also be designated as certificate holder with the address of P. O. Box 1591, Pensacola, Florida 32597-1591. If any insurance provided pursuant to the Contract Documents expires prior to the completion of the Work, renewal Certificates of Insurance and, if requested by County, certified, true copies of the renewal policies shall be furnished by Contractor within thirty (30) days prior to the date of expiration.

13.6. All liability policies shall be underwritten on the "occurrence" basis, unless otherwise approved in writing by the County Division of Risk Management. "Claims made" policies, if approved by the Risk Manager, and subsequent insurance certificates shall provide a "retro-date" which shall include the effective date of the contract. "Claims-made" renewals or carrier and policy replacements shall reflect the original "retro-date."

13.7. Should at any time the Contractor not maintain the insurance coverages required herein, the County may terminate the Agreement or at its sole discretion shall be authorized to purchase such coverages and charge the Contractor for such coverages purchased. The County shall be under no obligation to purchase such insurance, nor shall it be responsible for the coverages purchased or the insurance company or companies used. The decision of the County to purchase such insurance coverages shall in no way be construed to be a waiver of any of its rights under the Contract Documents.

13.8. Contractor shall submit to County a copy of all accident reports arising out of any injuries to its employees or those of any firm or individual to whom it may have subcontracted a portion of the Work, or any personal injuries or property damages arising or alleged to have arisen on account of any work by Contractor under the Contract Documents.

13.9. Duty to Provide Legal Defense. The Contractor agrees to pay, to Escambia County, as well as provide a legal defense for the County, which shall include attorney's fees and costs, both of which will be done only if and when requested by the County, for all claims as described in paragraph 13.1. Such payment on behalf of the County shall be in addition to any and all other legal remedies available to the County and shall not be considered to be the County's exclusive remedy.

Section 14. <u>COMPLIANCE WITH LAWS.</u>

14.1. Contractor agrees to comply, at its own expense, with all federal, state and local laws, codes, statutes, ordinances, rules, regulations and requirements applicable to the Project, including but not limited to those dealing with taxation, worker's compensation, equal employment and safety. If Contractor observes that the Contract Documents are at variance therewith, it shall promptly notify County in writing. Compliance with the above laws shall include but is not limited to: (1) the Occupational Safety and Health Act, 29 CFR 1910 and 1926, respectively, General Industry Standards and Construction Industry Standards, including regulations regarding Trenching and Shoring; (2) the Florida Workers' Compensation Law, Chapter 440, Florida Statutes; (3) Rules 38F and 38I, Florida Administrative Code; and (4) Section 102, Standard Specifications for Road and Bridge Construction, Florida Department of Transportation.

Section 15. CLEANUP AND PROTECTIONS.

15.1. Contractor agrees to keep the Project site clean at all times of debris, rubbish and waste materials arising out of the Work. At the completion of the Work, Contractor shall remove all debris, rubbish and waste materials from and about the Project site, as well as all tools, appliances, construction equipment and machinery and surface materials, and shall leave the Project site clean and ready for occupancy by County. Non-compliance with directives of this section may serve as a basis of rejection of Application for Payment.

15.2. Any existing surface or subsurface improvements, including, but not limited to, pavements, curbs, sidewalks, pipes, utilities, footings, structures, trees and shrubbery, not indicated in the Contract Documents to be removed or altered, shall be protected by Contractor from damage during the prosecution of the Work. Any such improvements so damaged shall be restored by Contractor to the condition equal to that existing at the time of Contractor's commencement of the Work.

Section 16. ASSIGNMENT.

16.1. Contractor shall not assign this Agreement or any part thereof, without the prior consent in writing of County. If Contractor does, with approval, assign this Agreement or any part thereof, it shall require that its assignee be bound to it and to assume toward Contractor all of the obligations and responsibilities that Contractor has assumed toward County.

Section 17. PERMITS, LICENSES AND TAXES.

17.1. Except as noted in paragraph 17.2 all permits and licenses necessary for the prosecution of the Work shall be procured and paid for by Contractor. All permits or fees, including but not limited to, all license fees, permit fees, impact fees or inspection fees payable by Contractor to County have been disclosed to Contractor in the bidding documents or other request for proposal at the time the Project was let for bid. If Contractor performs any Work without obtaining, or contrary to, such permits or licenses, Contractor shall bear all costs arising there from. Contractor shall pay all governmental charges and inspection fees necessary for the prosecution of the Work.

17.2. Permits required for the Work from FDOT, FDEP, the Army Corps of Engineers, Northwest Florida Water Management District and any archeological permitting agency will be paid for and obtained by the County.

17.3. Contractor shall pay all sales, consumer, use and other similar taxes associated with the Work or portions thereof, which are applicable during the performance of the Work.

Section 18. TERMINATION FOR DEFAULT.

18.1. Contractor shall be considered in material default of the Agreement and such default shall be considered cause for County to terminate the Agreement, in whole or in part, as further set forth in this Section, if Contractor: (1) fails to begin the Work under the Contract Documents within the time specified herein; or (2) fails to properly and timely perform the Work as directed by the County or as provided for in the approved Progress Schedule; or (3) performs the Work unsuitably or neglects or refuses to remove materials or to correct or replace such Work as may be rejected as unacceptable or unsuitable; or (4) discontinues the prosecution of the Work; or (5) fails to resume Work which has been suspended within

a reasonable time after being notified to do so; or (6) becomes insolvent or is declared bankrupt, or commits any act of bankruptcy; or (7) allows any final judgment to stand against it unsatisfied for more than ten (10) days; or (8) makes an assignment for the benefit of creditors; or (9) fails to obey any applicable codes, laws, ordinances, rules or regulations with respect to the Work; or (10) materially breaches any other provision of the Contract Documents.

18.2. County shall notify Contractor in writing of Contractor's default(s). If County determines that Contractor has not remedied and cured the default(s) within seven (7) calendar days following receipt by Contractor of said written notice, then County, at its option, without releasing or waiving its rights and remedies against the Contractor's sureties and without prejudice to any other right or remedy it may be entitled to hereunder or by law, may terminate Contractor's right to proceed under the Agreement, in whole or in part, and take possession of all or any portion of the Work and any materials, tools, equipment, and appliances of Contractor, take assignments of any of Contractor's subcontracts and purchase orders, and complete all or any portion of Contractor's Work by whatever means, method or agency which County, in its sole discretion, may choose.

18.3. If County deems any of the foregoing remedies necessary, Contractor agrees that is shall not be entitled to receive any further payments hereunder until after the Project is completed. All monies expended and all of the costs, losses, damages and extra expenses, including all management, administrative and other overhead and other direct and indirect expenses (including attorneys' fees) or damages incurred by County incident to such completion, shall be deducted from the Contract Amount, and if such expenditures exceed the unpaid balance of the Contract Amount, Contractor agrees to pay promptly to County on demand the full amount of such excess, including costs of collection, attorney's fees (including appeals) and interest thereon at the maximum legal rate of interest until paid. If the unpaid balance of the Contract Amount exceeds all such costs, expenditures and damages incurred by the County to complete the Work, such excess shall be paid to the Contractor. The amount to be paid to the Contractor or County, as the case may be, and this obligation for payment shall survive termination of the Agreement.

18.4. The liability of Contractor hereunder shall extend to and include the full amount of any and all sums paid, expenses and losses incurred, damages sustained, and obligations assumed by County in good faith under the belief that such payments or assumptions were necessary or required, in completing the Work and providing labor, materials, equipment, supplies, and other items therefore or re-letting the Work, in settlement, discharge or compromise of any claims, demands, suits, and judgments pertaining to or arising out of the Work hereunder.

18.5. If, after notice of termination of Contractor's right to proceed pursuant to this Section, it is determined for any reason that Contractor was not in default, or that its default was excusable, or that County is not entitled to the remedies against Contractor provided herein, then Contractor's remedies against County shall be the same as and limited to those afforded Contractor below under Subsection 19.1, Termination for Convenience.

18.6. If the Contractor refuses to allow public access to all documents, papers, letters, or other material subject to the provisions of Chapter 119, Florida Statutes, and made or received by the Contractor in conjunction with this Agreement then the County may, without prejudice to any right or remedy and after giving the Contractor and his surety, if any, seven (7) days written notice, during which period Contractor still fails to allow access, terminate the

employment of the Contractor and take possession of the site and of all materials, equipment, tools, construction equipment and machinery thereon, owned by the Contractor, and may finish the project by whatever method it may deem expedient. In such case, the Contractor shall not be entitled to receive any further payment until the Project is finished. Reasonable terminal expenses incurred by the County may be deducted from any payments left owing the Contractor (excluding monies owed the Contractor for subcontract work).

Section 19. <u>TERMINATION FOR CONVENIENCE AND RIGHT OF SUSPENSION.</u>

19.1. County shall have the right to terminate this Agreement without cause upon seven (7) calendar days written notice to Contractor. In the event of such termination for convenience, Contractor's recovery against County shall be limited to that portion of the Contract Amount earned through the date of termination, together with any retainage withheld and reasonable termination expenses incurred, but Contractor shall not be entitled to any other or further recovery against County, including, but not limited to, damages or any anticipated profit on portions of the Work not performed.

19.2. County shall have the right to suspend all or any portions of the Work upon giving Contractor two (2) calendar days' prior written notice of such suspension. If all or any portion of the Work is so suspended, Contractor's sole and exclusive remedy shall be to seek an extension of time to its schedule in accordance with the procedures set forth in the Contract Documents. In no event shall the Contractor be entitled to any additional compensation or damages. Provided, however, if the ordered suspension exceeds three (3) months, the Contractor shall have the right to terminate the Agreement with respect to that portion of the Work which is subject to the ordered suspension.

Section 20. <u>COMPLETION.</u>

20.1. Upon receipt of written notice, the County will ascertain whether the work or designated portions thereof are ready for the Engineer's substantial completion inspection. From the Engineer's list of incomplete or unsatisfactory items, a schedule for the County's review will be prepared for their completion indicating such completion dates. The County will issue a Certificate of Substantial Completion when the work on the punch list has been accomplished.

20.2. Upon receipt of written notice that the Work is ready for final inspection and acceptance and upon receipt of a final Application for Payment, the County shall promptly make such inspection and, if it finds the work acceptable and fully performed under the Contract Documents, shall promptly issue a Certificate of Final Completion and Recommendation for Payment, stating that, on the basis of observations and inspections, the Work has been completed in accordance with the terms and conditions of the Contract Documents and that the entire balance found to be due the Contractor is due and payable. The final payment shall not become due and payable until Contractor submits: (1) the Release and Affidavit in the form attached as Exhibit D, (2) consent of surety to final payment, (3) if required by County, other data establishing payment or satisfaction of all obligations, such as receipts, releases and waivers of liens, arising out of the Contract Documents, to the extent and in such form as may be designated by County, and (4) a published copy of the Notice of Completion as provided for in this section. County reserves the right to inspect the Work and make an independent determination as to the Work's acceptability. Unless and until the County is completely satisfied, the final payment shall not become due and payable.

20.3. After the Work is ready for final inspection and acceptance by the County, a legal advertisement must be published by the Contractor in a local newspaper of a general countywide circulation at least thirty (30) days before final payment shall be made. Example of such publication is as follows:

Legal Notice of Completion

Notice is hereby given that the undersigned Contractor has completed and has ready for acceptance by the Board of County Commissioners of Escambia County, Florida, the following construction project:

_____
(Project Name and Address)

_____
(Legal Name and Address - entity of the Contractor)

Subcontractors, material men, and other persons having payment claims against the Contractor relating to this project should govern themselves accordingly.

Section 21. WARRANTY.

21.1. Contractor shall obtain and assign to County all express warranties given to Contractor or any subcontractors by any material men supplying materials, equipment or fixtures to be incorporated into the Project. Contractor warrants to County that any materials and equipment furnished under the Contract Documents shall be new unless otherwise specified, and that all Work shall be of good quality, free from all defects and in conformance with the Contract Documents. Contractor further warrants to County that all materials and equipment furnished under the Contract Documents shall be applied, installed, connected, erected, used, cleaned and conditioned in accordance with the instructions of the applicable manufacturers, fabricators, suppliers or processors except as otherwise provided for in the Contract Documents. If, within two (2) years after substantial completion and acceptance, any Work is found to be defective or not in conformance with the Contract Documents, Contractor shall correct it promptly after receipt of written notice from County. Contractor shall also be responsible for and pay for replacement or repair of adjacent materials or Work, which may be damaged as a result of such replacement or repair. These warranties are in addition to those implied warranties to which County is entitled as a matter of law. The Performance Bond, if required, shall remain in full force and effect throughout the two (2) year Warranty Period.

Section 22. PROJECT LAYOUT AND CONTROL.

22.1. Engineer will provide survey control, referencing beginning and ending stations, P.C.'s, P.T.'s and intermediate stations at 500 foot intervals. Staking is to be set along control line (base line or centerline of right-of-way, as indicated on plans) or at an offset determined by the Engineer. Bench Marks will be provided at intervals no greater than 1000 feet. The Engineer at the Contractor's expense shall replace any of these points, which are disturbed or destroyed by the Contractor.

22.2. Contractor shall employ a competent Engineer or Land Surveyor licensed in the State of Florida familiar with construction control procedures to lay out all other parts of the work, and to establish all points, grades and levels necessary to locate the work. The Contractor shall be held responsible for all mistakes that may be caused by his incorrect layout and grade spotting work, or caused by the loss or disturbance of the Engineer's layout work.

22.3. Should the Contractor in the course of the work find that the points, grades, and levels which are shown upon the Drawings are not conformable to the physical conditions of the locality at the proposed work or structure, he shall immediately inform the Engineer of the discrepancy between the actual physical conditions of the locality of the proposed work, and the points, grades and levels which are shown on the Drawings. No claim shall be made by the Contractor against the Owner for compensation or damage by reasons for failure of the Engineer to represent upon said Drawings, points, grades and levels conformable to the actual physical conditions of the locality of the proposed work.

Section 23. <u>TESTS AND INSPECTIONS.</u>

23.1. County, its respective representatives, agents and employees, and any governmental agencies with jurisdiction over the Project shall have access at all times to the Work, whether the Work is being performed on or off of the Project site, for their observation, inspection and testing. Contractor shall provide proper, safe conditions for such access. Contractor shall provide County with timely notice of readiness of the Work for all required inspections, tests or approvals.

23.2. If the Contract Documents or any codes, laws, ordinances, rules or regulations of any public authority having jurisdiction over the Project requires any portion of the Work to be specifically inspected, tested or approved, Contractor shall assume full responsibility therefore, pay all costs in connection therewith and furnish County the required certificates of inspection, testing or approval. All inspections, tests or approvals shall be performed in a manner and by organizations acceptable to the County.

23.3. If any Work that is to be inspected, tested or approved is covered without written concurrence from the County, such work must, if requested by County, be uncovered for observation. Such uncovering shall be at Contractor's expense unless Contractor has given County timely notice of Contractor's intention to cover the same and County has not acted with reasonable promptness to respond to such notice. If any Work is covered contrary to written directions from County, such Work must, if requested by County, be uncovered for County's observation and be replaced at Contractor's sole expense.

23.4. Neither observations by the County nor inspections, tests or approvals by others shall relieve Contractor from Contractor's obligations to perform the Work in accordance with the Contract Documents.

23.5. Prior to payment for any Work for which testing is specified, Contractor shall provide the County a copy of reasonably acceptable test results relating to such work as required by the technical specifications of the solicitation.

Section 24. DEFECTIVE WORK.

24.1. Work not conforming to the requirements of the Contract Documents shall be deemed defective Work. If required by County, Contractor shall as directed, either correct all defective Work, whether or not fabricated, installed or completed, or, if the defective Work has been rejected by County, remove it from the site and replace it with acceptable Work. Contractor shall bear all direct, indirect and consequential costs of such correction or removal (including, but not limited to fees and charges of engineers, architects, attorneys and other professionals) made necessary thereby, and shall hold County harmless for same.

24.2. If the County considers it necessary or advisable that covered Work be observed by County or inspected or tested by others, Contractor, at County's request, shall uncover, expose or otherwise make available for observation, inspection or tests as County may require, that portion of the Work in question, furnishing all necessary labor, material and equipment. If it is found that such Work is defective, Contractor shall bear all direct, indirect and consequential costs of such uncovering, exposure, observation, inspection and testing and of satisfactory reconstruction (including, but not limited to, fees and charges of engineers, architects, attorneys and other professionals), and County shall be entitled to an appropriate decrease in the Contract Amount. If, however, such Work is not found to be defective, Contractor shall be allowed an increase in the Contract Amount and /or an extension of the Contract Time, directly attributable to such uncovering, exposure, observation, inspection, testing and reconstruction.

24.3. If any portion of the Work is defective, or Contractor fails to supply sufficient skilled workers with suitable materials or equipment, or fails to finish or perform the Work in such a way that the completed Work will conform to the Contract Documents, County may order Contractor to stop the Work, or any portion thereof, until the cause for such order has been eliminated; however, this right of County to stop the Work shall not give rise to any duty on the part of County to exercise this right for the benefit of Contractor or any other party.

24.4. Should the County determine, at its sole opinion, it is in the County's best interest to accept defective Work, the County may do so. Contractor shall bear all direct, indirect and consequential costs attributable to the County's evaluation of and determination to accept defective Work. If such determination is rendered prior to final payment, a Change Order shall be executed evidencing such acceptance of such defective Work, incorporating the necessary revisions in the Contract Documents and reflecting an appropriate decrease in the Contract Amount. If the County accepts such defective Work after final payment, Contractor at the discretion of the County shall promptly pay County an appropriate amount to adequately compensate County for its acceptance of the defective Work or shall increase in the Work's warranty period beyond two (2) years.

24.5. If Contractor fails, within a reasonable time after the written notice from County, to correct defective Work or to remove and replace rejected defective Work as required by County, or if Contractor fails to perform the Work in accordance with the Contract Documents, or if Contractor fails to comply with any of the provisions of the Contract Documents, County may, after seven (7) days' written notice to Contractor, correct and remedy any such deficiency. To the extent necessary to complete corrective and remedial action, County may exclude Contractor from any or all of the Project site, take possession of all or any part of the Work, and suspend Contractor's services related thereto, take possessions of Contractor's tools, appliances, construction equipment and machinery at the Project site

and incorporate in the Work all materials and equipment stored at the Project site or for which County has paid Contractor but which are stored elsewhere. Contractor shall allow County, and their respective representatives, agents, and employees such access to the Project site as may be necessary to enable County to exercise the rights and remedies under this Subsection. All direct, indirect and consequential costs of County in exercising such rights and remedies shall be charged against Contractor, and a Change Order shall be issued, incorporating the necessary revisions to the Contract Documents, including an appropriate decrease to the Contract Amount. Such direct, indirect and consequential costs shall include, but not be limited to, fees and charges of engineers, architects, attorneys and other professionals, all court and arbitration costs and all costs of repair and replacement of work or others destroyed or damaged by correction, removal or replacement of Contractor's defective Work. Contractor shall not be allowed an extension of the Contract Time because of any delay in performance of the Work attributable to the exercise by County of County's rights and remedies hereunder.

Section 25. <u>SUPERVISION AND SUPERINTENDENTS.</u>

25.1. Contractor shall supervise and direct the Work competently and efficiently, devoting such attention thereto and applying such skills and expertise as may be necessary to perform the Work in accordance with the Contract Documents. Contractor shall be responsible to see that the finished Work complies accurately with the Contract Documents. Contractor shall keep on the Work at all times during its progress a competent resident superintendent acceptable to the County, who shall not be replaced without prior written notice to County except under extraordinary circumstances. The resident superintendent shall possess Florida Department of Transportation approved training and certifications applicable to the Work, including but not limited to National Pollutant Discharge Elimination System (NPDES) Stormwater Management and Maintenance of Traffic Control Devices. The superintendent shall be Contractor's representative at the Project site and shall have authority to act on behalf of Contractor. All communications given to the superintendent shall be as binding as if given to the Contractor. County shall have the right to direct Contractor to remove and replace its Project superintendent, with or without cause.

Section 26. <u>PROTECTION OF WORK.</u>

26.1. Contractor shall fully protect the Work from loss or damage and shall bear the cost of any such loss or damage until final payment has been made. If Contractor, or any one for whom Contractor is legally liable, is responsible for any loss or damage to the Work, or other work or materials of County or County's separate contractors, Contractor shall be charged with the same, and any monies necessary to replace such loss or damage shall be deducted from any amounts due Contractor.

26.2. Contractor shall not load nor permit any part of any structure to be loaded in any manner that will endanger the structure, nor shall Contractor subject any part of the Work or adjacent property to stresses or pressures that will endanger it.

Section 27. <u>EMERGENCIES.</u>

27.1. In the event of an emergency affecting the safety or protection of persons or the Work or property at the Project site or adjacent thereto, Contractor, without special instruction or authorization from County is obligated to act to prevent threatened damage, injury or loss. Contractor shall give County written notice within forty-eight (48) hours after the occurrence

of the emergency, if Contractor believes that any significant changes in the Work or variations from the Contract Document have been caused thereby. If the County determines that a change in the Contract Documents is required because of the action taken in response to an emergency, a Change Order shall be issued to document the consequences of the changes or variations. If Contractor fails to provide the forty-eight (48) hour written notice noted above, the Contractor shall be deemed to have waived any right it otherwise may have had to seek an adjustment to the Contract Amount or an extension to the Contract Time.

Section 28. USE OF PREMISES.

28.1. Contractor shall confine all construction equipment, the storage of materials and equipment and the operations of workers to the Project site and land and areas identified in and permitted by the Contract Documents and other lands and areas permitted by law, rights of way, permits and easements, and shall not unreasonably encumber the Project site with construction equipment or other material or equipment. Contractor shall assume full responsibility for any damage to any such land or area, or to the owner or occupant thereof, or any land or areas contiguous thereto, resulting from the performance of the Work.

28.2. Contractor shall provide and maintain in a neat, sanitary condition such accommodation for the use of his employees as may be necessary to comply with the regulations of the State Board of Health or other bodies having jurisdiction. He shall commit no public nuisance.

Section 29. <u>SAFETY.</u>

29.1. The Contractor shall designate in writing the individual responsible for initiating, maintaining and supervising all safety precautions and programs in connection with the Work. The Contractor shall take all necessary precautions for the safety of, and shall provide the necessary protection to prevent damage, injury or loss to:

29.1.1. All employees of the Work and other persons and/or organizations who may be affected thereby;

29.1.2. All the Work and materials and equipment to be incorporated therein, whether in storage on or off the Project site; and

29.1.3. Other property on Project site or adjacent thereto, including trees, shrubs, lawns, walks, pavements, roadways, structures, utilities and any underground structures or improvements not designated for removal, relocation or replacement in the contract documents.

29.2. The Contractor shall comply with all applicable codes, laws, or dinances, rules and regulations of any public body having jurisdiction for the safety of persons or property or to protect them from damage, injury or loss. The Contractor shall erect and maintain all necessary safeguards for such safety and protection. The Contractor shall notify owners of adjacent property and of underground structures and improvements and utility owners when prosecution of the Work may affect them, and shall cooperate with them in the protection, removal, relocation or replacement of their property. Contractor's duties and responsibilities for the safety and protection of the Work shall continue until such time as the Work is completed and final acceptance of same by County has occurred.

29.3. The Contractor shall adhere at all times to the minimum safety guidelines for construction and renovation projects as set out in Exhibit C of this Agreement.

Section 30. PROJECT MEETINGS.

30.1. Prior to the commencement of Work, the Contractor shall attend a pre-construction conference with the County to discuss the Progress Schedule, procedures for handling shop drawings and other submittals, and for processing Applications for Payment, and to establish a working understanding among the parties as to the Work. During the prosecution of the Work, the Contractor shall attend any and all meetings convened by the County with respect to the Project, when directed to do so by County. Contractor shall have its subcontractors and suppliers attend all such meetings (including the pre-construction conference) as may be directed by the County.

EXHIBIT B
PERFORMANCE AND PAYMENT BOND

BOND NO. _____

PERFORMANCE BOND

KNOW ALL MEN BY THESE PRESENTS: That_____(Insert name, address, and phone number of contractor) _____, as Principal, and _____ _____, (Insert full name, home office address and phone number of surety) as Surety, are held and firmly bound unto the Board of County Commissioners for Escambia County, Florida, 223 Palafox Place, Pensacola, Florida 32597-1591, (850) 595-4900, as Obligee in the sum of _____ _____ Dollars ($_____), for the payment whereof we bind ourselves, our heirs, executors, personal representatives, successors and assigns, jointly and severally, firmly by these presents.

WHEREAS, Principal has entered into a contract dated as of the _____ day of_____, 20____, with Obligee for Contract No. _____, _____ (Insert name of project, including legal description, street address of property _____ _____ and general description of improvement) _____ _____in accordance with drawings and specifications, which contract is by reference made a part hereof, and is hereinafter referred to as the Contract.

THE CONDITION OF THIS BOND is that if Principal:

1. Performs the Contract at the times and in the manner prescribed in the Contract; and
2. Pays Obligee any and all losses, damages, costs and attorneys' fees that Obligee sustains because of any default by Principal under the Contract; and
3. Performs the guarantee of all work and materials furnished under the Contract applicable to the work and materials, then this bond is void; otherwise it remains in full force.

The Surety, for value received, hereby stipulates and agrees that no changes, extensions of time, alterations or additions to the terms of the Contract or other work to be performed hereunder, or the specifications referred to therein shall in anywise affect its obligation

under this bond, and it does hereby waive notice of any such changes, extensions of time, alterations or additions to the terms of the Contract or to work or to the specifications.

This instrument shall be construed in all respects as a common law bond.

In no event will the Surety be liable in the aggregate to Obligee for more than the penalty sum of this Performance Bond, regardless of the number of suits that may be filed by Obligee.

IN WITNESS WHEREOF, the above parties have executed this instrument this _____ day of __ _____, 20____, the name and corporate seal of each corporate party being hereto affixed and these premises duly signed by its undersigned representative, pursuant to authority of its governing body.

Signed, sealed and delivered
in the presence of:

PRINCIPAL:

_____

By:_____

Name:_____

Its:_____

Witnesses as to Principal

STATE OF _____
COUNTY OF _____

The foregoing instrument was acknowledged before me this __ ___ day of _____, 20_____, by ____ _____, as _____, of _____, a _____ corporation, on behalf of the corporation. He/she is personally known to me **OR** has produced _____ as identification and did (did not) take an oath.

My Commission Expires:

_____
(Signature)

Name:_____
(Legibly Printed)

(AFFIX OFFICIAL SEAL)

Notary Public, State of _____

Serial No., If Any: _____

ATTEST:

SURETY:_____
(Printed Name)

_____

_____

_____

_____
(Business Address)

Witness

_____
(Authorized Signature)

_____

Witness

_____
(Printed Name)

OR

_____

_____
As Attorney In Fact (Attach Power)

_____

_____

_____

Witnesses

_____
(Business Address)

_____
(Printed Name)

_____
(Telephone Number)

STATE OF _____
COUNTY OF _____

The foregoing instrument was acknowledged before me this __ ___ day of _____, 20 ____, by ____ _____, as _____ of _____ as Surety, on behalf of Surety. He/she is personally known to me **OR** has produced _____ as identification and did (did not) take an oath.

My Commission Expires:

_____
(Signature)

Name:_____
(Legibly Printed)

(AFFIX OFFICIAL SEAL)

Notary Public, State of _____

Serial No., If Any: _____

BOND NO. _____

PAYMENT BOND

BY THIS BOND, We, _____ (Insert name, address and phone number of contractor) _____ (hereinafter called the "Principal") and _____ (hereinafter called the "Surety"), (Insert name) located at _____, a surety insurer (Insert address and phone number) chartered and existing under the laws of the State of _____ and authorized to do business in the State of Florida, are held and firmly bound unto the Board of County Commissioners for Escambia County, Florida, 223 Palafox Place, Pensacola, Florida 32597-1591, (850) 595-4900, (hereinafter called the "County") in the sum of _____ ($_____) for payment of which we bind ourselves, our heirs, our personal representatives, our successors and our assignees, jointly and severally.

WHEREAS, Principal and County have reached a mutual agreement relating to Contract No._____

(hereinafter referred to as the "Contract") as of _____ (the bid award date for projects thereto)

for the purpose of _____ (Insert name of project, including legal description, street address of property and general description of _____ improvement.)

_____

_____

said Contract being made a part of this Bond by this reference.

NOW, THEREFORE, THE CONDITION OF THIS BOND IS THAT IF THE PRINCIPAL:

1. Performs the contract dated _____, _____, between Principal and County for construction of _____, the contract being made a part of this bond by reference, at the times and in the manner prescribed in the contract; and

2. Promptly makes payments to all claimants, as defined in Section 255.05(1), Florida Statutes, supplying Principal with labor, materials, or supplies, used directly or indirectly by Principal in the prosecution of the work provided for in the contract; and

3. Pays County all loses, damages, expenses, costs, and attorney's fees, including appellate proceedings, that the County sustains because of a default by Principal under the contract; and

4. Performs the guarantee of all work and materials furnished under the contract for the time specified in the contract, then this bond is void; otherwise it remains in full force.

Any action instituted by a claimant under this bond for payment must be in accordance with the notice and time limitation provisions in Section 255.05(2), Florida Statutes.

BE IT FURTHER KNOWN:

1. Any changes in or under the Contract and compliance or noncompliance with any formalities connected with the said Contract or alterations which may be made in the terms of the said Contract, or in the work to be done under it, or the giving by the County of any extension of time for the performance of the said Contract, or any other forbearance on the part of the County or Principal to the other, shall not in any way release the Principal and the Surety, or either of them, their heirs, personal representatives, successors or assigns from liability hereunder, notice to the Surety of any such changes, alterations, extensions or forbearance being hereby waived.

2. Certain claimants seeking the protection of this Bond must timely comply with the strict requirements set forth in Section 255.05, Florida Statutes, and as otherwise provided by law.

3. As concerns payment for labor, materials and supplies, as affects certain claimants, no legal action shall be instituted against the Principal or Surety on this Bond after one (1) year from the performance of labor or the completion of delivery of the materials or supplies as is specifically mandated pursuant to Section 255.05, Florida Statutes.

THIS BOND DATED THE _____ DAY OF _____, 20____ (the date of issue by the Surety or by the Surety's agent and the date of such agents power-of-attorney).

Signed, sealed and delivered
in the presence of:

PRINCIPAL:

_____

_____

By:_____

Name:_____

_____

Its:_____

Witnesses as to Principal

STATE OF _____
COUNTY OF _____

The foregoing instrument was acknowledged before me this ____ _ day of _____, 20 ____, by _____ _____, as _____, of __ _____, a _____ corporation, on behalf of the corporation. He/she is personally known to me **OR** has produced _____ as identification and did (did not) take an oath.

My Commission Expires: _____
(Signature)

Name:_____
(Legibly Printed)

(AFFIX OFFICIAL SEAL)

Notary Public, State of _____
Serial No., If Any: _____

ATTEST:

SURETY:_____
(Printed Name)

_____

_____

_____

_____
(Business Address)

Witness

_____
(Authorized Signature)

_____

Witness

_____
(Printed Name)

OR

_____

_____
As Attorney In Fact (Attach Power)

_____

_____

_____

Witnesses

_____
(Business Address)

_____
(Printed Name)

_____
(Telephone Number)

STATE OF _____

COUNTY OF _____

The foregoing instrument was acknowledged before me this ____ _ day of _____, 20 ____, by _____, as _____ of _____ as Surety, on behalf of Surety. He/she is personally known to me **OR** has produced _____ as identification and did (did not) take an oath.

My Commission Expires:

_____
(Signature)
Name:_____
(Legibly Printed)

(AFFIX OFFICIAL SEAL)

Notary Public, State of _____
Serial No., If Any: _____

EXHIBIT C
INSURANCE AND SAFETY

INSURANCE - BASIC COVERAGES REQUIRED

The Contractor shall procure and maintain the following described insurance, except for coverages specifically waived by the County. Such policies shall be from insurers with a minimum financial size of VII according to the latest edition of the AM Best Rating Guide. An A or better Best Rating is "preferred"; however, other ratings if "Secure Best Ratings" may be considered. Such policies shall provide coverages for any or all claims which may arise out of, or result from, the services, work and operations carried out pursuant to and under the requirements of the Contract Documents, whether such services, work and operations be by the Contractor, its employees, or by subcontractor(s), or any one employed by or under the supervision of any of them, or for whose acts any of them may be legally liable.

The Contractor shall require, and shall be responsible for assuring throughout the time the Agreement is in effect, that any and all of its subcontractors obtain and maintain until the completion of that subcontractor's work, such of the insurance coverages described herein as are required by law to be provided on behalf of their employees and others.

The required insurance shall be obtained and written for not less than the limits of liability specified hereinafter, or as required by law, whichever is greater.

These insurance requirements shall not limit the liability of the Contractor. The County does not represent these types or amounts of insurance to be sufficient or adequate to protect the Contractor's interests or liabilities, but are merely minimums.

Except for workers compensation and professional liability, the Contractor's insurance policies shall be endorsed to name Escambia County as an additional insured to the extent of its interests arising from this agreement, contract or lease.

The Contractor waives its right of recovery against the County, to the extent permitted by its insurance policies.

The Contractor's deductibles/self-insured retentions shall be disclosed to the County and may be disapproved by the County. They shall be reduced or eliminated at the option of the County. The Contractor is responsible for the amount of any deductible or self-insured retention.

Insurance required of the Contractor or any other insurance of the Contractor shall be considered primary, and insurance of the County, if any, shall be considered excess, as may be applicable to claims obligations which arise out of this agreement, contract or lease.

Workers Compensation Coverage
The Contractor shall purchase and maintain workers compensation insurance for all

workers compensation obligations imposed by state law and with employers liability limits of at least $100,000 each accident and $100,000 each employee/$500,000 policy limit for disease, or a valid certificate of exemption issued by the state of Florida, or an affidavit in accordance with the provisions of Florida Workers Compensation law.

Contractor shall also purchase any other coverages required by law for the benefit of employees.

General, Automobile And Excess Or Umbrella Liability Coverage
The Contractor shall purchase and maintain coverage on forms no more restrictive than the latest editions of the Commercial General Liability and Business Auto policies of the Insurance Services Office.

Minimum limits of $1,000,000 per occurrence for all liability must be provided, with excess or umbrella insurance making up the difference, if any, between the policy limits of underlying policies (including employers liability required in the Workers Compensation Coverage section) and the total amount of coverage required.

General Liability Coverage - Occurrence Form Required
Coverage A shall include bodily injury and property damage liability for premises, operations, products and completed operations, independent contractors, contractual liability covering this agreement, contractor lease, broad form property damage coverages, and property damage resulting from explosion, collapse or underground (x,c,u) exposures.

Coverage B shall include personal injury.

Coverage C, medical payments, is not required.

The Contractor is required to continue to purchase products and completed operations coverage, at least to satisfy this agreement, contractor lease, for a minimum of three years beyond the County's acceptance of renovation or construction projects.

Business Auto Liability Coverage
Business Auto Liability coverage is to include bodily injury and property damage arising out of ownership, maintenance or use of any auto, including owned, nonowned and hired automobiles and employee nonownership use.

Excess or Umbrella Liability Coverage
Umbrella Liability insurance is preferred, but an Excess Liability equivalent may be allowed. Whichever type of coverage is provided, it shall not be more restrictive than the underlying insurance policy coverages. Umbrella coverage shall drop down to provide coverage where the underlying limits are exhausted.

Evidence/Certificates of Insurance
Required insurance shall be documented in Certificates of Insurance. If and when required by the County, Certificates of Insurance shall be accompanied by documentation that is acceptable to the County establishing that the insurance agent and/or agency

issuing the Certificate of Insurance has been duly authorized, in writing, to do so by and on behalf of each insurance company underwriting the insurance coverages(s) indicated on each Certificate of Insurance.

New Certificates of Insurance are to be provided to the County at least 30 days prior to coverage renewals. Failure of the Contractor to provide the County with such renewal certificates may be considered justification for the County to terminate this agreement, contract or lease.

Certificates should contain the following additional information.

1. Indicate that Escambia County is an additional insured on the general liability policy.
2. Include a reference to the project and the Office of Purchasing number.
3. Disclose any self-insured retentions in excess of $1,000.
4. Designate Escambia County as the certificate holder as follows:
   Escambia County
   Attention: Claudia Simmons, Manager
   Office of Purchasing
   P.O. Box 1591
   Pensacola, FL 32597-1591
   Fax (850) 595-4805
5. Indicate that the County shall be notified at least 30 days in advance of cancellation.

Receipt of certificates or other documentation of insurance or policies or copies of policies by the County, or by any of its representatives, which indicate less coverage than required does not constitute a waiver of the Contractor's obligation to fulfill the insurance requirements herein.

If requested by the County, the Contractor shall furnish complete copies of the Contractor's insurance policies, forms and endorsements, and/or such additional information with respect to its insurance as may be requested.

For Commercial General Liability coverage the Contractor shall, at the option of the County, provide an indication of the amount of claims payments or reserves chargeable to the aggregate amount of liability coverage.

ENDORSEMENTS/ADDITIONAL INSURANCE

If checked below, the County requires the following endorsements or additional types of insurance.

__ **TERMINATION/ADVERSE CHANGE ENDORSEMENT**
All of Contractor's policies, except for professional liability and workers compensation insurance, are to be endorsed, and the Contractor's Certificate(s) of Insurance shall state, that the County shall be notified at least 30 days in advance of cancellation, nonrenewal or adverse change.

__ **PROPERTY COVERAGE FOR LEASES**
The Contractor shall procure and maintain for the life of the lease, all risk/special perils (including sinkhole) property insurance (or its equivalent) to cover loss resulting from damage to or destruction of the building and personal property/contents. The policy shall cover 100 % replacement cost, and shall include an agreed value endorsement to waive coinsurance.

Coverage shall also include continued full payment of rents to the County for up to one year after damage or destruction of the property

__ **COMMERCIAL GENERAL LIABILITY COVERAGE PROJECT AGGREGATE**
Because the Commercial General Liability form of coverage includes an annual aggregate limitation on the amount of insurance provided, a separate project aggregate limit of $_ _____ is required by the County for this agreement or contract.

__ **LIQUOR LIABILITY**
In anticipation of alcohol being served, the Contractor shall provide evidence of coverage for liquor liability in an amount equal to the general/umbrella/excess liability coverage. If the general liability insurance covers liquor liability (e.g. host or other coverage), the Contractor's agent or insurer should provide written documentation to confirm that coverage already applies to this agreement, contract or lease. If needed coverage is not included in the general/umbrella/excess liability policy(ies), the policy(ies) must be endorsed to extend coverage for liquor liability, or a separate policy must be purchased to provide liquor liability coverage in the amount required.

__ **OWNERS PROTECTIVE LIABILITY COVERAGE**
For renovation or construction contracts the Contractor shall provide for the County an owners protective liability insurance policy (preferably through the Contractor's insurer) in the name of the County.

This is redundant coverage if the County is named as an additional insured in the Contractor's Commercial General Liability insurance policy. However, this separate policy may be the only source of coverage if the Contractor's liability

coverage limit is used up by other claims.

__ **BUILDERS RISK COVERAGE**

Builders Risk insurance is to be purchased to cover subject property for all risks of loss, subject to a waiver of coinsurance, and covering off-site storage, transit and installation risks as indicated in the Installation Floater and Motor Truck Cargo insurance described hereafter, if such coverages are not separately provided.

The Builders Risk insurance is to be endorsed to cover the interests of all parties, including the County and all contractors and subcontractors. The insurance is to be endorsed to grant permission to occupy.

__ **INSTALLATION FLOATER COVERAGE**

Installation Floater insurance is to be purchased when Builder's Risk insurance is inappropriate, or when Builder's Risk insurance will not respond, to cover damage or destruction to renovations, repairs or equipment being installed or otherwise being handled or stored by the Contractor, including off-site storage, transit and installation. The amount of coverage should be adequate to provide full replacement value of the property, repairs, additions or equipment being installed, otherwise being handled or stored on or off premises. All risks coverage is preferred.

__ **MOTOR TRUCK CARGO COVERAGE**

If the Installation Floater insurance does not provide transportation coverage, separate Motor Truck Cargo or Transportation insurance is to be provided for materials or equipment transported in the Contractor's or other vehicles from place of receipt to building sites or other storage sites. All risks coverage is preferred.

__ **CONTRACTOR'S EQUIPMENT COVERAGE**

Contractor's Equipment insurance is to be purchased to cover loss of equipment and machinery utilized in the performance of work by the Contractor. All risks coverage is preferred.

__ **FIDELITY/DISHONESTY COVERAGE - FOR EMPLOYER**

Fidelity/Dishonesty insurance is to be purchased to cover dishonest acts of the Contractor=s employees, including but not limited to theft of vehicles, materials, supplies, equipment, tools, etc., especially property necessary to work performed.

__ **FIDELITY/DISHONESTY/LIABILITY COVERAGE - FOR COUNTY**

Fidelity/Dishonesty/Liability insurance is to be purchased or extended to cover dishonest acts of the Contractor=s employees resulting in loss to the County.

__ **GARAGE LIABILITY COVERAGE**

Garage Liability insurance is to be purchased to cover the Other Party and its employees for its garage and related operations while in the care, custody and control of the County's vehicles.

__ **GARAGEKEEPERS COVERAGE (LEGAL LIABILITY FORM)**

Garagekeepers Liability insurance is to be purchased to cover the Other Party's liability for damage or other loss, including comprehensive and collision risks, to the County's vehicles while in the care, custody and control of the Other Party. This form of coverage responds only when the Other Party is legally liable for the loss.

__ **GARAGEKEEPERS COVERAGE (DIRECT-EXCESS FORM)**

Garagekeepers Liability insurance is to be purchased to cover damage or other loss, including comprehensive and collision risks, to the County's vehicles while in the care, custody and control of the Other Party. This form of coverage responds on a legal liability basis, and also without regard to legal liability on an excess basis over any other collectible insurance.

__ **WATERCRAFT LIABILITY COVERAGE**

Because the Contractor's provision of services involves utilization of watercraft, watercraft liability coverage must be provided to include bodily injury and property damage arising out of ownership, maintenance or use of any watercraft, including owned, nonowned and hired.

Coverage may be provided in the form of an endorsement to the general liability policy, or in the form of a separate policy covering Watercraft Liability or Protection and Indemnity.

__ **UNITED STATES LONGSHOREMEN AND HARBORWORKERS ACT COVERAGE**

The Workers Compensation policy is to be endorsed to include United States Longshoremen and Harborworkers Act Coverage for exposures which may arise from this agreement or contract.

_X_ **JONES ACT COVERAGE**

The Workers Compensation policy is to be endorsed to include Jones Act Coverage for exposures, which may arise from this agreement or contract.

__ **AIRCRAFT LIABILITY COVERAGE**

Because the Contractor's provision of services involves utilization of aircraft, aircraft liability coverage must be provided to include bodily injury and property damage arising out of ownership, maintenance or use of any aircraft, including owned, nonowned and hired.

The minimum limits of coverage shall be $__,000,000 per occurrence, Combined Single Limit for Bodily Injury (including passenger liability) and Property Damage.

_X_ **POLLUTION/ENVIRONMENTAL IMPAIRMENT LIABILITY COVERAGE**

Pollution/environmental impairment liability insurance is to be purchased to cover pollution and/or environmental impairment which may arise from this agreement or contract.

__ **PROFESSIONAL LIABILITY/MALPRACTICE/ERRORS OR OMISSIONS INSURANCE**

The Contractor shall purchase and maintain professional liability or malpractice or errors or omissions insurance with minimum limits of $_,000,000 per occurrence.

If a claims made form of coverage is provided, the retroactive date of coverage shall be no later than the inception date of claims made coverage, unless the prior policy was extended indefinitely to cover prior acts.

Coverage shall be extended beyond the policy year either by a supplemental extended reporting period (ERP) of as great duration as available, and with no less coverage and with reinstated aggregate limits, or by requiring that any new policy provide a retroactive date no later than the inception date of claims made coverage.

MINIMUM PROJECT SAFETY REQUIREMENTS

The following safety requirements represent the minimum conditions which shall be met by all Contractors and subcontractors performing work for Escambia County. The Contractor shall be responsible to ensure his compliance with all State and Federal safety regulations as specified in County contract documents. Reported or observed violations of OSHA (29 CFR 1910 or 1926) and other regulations shall be brought to the attention of the County project manager and County Safety Office and shall be immediately corrected by the Contractor. Failure to comply with required safety procedures shall result in the suspension of the Work of the Contractor until such time as his operations are brought into compliance. Items which are not corrected or that are disputed by the Contractor may be referred by the County to either the project insurance coordinator or the Department of Labor and Employment Security, Division of Safety, for inspection or interpretation. The Contractor shall take reasonable precautions for work place safety and shall provide reasonable protection to prevent damage, injury, or loss to employees on the work site and to other persons who may be affected by the Work.

(1) Prior to the commencement of the project, the Contractor and all subcontractors shall provide to the County a written copy of their respective safety and health plans for review as part of the pre-submittal bid package.

(2) The Contractor shall establish and maintain an access control system at the work site, including a daily sign-in log, for all visitors, including County and regulatory personnel. Prior to commencement of construction, the project manager may designate specific individuals for routine access so that their duties are not impeded. All visitors that are not pre-approved for admittance shall be escorted through the project by either a Contractor representative or by the project manager or designee.

(3) The Contractor shall provide all necessary safety equipment for County staff, employees, and visitors to enter the work site. This equipment may include hard hats, hearing protection, safety glasses, or any other safety items deemed necessary by the Contractor or required by State or Federal safety regulations.

(4) Construction vehicles on the work site shall always be operated in a safe manner. The Contractor shall take appropriate action to ensure the safety of County staff, visitors, and the general public while operating work vehicles at a controlled construction site. Where conditions warrant, or at the request of the County, temporary barriers shall also be established for these traffic areas.

(5) The Contractor shall prominently mark the work site and ensure its security. Site security shall include appropriate fencing, barricades, warning tape, covered walkways and warning signs. In no instance shall a work site be accessible, without obvious warning, to County staff, visitors, or the general public. At a minimum, the project site shall be posted with the

appropriate trespass warning signs as specified in Section 810.09(2)(d), Florida Statutes: THIS AREA IS A DESIGNATED CONSTRUCTION SITE; ANYONE TRESPASSING ON THIS PROPERTY SHALL, UPON CONVICTION, BE GUILTY OF A FELONY; DANGER, CONSTRUCTION SITE. AUTHORIZED PERSONNEL ONLY, and other general safety warning signs, i.e., HARD HAT AREA, as are deemed necessary by the Contractor and project manager.

(6) In the event barricading of a work site is not feasible, alternative measures may be used upon prior approval by the County safety Office. Alternative measures may include, but are not limited to, working during off hours such as nights, weekends, or holidays, or the providing of temporary accommodations for building occupants (to be prearranged, if necessary, at the discretion of the County).

(7) The Contractor shall ensure compliance with all fire safety codes at the work site, especially as to egress, during the construction phase of an occupied facility. In no instance, (except where impractical and with the prior approval of the County Safety Office and the appropriate life safety code inspector), shall the life safety code components of an occupied facility be reduced or otherwise compromised. A set of these construction plans, with a signature of approval by the appropriate life safety code inspector, shall be kept at each construction site and available for routine inspection. The Contractor shall communicate with each subcontractor as to scheduling of events that may pose hazards or inconveniences to building occupants. The Contractor shall also ensure that appropriate scheduling information is also conveyed to the project manager.

(8) Noise, dust, and the use of chemical products may create inside health hazards at the work site to building occupants requiring that the Contractor to adhere to the following guidelines at a minimum:

(a) The Contractor shall initiate construction and engineering safety controls to minimize exposure of dusts, noise, and chemical odors to building occupants. These controls may involve the construction or use of temporary walls, plastic barriers, mechanical ventilation, elimination of make-up air returns from work areas, pressurizing occupied areas, or a combination of several methods. The Contractor shall coordinate all such engineering efforts with the project manager, and these control measures shall require prior approval by the County Safety Office. In cases where these efforts may not be feasible, alternative work schedules on evenings and weekends may be instituted as a part of this process.

(b) Material Safety Data Sheets (MSDS) shall be provided for all hazardous substances used on the project or brought on the job site. These products include, but are not limited to, paints, solvents, roofing compounds, and cleaning compounds.

(c) Appropriate precautions shall be taken to prevent occupant exposure to

hazardous respirable dusts, contaminants, and fumes from welding, cutting, or drilling of concrete and masonry, or the operation of internal combustion engines. The Contractor shall also determine whether respirable crystalline silica, which is a potential carcinogen contained in many building products, is present at the work site. Control of dusts from these types of products and operations shall be an essential safety requirement for the Contractor.

(d) The Contractor should be aware of other buildings adjacent to his work areas and shall be prepared to take necessary actions to prevent the spread of dusts and fumes to those facilities.

(9) The Contractor shall ensure that all emergency notifications, including those for fires and medical needs, shall be promptly made by dialing County 911 dispatchers. The Caller should state the exact location of the work site emergency, the nature of the emergency, and specifically indicate if medical or fire services are needed.

(10) The Contractor agrees and understands that all County construction/renovation sites shall be subject to periodic inspection by life safety code inspectors, Florida Department of Labor and Employment Security, Division of Safety, Occupational Safety and Health Administration, Florida Department of Environmental Protection, Environmental Protection Agency, and other Federal, State, or County regulatory agencies.

(11) The Contractor shall provide adequate refuse containers for the disposal of construction debris. Refuse shall not be allowed to accumulate on the project site grounds, and the Contractor shall ensure that these containers are subsequently emptied on a regular basis.

(12) Water runoff and soil erosion from the project site shall be controlled by the Contractor pursuant to the regulations of the Florida Department of Environmental Protection.

(13) Water-based paint and stain products shall be used by the Contractor in the place of solvent-based products where the application so permits. Use of organic solvent-based products shall be used only where absolutely necessary and with the prior approval of the project manager. Lead-containing paints shall not be normally used or specified for any application. If the use of lead-containing paint is essential for a specific application, prior approval from the project manager or County Safety Office shall be obtained before their use.

(14) The use of any products containing toxic metals, especially those regulated by Resource Conservation and Recovery Act (RCRA), (i.e. lead, chromium, barium, silver, arsenic, cadmium, mercury, selenium), on the work site shall be avoided. Prior approval for use of these metals shall be obtained by the Contractor from the project manager.

(15) The use of any radioactive materials by the Contractor on project sites shall require pre-approval. Copies of appropriate certifications, licenses, testing, and inspection records shall be provided by the Contractor to the project manager and County Safety Office for review.

(16) The County maintains programs for the identification and abatement of asbestos containing building materials. Asbestos abatement can only be performed by state licensed asbestos abatement contractors. General contractors, therefore, shall not be authorized to remove or disturb any asbestos containing materials. Although efforts are made to identify or remove such asbestos containing materials prior to renovations, the possibility exists that asbestos materials may be encountered at a work site. If so, Contractors who encounter such materials shall immediately stop work and notify the project manager or the County Safety Office.

(17) The above-cited guidelines represent minimum expectations and actions which shall be taken by Contractors while under contract for County construction and renovation projects. These guidelines are not all inclusive and will be revised as necessary. In the event these guidelines conflict with other contract documents, the most stringent application shall apply. Any questions or disputes should be brought to the immediate attention of the project manager or County Safety Office.

EXHIBIT D

RELEASE AND AFFIDAVIT

COUNTY OF ESCAMBIA)
)
STATE OF FLORIDA)

Before me, the undersigned authority, personally appeared _____, who after being duly sworn, deposes and says:

(1) In accordance with the Contract Documents and in consideration of $_____ paid, _____ ("Contractor") releases and waives for itself and its subcontractors, materialmen, successors and assigns, all claims demands, costs and expenses, whether in contract or in tort, against the Board of County Commissioners of Escambia County, Florida, ("County") relating in any way to the performance of the Agreement between Contractor and County dated _____, 20____, for the period from __ _____ to _____.

(2) Contractor certifies for itself and its subcontractors, materialmen, successors and assigns, that all charges for labor, materials, supplies, lands, licenses and other expenses for which County might be sued or for which a lien or a demand against any payment bond might be filed, have been fully satisfied and paid.

(3) Contractor agrees to indemnify, defend and save harmless County from all demands or suits, actions, claims of liens or other charges filed or asserted against the County arising out of the performance by Contractor of the Work covered by this Release and Affidavit.

(4) This Release and Affidavit is given in connection with Contractor's (monthly/final) Application for Payment No. _____.

CONTRACTOR:

_____

By:_____

Its:_____
President

Date:_____

[Corporate Seal]

STATE OF FLORIDA

COUNTY OF ESCAMBIA

The foregoing instrument was acknowledged before me this ____ _ day of _____, 20___, by _____, as _____ of _ _____, a _____ corporation, on behalf of the corporation. He/she is personally known to me **OR** has produced _ _____ as identification and did (did not) take an oath.

My Commission Expires:

_____
(Signature)

Name:_____
(Legibly Printed)

(AFFIX OFFICIAL SEAL)

Notary Public, State of _____
Serial No., If Any:_____

EXHIBIT E

FORM OF CONTRACT APPLICATION FOR PAYMENT

- AIA DOCUMENT #G702, 1992 EDITION
- AIA DOCUMENT #G703, 1992 EDITION

EXHIBIT F

CHANGE ORDER

CHANGE ORDER NO. _____ CONTRACT NO . _____

TO: _____
_____
_____
_____

DATE: _____

PROJECT NAME _____

PROJECT NO. _____

Under our AGREEMENT dated _____, 20____.

****

You her eby ar e au thorized and directed t o m ake the following c hange(s) i n accordance with terms and conditions of the Agreement:

FOR T HE (Additive) (Deductive) S um of: _____ ($_____).

Original Agreement Amount $_____

Sum of Previous Changes $_____

This Change Order (Add) (Deduct) $_____

Present Agreement Amount $_____

The time for completion shall be (increased/decreased) by _____ __ (____) calendar days due to this Change Order. Accordingly, the Contract Time is now _____ (____) calendar days and

the final completion date is _____. Your acceptance of this Change Order shall constitute a modification to our Agreement and will be performed subject to all the same terms and conditions in our Agreement indicated above, as fully as if the same were repeated in this acceptance.

The adjustment, if any, to this Agreement shall constitute a full and final settlement of any and all claims arising out of or related to the change set forth herein, including claims for impact and delay costs.

The Contract Administrator has directed the Contractor to increase the penal sum of the existing Performance and Payment Bonds or to obtain additional bonds on the basis of a $25,000.00 or greater value Change Order.

☐ Check if applicable and provide written confirmation from the bonding company/agent (attorney-in-fact) that the amount of the Performance and Payment bonds have been adjusted to 100% of the new contract amount.

Accepted: _____, 20____

By:_____
Contractor

By:_____
Architect/Engineer

By:_____
Owner

PART II INFORMATION REQUIRED

2-1 REQUIRED INFORMATION:

- Contact information for respondent, including name of company or entity, contact person(s), address, telephone numbers, email addresses.

- History and list of completed projects relating to bridges, docks and boat ramps within the past five (5) years.

- SWORN STATEMENT PURSUANT TO SECTION (287.133) (3)(A), FLORIDA STATUTES, ON ENTITY CRIMES.

- DRUG-FREE WORKPLACE FORM

- INFORMATION SHEET FOR TRANSACTIONS AND CONVEYANCES CORPORATE IDENTIFICATION.

- CERTIFICATE OF AUTHORITY TO DO BUSINESS FROM THE STATE OF FLORIDA

- FLORIDA DEPARTMENT OF BUSINESS AND PROFESSIONAL REGULATION – LICENSE(S), CERTIFICATION(S), AND/OR REGISTRATION(S)

- GENERAL CONTRACTOR'S LICENSE, MARINE CONTRACTOR'S LICENSE

- CERTIFICATE OF INSURANCE WITH INSURANCE REQUIREMENT

SWORN STATEMENT PURSUANT TO SECTION 287.133(3)(a), FLORIDA STATUTES, ON ENTITY CRIMES

1. This sworn statement is submitted to _____
(print name of the public entity)

by_____
(print individual's name and title)

for_____
(print name of entity submitting sworn statement)

whose business address is

_____

_____

and (if applicable) its Federal Employer Identification Number (FEIN) is:
_____

(If the entity has no FEIN, include the Social Security Number of the Individual signing this sworn statement: _____

2. I understand that a "public entity crime" as defined in Paragraph 287.133(1)(g), **Florida Statutes**, means a violation of any state or federal law by a person with respect to and directly related to the transaction of business with any public entity or with an agency or political subdivision of any other state or of the United States, including, but not limited to, any bid or contract for goods or services to be provided to any public entity or an agency or political subdivision or any other state or of the United States and involving antitrust, fraud, theft, bribery, collusion, racketeering, conspiracy, or material misrepresentation.

3. I understand that "convicted" or "conviction" as defined in Paragraph 287.133(1)(b), **Florida Statutes**, means a finding of guilt or a conviction of a public entity crime, with or without an adjudication of guilt, in any federal or state trial court of record relating to charges brought by indictment or information after July 1, 1989, as a result of jury verdict, nonjury trial, or entry of a plea of guilty or nolo contendere.

4. I understand that an "affiliate" as defined in Paragraph 287.133(1)(a), **FloridaStatutes**, means:

   a. A predecessor or successor of a person convicted of a public entity crime; or
   b. An entity under the control any natural person who is active in the management of the entity and who has been convicted of a public entity crime. The term "affiliate" includes those officers, directors, executives, partners, shareholders, employees, members, and agents who are active in the management of an affiliate. The ownership by one person of shares constituting a controlling interest in another person or a pooling of equipment or income among persons when not for fair market value under an arm's length agreement, shall be a prima facie case that one person controls another person. A person who knowingly enters into a joint venture with a person who has been convicted of a public entity crime in Florida during the preceding 36 months shall be considered an affiliate.

c. I understand that a "person" as defined in Paragraph 287.133(1)(e), **Florida Statutes**, means any natural person or entity organized under the laws of any state or of the United States with the legal power to enter into binding contract and which bids or applies to bid on contracts for the provision of goods or services let by a public entity, or which otherwise transacts or applies to transact business with a public entity. The term "person" includes those officers, directors, executives, partners, shareholders, employees, members, and agents who are active in management of an entity.

d. Based on information and belief, the statement, which I have marked below, is true in relation to the entity submitting this sworn statement. **(indicate which statement applies.)**

_____Neither the entity submitting this sworn statement, nor any of its officers, directors, executives, partners, shareholders, employees, members, or agents who are active in the management of the entity, nor any affiliate of the entity has been charged with and convicted of a public entity crime subsequent to July 1, 1989.

_____The entity submitting this sworn statement, or one or more of its officers, directors, executives, partners, shareholders, employees, members, or agents who are active in the management of the entity, or an affiliate of the entity has been charged with and convicted of a public entity crime subsequent to July 1, 1989.

_____The entity submitting this sworn statement, or one or more of its officers, directors, executives, partners, shareholders, employees, members, or agents who are active in the management of the entity, or an affiliate of the entity has been charged with and convicted of a public entity crime subsequent to July 1, 1989. However, there has been a subsequent proceeding before a Hearing Officer of the State of Florida, Division of Administrative Hearings and the Final Order entered by the Hearing Officer determined that it was not in the public interest to place the entity submitting this sworn statement on the convicted vendor list. **(attach a copy of the final order).**

I UNDERSTAND THAT THE SUBMISSION OF THIS FORM TO THE CONTRACTING OFFICER FOR THE PUBLIC ENTITY IDENTIFIED IN PARAGRAPH 1 (ONE) ABOVE IS FOR THAT PUBLIC ENTITY ONLY AND, THAT HIS FORM IS VALID THOROUGH DECEMBER 31 OF THE CALENDAR YEAR IN WHICH IT IS FILED. I ALSO UNDERSTAND THAT I AM REQUIRED TO INFORM THE PUBLIC ENTITY PRIOR TO ENTERING INTO A CONTRACT IN EXCESS OF THE THRESHOLD AMOUNT PROVIDED IN SECTION 287.017, FLORIDA STATUTES FOR CATEGORY TWO OF ANY CHANGE IN THE INFORMATION CONTAINED IN THIS FORM.

_____
(signature)

Sworn to an subscribed before me this_____ day of _____, 20_____

Personally known _____
OR produced identification_____

_____
(Type of identification)

_____
Notary Public - State of_____

My commission expires_____

_____
(Printed typed or stamped commissioned name of notary public)

Drug-Free Workplace Form

The undersigned vendor, in accordance with Florida Statute 287.087 hereby certifies that _____does:
Name of Business

1. Publish a statement notifying employees that the unlawful manufacture, distribution, dispensing, possession, or use of a controlled substance is prohibited in the workplace and specifying the actions that will be taken against employees for violations of such prohibition.

2. Inform employees about the dangers of drug abuse in the workplace, the business's policy of maintaining a drug-free workplace, any available drug counseling, rehabilitation, employee assistance programs and the penalties that may be imposed upon employees for drug abuse violations.

3. Give each employee engaged in providing the commodities or contractual services that are under bid a copy of the statement specified in Paragraph 1.

4. In the statement specified in Paragraph 1, notify the employees that, as a condition of working on the commodities or contractual services that are under bid, the employee will abide by the terms of the statement and will notify the employer of any conviction of, or plea of guilty or nolo contendere to, any violation of Chapter 893 or of any controlled substance law of the United States or any state, for a violation occurring in the workplace no later than five (5) days after such conviction.

5. Impose a sanction on, or require the satisfactory participation in a drug assistance or rehabilitation program if such is available in the employee's community, by any employee who is so convicted.

6. Make a good faith effort to continue to maintain a drug-free workplace through implementation of Paragraphs 1 through 5.

Check one:

_____ As the person authorized to sign this statement, I certify that this firm complies fully with above requirements.

_____ As the person authorized to sign this statement, this firm **does not** comply fully with the above requirements.

_____
Offeror's Signature

_____
Date

Information Sheet
for Transactions and Conveyances
Corporation Identification

The following information will be provided to the Escambia County Legal Department for incorporation in legal documents. It is, therefore, vital all information is accurate and complete. Please be certain all spelling, capitalization, etc. is exactly as registered with the state or federal government.

(Please Circle One)

Is this a Florida Corporation: Yes or No

If not a Florida Corporation,
In what state was it created: _____
Name as spelled in that State: _____

What kind of corporation is it: "For Profit" or "Not for Profit"

Is it in good standing: Yes or No

Authorized to transact business in Florida: Yes or No

State of Florida Department of State Certificate of Authority Document No.:_____

Does it use a registered fictitious name: Yes or No

Names of Officers:
President:_____Secretary:_____

Vice President:_____Treasurer:_____

Director:_____Director:_____

Other:_____Other:_____

Name of Corporation (As used in Florida):
_____
(Spelled exactly as it is registered with the state or federal government)

Corporate Address:

Post Office Box: _____
City, State Zip: _____
Street Address: _____
City, State, Zip: _____

(Please provide post office box and street address for mail and/or express delivery; also for recorded instruments involving land)

(Please continue and complete page 2)

Federal Identification Number:_____
(For all instruments to be recorded, taxpayer's identification is needed)

Contact person for Company:_____**E-mail:**_____

Telephone Number: _____ **Facsimile Number:**_____

Name of individual who will sign the instrument on behalf of the company:
_____
(Upon Certification of Award, Contract shall be signed by the President or Vice-President. Any other officer shall have permission to sign via a resolution approved by the Board of Directors on behalf of the company. Awarded contractor shall submit a copy of the resolution together with the executed contract to the Office of Purchasing)

(Spelled exactly as it would appear on the instrument)

Title of the individual named above who will sign on behalf of the company:
_____

END

---

(850) 488-9000 Verified by:_____ Date:_____

(Revised 9/18/09)