AERO SPACES HOUSING MULTI-FAMILY

PROJECT NO. 08195-0001
NOV 2021
PERMIT SET - NOT FOR CONSTRUCTION

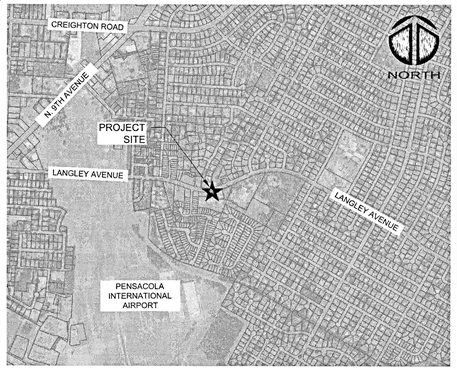

VICINITY MAP 1" = 2000'

PROJECT NAME: AERO SPACES HOUSING MULTI-FAMILY

OWNER/DEVELOPER:
AERO SPACES HOUSING, LLC
1800 YATES AVENUE
PENSACOLA, FL 32503
EMAIL: richardmcolbert@yahoo.com

Approved
ESCAMBIA COUNTY DRC PLAN REVIEW

DRC Chairman Signature: 12-1-21
Date
Printed Name: Sandra Hampton
Development Services Director or Designee

This document has been reviewed in accordance with the requirements of applicable Escambia County Regulations and Ordinances, and does not in any way relieve the submitting Architect, Engineer, Surveyor or other signatory from responsibility of details as drawn. A Development Order (DO) must be obtained through the Development Review Process prior to the commencement of construction. This DO approval does not constitute approval by any other agency. All additional state/federal permits shall be provided to the county prior to approval of a final plat or the issuance of state/federal permits shall be provided to the county prior to approval of a final plat or the issuance of a building permit.

McKIM&CREED
1206 N. Palafox Street
Pensacola, Florida 32501
Phone: (850) 994-9503

CA Lic. No. 29588
www.mckimcreed.com

PROJECT INFORMATION

SITE MAP SCALE: 1" = 200'

Sheet List Table

Sheet Number	Sheet Title
GENERAL	
G-000	COVER SHEET
G-001	GENERAL NOTES, LEGENDS & ABBREVIATIONS
CIVIL - SOUTH SITE	
C-100	EXISTING CONDITIONS PLAN
C-110	DEMOLITION PLAN
C-200	IMPROVEMENTS PLAN
C-201	TURN LANE IMPROVEMENTS
C-210	DIMENSIONING PLAN
C-300	GRADING PLAN
C-400	STORM WATER PLAN
C-410	UTILITY PLAN
C-500	LANDSCAPING PLAN
C-600	ENVIRONMENTAL AND WELLHEAD PROTECTION
DETAILS	
C-910	EROSION CONTROL
C-920	SITE CONSTRUCTION
C-930	DRAINAGE
C-931	DRAINAGE
C-932	EXFILTRATION SYSTEM
C-933	EXFILTRATION SYSTEM
C-934	EXFILTRATION SYSTEM
C-940	UTILITIES

SHEET INDEX

ECUA Engineering Manual Reference Note*

**note shall be inserted in the upper right corner of title sheet*

** applicable only to ECUA infrastructure to be constructed in public ROW or in utility easement; not to be applied to private water/sewer facilities on private property (see Building Code)*

A. ECUA Engineering Manual Incorporated by Reference

The ECUA Engineering Manual, dated December 18, 2014, along with Update # 1 dated September 1, 2016 (hereinafter "Manual"), located at www.ecua.fl.gov, is hereby incorporated by reference into this Project's official contract documents as if fully set forth therein. It is the Contractor's responsibility to be knowledgeable of the Manual's contents and to construct the Project in accordance with the Manual. The Contractor shall provide its employees access to the Manual at all times, via Project site or office, via digital or paper format. In the event of a conflict between the Manual and Plans, Contractor shall consult Engineer of Record for proper resolution.

B. Additional Documents (to be completed by the Engineer of Record)

Does this Project have additional technical specifications or construction details that supplement and/or supersede the Manual listed above? ☐YES NO☐. If yes, Contractor shall construct Project in accordance with said documents as listed and located below:

Document Name	Document Type		Location	
	Specification	Detail	Plans	Project Manual*
	☐	☐	☐	☐
	☐	☐	☐	☐
	☐	☐	☐	☐
	☐	☐	☐	☐

**Project Manuals used only with ECUA CIP Projects*

C. Engineer of Record Responsibilities

The Engineers of Record (EORs) that have affixed their seals and signatures on these plans warrant their portions of the plans have been designed in accordance with the Manual (unless otherwise directed by the ECUA Project Engineer). The EORs shall be knowledgeable of the Manual's contents and shall assume responsibility for its use on this Project.

D. PATRICK JEHLE, JR. LICENSE No. 71528 STATE OF FLORIDA PROFESSIONAL ENGINEER
11/17/21

811 Know what's below. Call before you dig.

PROJECT NO. 08195-0001 AERO SPACES HOUSING MULTI-FAMILY

SUBMITTAL DATE: 10/7/2021

I:\08195\0001\ENG\80-DRAWINGS\CIVIL\SOUTH SITE\G-000 COVER SHEET.DWG ---- 11/19/2021 13:57:47 ALEX MAINIERO

GENERAL NOTES

1. ALL WORK SHALL BE PERFORMED IN ACCORDANCE WITH THE PLANS AND SITE WORK SPECIFICATIONS AND SHALL COMPLY WITH APPLICABLE FEDERAL, STATE AND LOCAL CODES AND OSHA STANDARDS.
2. IN THE CASE OF DISCREPANCY ON THESE DRAWINGS AND CONDITIONS IN THE FIELD, THE MORE STRINGENT REQUIREMENT SHALL BE MET. REPORT ANY DISCREPANCY TO THE ENGINEER PRIOR TO ACTION.
5. LOCATIONS AND ELEVATIONS OF UTILITIES SHOWN ON THE PLANS ARE TO BE CONSIDERED APPROXIMATE ONLY. THE CONTRACTOR MUST EMPLOY THE USE OF GROUND PENETRATING RADAR (GPR) EQUIPMENT BY A QUALIFIED COMPANY AND PERSONNEL TO LOCATE, IDENTIFY, AND PROTECT EXISTING UNDERGROUND UTILITIES IN THE AREA OF WORK. ANY UTILITIES SPOTTED MUST BE DRAWN ON THE SITE PLAN PROVIDED BY THE ARCHITECT/ENGINEER AND SUBMITTED AS PART OF THE AS-BUILT DRAWINGS. NOTIFY UTILITY AND ARCHITECT/ENGINEER OF CONFLICTS BETWEEN EXISTING AND PROPOSED FACILITIES.
6. ALL HANDICAP ACCESSIBLE PARKING SIGNS AND STRIPING SHALL BE IN ACCORDANCE WITH THE AMERICAN WITH DISABILITY ACT (ADA) REQUIREMENTS AND STATE CODE.
7. THE CONTRACTOR SHALL NOTIFY THE APPROPRIATE PUBLIC AGENCY(IES) PRIOR TO COMMENCING WORK WITHIN THEIR JURISDICTION(S).
8. THE CONTRACTOR SHALL MAINTAIN COPIES OF ALL APPLICABLE PERMITS ON-SITE AND SHALL BE RESPONSIBLE TO ADHERE TO ALL PERMIT CONDITIONS DURING CONSTRUCTION.
9. CONTRACTOR SHALL BE RESPONSIBLE FOR PENALTIES/FINES LEVIED DUE TO WORK THAT IS NOT IN ACCORDANCE WITH PERMIT CONDITIONS.
10. THE CONTRACTOR'S ATTENTION IS DIRECTED TO THE PROVISIONS OF THE TRENCH SAFETY ACT (FLORIDA STATUTES, SECTION 553.60 ET. SEQ.) AND THE OCCUPATIONAL SAFETY AND HEALTH ADMINISTRATIVE SAFETY STANDARDS (29 C.F.R. SECTION 1926.650, SUBPART P) WHICH SHALL APPLY TO THIS WORK.
11. THE CONTRACTOR IS RESPONSIBLE FOR REPAIR OF ANY DAMAGE TO ANY EXISTING IMPROVEMENTS, ONSITE OR OFF SITE, SUCH AS PAVEMENT, UTILITIES, STORM DRAINAGE, ETC. THE REPAIR MUST BE APPROVED BY QUALIFIED PROFESSIONAL ENGINEER AND PROPERTY OWNER AND BE EQUAL OR BETTER THAN EXISTING CONDITIONS.
12. CONTRACTOR SHALL OBTAIN ALL PERMITS BEFORE CONSTRUCTION BEGINS.
13. SITE CONTRACTOR SHALL SUPPLY AS-BUILT PLANS INDICATING ALL CHANGES AND DEVIATIONS.
14. ANY DEVIATION FROM THESE PLANS MAY CAUSE THE WORK TO BE UNACCEPTABLE.
15. THE CONTRACTOR SHALL IMMEDIATELY REPORT IN WRITING WITH ADEQUATE SUPPORTING DOCUMENTATION TO THE OWNER AND ENGINEER ANY DISCREPANCIES FOUND BETWEEN THE ACTUAL FIELD CONDITIONS AND THE CONSTRUCTION DOCUMENTS AND SHALL WAIT FOR INSTRUCTION PRIOR TO PROCEEDING WITH WORK.
16. CONTRACTOR AGREES TO REPAIR ANY DAMAGE TO THE PUBLIC RIGHT-OF-WAY IN ACCORDANCE WITH THE STANDARDS OF THE FDOT.

EROSION CONTROL NOTES

1. TEMPORARY STABILIZATION IS REQUIRED FOR ALL SOIL LEFT BARE FOR GREATER THAN 14 DAYS.
2. PERMANENT SOIL STABILIZATION REQUIRED. SEE LANDSCAPE PLANS FOR SOD AND OTHER IMPROVEMENT LOCATIONS.
3. STORMWATER RETENTION AREAS SHOULD BE CONSTRUCTED FIRST TO PREVENT DISCHARGE FROM THE SITE DURING CONSTRUCTION.
4. REQUIRED INSPECTIONS BY CONTRACTOR DURING CONSTRUCTION:
   a. ONCE EACH WEEK OR WITHIN 24 HRS OF A STORM EVENT (GREATER THAN 1/2 IN.) INSPECT ALL CONTROL MEASURES.
   b. REPAIR ALL DAMAGED AREAS WITHIN 24 HRS OF DISCOVERY.
   c. REMOVE ANY BUILT-UP SEDIMENT AROUND FENCES THAT REACHES 1/3 OF THE SILT FENCE HEIGHT.
   d. SILT FENCES SHALL BE INSPECTED FOR DEPTH OF SEDIMENT AND TEARS TO ENSURE FABRIC HAS NOT PULLED AWAY FROM POSTS.
   e. INSPECT ALL TEMPORARY AND PERMANENT SOIL STABILIZATION FOR WASHOUTS OR BARE SPOTS.
   f. INSPECTION REPORTS MUST BE AVAILABLE FOR INSPECTION AT ALL TIMES. THE SITE SUPERINTENDENT SHALL CONDUCT ALL INSPECTIONS AND MAINTAIN REPORTS.
   g. DATES OF ALL MAJOR GRADING ACTIVITIES MUST BE RECORDED AND MAINTAINED WITH SITE INSPECTIONS. WHEN MAJOR GRADING HAS CEASED IN ANY AREA, THE DATE MUST ALSO BE RECORDED.
5. THE SITE SHALL BE KEPT IN AN ORDERLY FASHION, THE CONTRACTOR SHALL ENSURE THE FOLLOWING ITEMS ARE ADDRESSED:
   a. AN EFFORT TO STORE ONLY WHAT IS NEEDED ON THE SITE.
   b. KEEP ALL STORED MATERIALS IN A NEAT AND ORDERLY FASHION IN THE ORIGINAL CONTAINERS WHEN POSSIBLE.
   c. FOLLOW ALL MANUFACTURERS RECOMMENDED PROCEDURES FOR DISPOSAL OF WASTE MATERIAL.
   d. INSPECT DAILY TO ENSURE WASTE MATERIAL IS DISPOSED OF PROPERLY.
   e. COUNTY RESERVES THE RIGHT TO TERMINATE ALL CONSTRUCTION ACTIVITIES UNTIL CONTRACTOR ADEQUATELY INSTALLS, MAINTAINS, AND/OR REPLACES EROSION CONTROL MEASURES TO CONDITION ACCEPTED BY THE COUNTY AT NO ADDITIONAL COST.

SURVEYOR NOTES

1. NORTH AND THE BEARINGS SHOWN HEREON ARE REFERENCED TO THE DEED BEARING OF SOUTH 89 DEGREES 41 MINUTES 35 SECONDS EAST ALONG THE NORTH LINE OF SECTION 14, TOWNSHIP 1 SOUTH, RANGE 29 WEST, ESCAMBIA COUNTY, FLORIDA.
2. THE MEASUREMENTS SHOWN HEREON WERE MADE TO UNITED STATES STANDARDS AND WERE RECORDED IN DECIMAL OF FEET UNLESS OTHERWISE MARKED.
3. NO TITLE SEARCH WAS PERFORMED BY NOR PROVIDED TO THIS FIRM FOR THE SUBJECT PROPERTY. THERE MAY BE DEEDS OF RECORD, UNRECORDED DEEDS, EASEMENTS, RIGHTS-OF-WAY, BUILDING SETBACKS, STATE AND/OR FEDERAL JURISDICTIONAL AREAS RESTRICTIVE COVENANTS OR OTHER INSTRUMENTS THAT COULD AFFECT THE BOUNDARIES OR USE OF THE SUBJECT PROPERTY.
4. THE SURVEY DATUM SHOWN HEREON IS REFERENCED TO THE WARRANTY DEED RECORDED IN OFFICIAL RECORDS BOOK 2532, AT PAGE 413, OF THE PUBLIC RECORDS OF ESCAMBIA COUNTY, FLORIDA; THE CORRECTIVE WARRANTY DEED RECORDED IN OFFICIAL RECORDS BOOK 3614, AT PAGE 585, OF THE PUBLIC RECORDS OF SAID COUNTY; THE WARRANTY DEED RECORDED IN OFFICIAL RECORDS BOOK 6801, AT PAGE 1025, OF THE PUBLIC RECORDS OF SAID COUNTY; THE CORRECTIVE WARRANTY DEED RECORDED IN OFFICIAL RECORDS BOOK 4455, AT PAGE 861, OF THE PUBLIC RECORDS OF SAID COUNTY; OTHER DEEDS OF RECORD; A PREVIOUS SURVEY PREPARED BY HARVEY MICHAEL BOEKE, DATED 3/14/89; THE PLAT OF SOTOGRANDE VILLAS UNIT NO. 3, RECORDED IN PLAT BOOK 17, AT PAGE 14 OF THE PUBLIC RECORDS OF SAID COUNTY; THE PLAT OF THE GANT RECORDED IN PLAT BOOK 11, AT PAGE 35, OF THE PUBLIC RECORDS OF SAID COUNTY; THE PLAT OF 3RD ADDITION TO KENSINGTON RECORDED IN PLAT BOOK 8, AT PAGE 75 OF THE PUBLIC RECORDS OF SAID COUNTY; THE PLAT OF 5TH ADDITION TO KENSINGTON RECORDED IN PLAT BOOK 10, AT PAGE 59 OF THE PUBLIC RECORDS OF SAID COUNTY; OFFICE OF COUNTY APPRAISER, ESCAMBIA COUNTY, FLORIDA, MAP OF SECTION 14, T-1S, R-29-W, DATED 7/24/2015; PREVIOUS SURVEYS BY THIS FIRM; AND TO EXISTING FIELD MONUMENTATION.
5. STATE AND FEDERAL COPYRIGHT ACTS PROTECT THIS MAP FROM UNAUTHORIZED USE. THIS MAP IS NOT TO BE COPIED OR REPRODUCED EITHER IN WHOLE OR IN PART, OR TO BE USED FOR ANY OTHER FINANCIAL TRANSACTION. THIS DRAWING CANNOT BE USED FOR THE BENEFIT OF ANY OTHER PERSON, COMPANY OR FIRM WITHOUT THE PRIOR WRITTEN CONSENT OF THE COPYRIGHT OWNER.
6. IN ACCORDANCE WITH STATE OF FLORIDA ADMINISTRATIVE CODE, ANY ADDITIONS OR DELETIONS TO SURVEY MAPS OR REPORTS BY OTHER THAN THE SIGNING SURVEYOR AND MAPPER ARE PROHIBITED WITHOUT PRIOR WRITTEN CONSENT OF THE SIGNING SURVEYOR AND MAPPER.
7. THE STRUCTURE DIMENSIONS IF ANY DO NOT INCLUDE THE EAVES OR OVERHANG OR THE FOUNDATION FOOTINGS.
8. IT IS THE OPINION OF THE UNDERSIGNED SURVEYOR AND MAPPER THAT THE PROPERTY SHOWN HEREON IS LOCATED IN ZONE "X", BASE FLOOD ELEVATION NOT APPLICABLE, AS DETERMINED BY SCALE FROM FEDERAL EMERGENCY MANAGEMENT AGENCY FLOOD INSURANCE RATE MAP OF ESCAMBIA COUNTY, FLORIDA NUMBERED 12033C0385 G, DATED SEPTEMBER 29, 2006.

SPILL CONTROL NOTES

1. IN ADDITION TO THE GOOD HOUSEKEEPING AND MATERIAL MANAGEMENT PRACTICES DISCUSSED IN THE EROSION CONTROL NOTES OF THIS PLAN, THE FOLLOWING PRACTICES SHALL BE FOLLOWED FOR SPILL PREVENTION AND CLEANUP:
   a. MANUFACTURERS RECOMMENDED METHODS FOR SPILL CLEANUP WILL BE CLEARLY POSTED AND SITE PERSONNEL WILL BE MADE AWARE OF THE PROCEDURES AND THE LOCATION OF THE INFORMATION AND CLEANUP SUPPLIES.
   b. ALL SPILLS WILL BE CLEANED UP IMMEDIATELY AFTER DISCOVERY.
   c. SPILLS OF TOXIC OR HAZARDOUS MATERIAL WILL BE REPORTED TO THE APPROPRIATE STATE OR LOCAL GOVERNMENT AGENCY, REGARDLESS OF SIZE.
   d. THE SPILL PREVENTION PLAN WILL BE ADJUSTED TO INCLUDE MEASURES TO PREVENT THIS TYPE OF SPILL FROM REOCCURRING AND HOW TO CLEAN UP THE SPILL IF THERE IS ANOTHER ONE. A DESCRIPTION OF THE SPILL, WHAT CAUSED IT, AND THE CLEANUP MEASURES WILL ALSO BE INCLUDED.
   e. THE SITE SUPERINTENDENT RESPONSIBLE FOR THE DAY-TO-DAY SITE OPERATIONS WILL BE THE SPILL PREVENTION AND CLEANUP COORDINATOR.

DEMOLITION NOTES

1. CONTRACTOR SHALL OBTAIN NECESSARY PERMITS AND LICENSES FOR PERFORMING THE DEMOLITION WORK AND SHALL FURNISH A COPY OF SAME TO THE ENGINEER PRIOR TO COMMENCING THE WORK. THE CONTRACTOR SHALL COMPLY WITH THE REQUIREMENTS OF THE PERMITS.
2. NO WORK WITHIN THE RIGHT-OF-WAY IS AUTHORIZED UNTIL A RIGHT-OF-WAY PERMIT IS OBTAINED.
3. THE CONTRACTOR SHALL NOTIFY ALL UTILITY COMPANIES OR LOCAL AUTHORITIES FURNISHING GAS, WATER, ELECTRICAL, TELEPHONE, OR SEWER SERVICE SO THEY CAN REMOVE, RELOCATE, DISCONNECT, CAP OR PLUG THEIR EQUIPMENT IN ORDER TO FACILITATE DEMOLITION.
4. CONTRACTOR SHALL PROTECT ALL UTILITIES AND OTHER IMPROVEMENTS SHOWN ON THESE PLANS AND UTILITIES AND OTHER IMPROVEMENTS NOT SHOWN. CONTRACTOR SHALL ASSUME RESPONSIBILITY FOR REPAIRS OF UTILITIES AND OTHER IMPROVEMENTS DAMAGED DURING CONSTRUCTION AND SHALL MAINTAIN SUFFICIENT PROTECTION FOR ALL UTILITIES REQUIRED TO PROTECT THEM FROM DAMAGE AND TO PROTECT THE PUBLIC DURING CONSTRUCTION. CONTRACTOR SHALL ALSO SUPPORT EXISTING UTILITIES AS REQUIRED FOR INSTALLATION OF ALL PROPOSED IMPROVEMENTS. ALL COSTS ASSOCIATED WITH PROTECTING, SUPPORTING, REPAIRING, AND OTHER ACTIVITIES RESULTING FROM CONTRACTOR DAMAGING UTILITIES SHALL BE THE CONTRACTOR'S RESPONSIBILITY AT NO ADDITIONAL COST TO THE OWNER OR LOCAL UTILITY.
5. CONTRACTOR IS RESPONSIBLE FOR THE PROTECTION OF ALL TREES, STRUCTURES, AND UTILITIES NOT MARKED FOR REMOVAL OR DEMOLITION AND SHALL PROMPTLY REPAIR ANY DAMAGE AS DIRECTED BY THE ENGINEER AT NO COST TO THE OWNER. TREES NOT MARKED FOR REMOVAL SHALL BE PROTECTED.
6. CONTRACTOR SHALL CLEAR AND GRUB THE SITE AS NECESSARY TO CONSTRUCT PROPOSED IMPROVEMENTS. REMOVE TREES MARKED FOR REMOVAL WHICH INCLUDES THE ROOTS ASSOCIATED WITH THE TREE.
7. ALL UNSUITABLE MATERIALS, INCLUDING ORGANICS AND MUCK, MUST BE EXCAVATED AND REMOVED FROM THE SITE AND REPLACED WITH CLEAN SAND PRIOR TO GRADING THE SITE.
8. CONTRACTOR SHALL TAKE PROPER MEASURES TO ENSURE EXCAVATED OR UNSALVAGEABLE MATERIAL STORED ON-SITE ARE PROTECTED AGAINST EROSION AND SEDIMENTATION. CONTRACTOR SHALL REMOVE UNSALVAGEABLE MATERIALS AND YARD WASTE FROM THE SITE IN A TIMELY MANNER AND DISPOSE OF IN ACCORDANCE WITH APPLICABLE FEDERAL, STATE, AND LOCAL REGULATIONS.
9. CONTRACTOR SHALL REMOVE BUILDING STRUCTURES MARKED FOR DEMOLITION WHICH INCLUDES FOOTERS ASSOCIATED WITH THE STRUCTURE, WATER LINES TO THE METER LOCATION, LATERALS TO THE RIGHT-OF-WAY LINE (CAP PRIOR TO BACKFILLING THE TRENCH), AND UNDERGROUND ELECTRICAL WIRING NOT ASSOCIATED WITH THE APPROPRIATE POWER COMPANY.
10. UNLESS OTHERWISE NOTED, ALL DEMOLISHED MATERIALS (PAVING, CURB, UTILITY PIPE, ETC.) SHALL BE REMOVED AND DISPOSED OF OFF SITE. NOTHING IDENTIFIED FOR DEMOLITION SHALL BE ABANDONED IN PLACE.
11. CONTRACTOR SHALL SAW-CUT A SMOOTH STRAIGHT EDGE ON ANY PAVEMENT PROPOSED FOR DEMOLITION PRIOR TO ITS REMOVAL. PRIOR TO CONNECTING PROPOSED PAVEMENT TO EXISTING PAVEMENT, THE CONTRACTOR SHALL ENSURE THAT THE EDGE OF THE EXISTING PAVEMENT IS STRAIGHT AND UNIFORM.
12. CONTRACTOR SHALL REMOVE PAVING MARKED FOR DEMOLITION WHICH INCLUDES ALL ASPHALT, CONCRETE, BASE, AND RETAINING WALLS (INCLUDING THE FOOTERS).
13. FULL DEPTH PAVEMENT SECTION REMOVAL INCLUDES ANY ASSOCIATED ASPHALT OR CONCRETE PAVEMENT, BASE MATERIAL, AND COMPACTED SUBGRADE TO A DEPTH TO REACH OF NATURAL SOIL.

ESCAMBIA COUNTY NOTES

1. THE PROJECT ENGINEER (ENGINEER OF RECORD) SHALL PROVIDE TO ESCAMBIA COUNTY "AS-BUILT" RECORD DRAWINGS FOR VERIFICATION AND APPROVAL BY ESCAMBIA COUNTY ONE WEEK PRIOR TO REQUESTING A FINAL INSPECTION AND CERTIFICATE OF OCCUPANCY, OR PROVIDE "AS-BUILT" CERTIFICATION THAT THE PROJECT CONSTRUCTION ADHERES TO THE PERMITTED PLANS AND SPECIFICATIONS. THE "AS-BUILT" CERTIFICATION OR THE "AS-BUILT" RECORD DRAWINGS MUST BE SIGNED, SEALED AND DATED BY A REGISTERED FLORIDA PROFESSIONAL ENGINEER.
2. ALL ASPECTS OF THE STORMWATER/DRAINAGE COMPONENTS AND/OR TRANSPORTATION COMPONENTS SHALL BE COMPLETED PRIOR TO ISSUANCE OF A FINAL CERTIFICATE OF OCCUPANCY.
3. NO DEVIATIONS OR REVISIONS FROM THESE PLANS BY THE CONTRACTOR SHALL BE ALLOWED WITHOUT PRIOR APPROVAL FROM BOTH THE DESIGN ENGINEER AND THE ESCAMBIA COUNTY. ANY DEVIATIONS MAY RESULT IN DELAYS IN OBTAINING A CERTIFICATE OF OCCUPANCY.
4. THE CONTRACTOR SHALL INSTALL PRIOR TO THE START OF CONSTRUCTION AND MAINTAIN DURING CONSTRUCTION ALL SEDIMENT CONTROL MEASURES AS REQUIRED TO RETAIN ALL SEDIMENTS ON THE SITE. IMPROPER SEDIMENT CONTROL MEASURES MAY RESULT IN CODE ENFORCEMENT VIOLATION.
5. DEVELOPER/CONTRACTOR SHALL RESHAPE PER PLAN SPECIFICATIONS, CLEAN OUT ACCUMULATED SILT, AND STABILIZE RETENTION/DETENTION POND(S) AT THE END OF CONSTRUCTION WHEN ALL DISTURBED AREAS HAVE BEEN STABILIZED AND PRIOR TO REQUEST FOR INSPECTION.
6. CONTRACTOR SHALL MAINTAIN RECORD DRAWINGS DURING CONSTRUCTION WHICH SHOW "AS-BUILT" CONDITIONS OF ALL WORK INCLUDING PIPING, DRAINAGE STRUCTURES, TOPO OF POND(S), OUTLET STRUCTURES, DIMENSIONS, ELEVATIONS, GRADING ETC. RECORD DRAWINGS SHALL BE PROVIDED TO THE ENGINEER OF RECORD PRIOR TO REQUESTING FINAL INSPECTION.
7. THE OWNER OR HIS AGENT SHALL ARRANGE/SCHEDULE WITH THE COUNTY A FINAL INSPECTION OF THE DEVELOPMENT UPON COMPLETION AND ANY INTERMEDIATE INSPECTIONS AT (850) 595-3472. AS-BUILT CERTIFICATION IS REQUIRED PRIOR TO REQUEST FOR FINAL INSPECTION/APPROVAL.
8. NOTIFY SUNSHINE UTILITIES 48 HOURS IN ADVANCE PRIOR TO DIGGING WITHIN R/W; 1-800-432-4770.
9. ANY DAMAGE TO EXISTING ROADS DURING CONSTRUCTION WILL BE REPAIRED BY THE DEVELOPER PRIOR TO FINAL "AS-BUILT" SIGN OFF FROM THE COUNTY.
10. THE CONTRACTOR SHALL NOTIFY FDOT 48 HOURS IN ADVANCE PRIOR TO INITIATING ANY WORK IN THE STATE RIGHTS-OF-WAY OR EASEMENT.
11. "THE SUBJECT PROPERTY AS SHOWN HEREON IS LOCATED IN FLOOD ZONE X, (MINIMAL RISK AREAS OUTSIDE THE 1-PERCENT AND .2-PERCENT-ANNUAL-CHANCE FLOODPLAINS. NO BFES OR BASE FLOOD DEPTHS ARE SHOWN WITHIN THESE ZONES), AS DETERMINED FROM THE FEDERAL EMERGENCY MANAGEMENT AGENCY FLOOD INSURANCE RATE MAP OF ESCAMBIA COUNTY, FLORIDA, COMMUNITY 120080, FIRM MAP PANEL NUMBERS 12033C0385G, MAP REVISION DATED SEPTEMBER 29, 2006."

PAVING, GRADING, AND DRAINAGE NOTES

1. CONTRACTOR SHALL FIELD VERIFY THE EXISTING CONDITIONS ALONG THE ALIGNMENT OF ALL PROPOSED SIDEWALKS AND NOTIFY THE OWNER OF ALL DISCREPANCIES. CONTRACTOR SHALL ALSO HAVE VERTICAL AND HORIZONTAL CONTROL POINTS FIELD MARKED BY HIS SURVEY CREW AND SHALL HAVE THE MARKERS REVIEWED AND APPROVED BY THE OWNER'S REPRESENTATIVE PRIOR TO THE COMMENCEMENT OF CONSTRUCTION.
2. EXISTING GRADES SHOWN ON THE DRAWINGS (IN PLACE OR IN SECTION) ARE APPROXIMATE ONLY. CONTRACTOR IS RESPONSIBLE FOR GRADING, INCLUDING PLACEMENT OR REMOVAL OF FILL MATERIAL AS APPROPRIATE, TO PROVIDE PROPER RELATIONSHIP BETWEEN WALKS/RAMPS AND ADJACENT ROADWAYS, CURBS, LOTS, UTILITIES, AND OTHER APPURTENANCES, AS INDICATED.
3. SAWCUT EXISTING PAVEMENT AT THE CONNECTIONS TO THE EXISTING ROADWAYS TO FORM A SMOOTH TRANSITION.
4. HORIZONTAL GEOMETRY REFERS TO ROADWAY OR PARKING LOT EDGE OF PAVEMENT.
5. ALL CURBS (EXISTING OR NEW) SHALL BE PROTECTED FROM CONSTRUCTION DAMAGE. ALL CHIPPED OR CRACKED PORTIONS OF CURB SHALL BE REPLACED AT CONTRACTOR'S EXPENSE. IN ADDITION, ANY MORTAR, CONCRETE, SOIL AND OTHER DEPOSITS OR STAINS SHALL BE CLEANED TO RETURN THE CURBS TO THEIR ORIGINAL CONDITION.
6. TOOL AND CLEAN ALL MANHOLE AND VALVE COVERS OF DIRT, DEBRIS AND ASPHALT. ALL MANHOLE AND VALVE COVERS SHALL BE CLEAN AND OPERABLE PRIOR TO OWNER'S ACCEPTANCE.
7. IN ADDITION TO THE REQUIREMENTS IN THE ENGINEER'S TECHNICAL SPECIFICATIONS, ALL ROADWAY CONSTRUCTION SHALL BE COMPLETED IN ACCORDANCE WITH APPLICABLE STATE OR LOCAL GOVERNMENT SPECIFICATIONS.
8. CONTRACTOR TO PROVIDE MAINTENANCE OF TRAFFIC (MOT) PLAN FOR REVIEW AND APPROVAL TO THE APPLICABLE STATE OR LOCAL GOVERNMENT PRIOR TO WORK IN THE RIGHT-OF-WAY. CONTRACTOR SHALL EXECUTE AND IMPLEMENT THE MOT PLAN IN ACCORDANCE WITH FDOT STANDARDS.
9. STABILIZED SUBGRADE TO BE F.D.O.T. TYPE "B".
10. ALL CONCRETE STRUCTURES, SUCH AS, BUT NOT LIMITED TO: FLUMES, WALKS, CURBS AND DRAINAGE STRUCTURES, SHALL BE TO FDOT STANDARD SPECIFICATIONS (LATEST EDITION).
11. NON-STRUCTURAL CONCRETE SHALL BE MINIMUM COMPRESSIVE STRENGTH 3,000 PSI AT 28 DAY COMPRESSIVE STRENGTH. ALL STRUCTURAL CONCRETE SHALL BE A MINIMUM OF 4,000 PSI AT 28 DAY COMPRESSIVE STRENGTH.
12. COMPLETE CONSTRUCTION WITHOUT IMPACTING THE NORMAL OPERATION OF PEDESTRIAN AND VEHICULAR TRAFFIC.
13. LEADING EDGE OF RAMP SHALL ALIGN WITH SIDEWALK OR RAMP ON OPPOSITE SIDE OF INTERSECTION.
14. WHERE A CURB CUT RAMP IS CONSTRUCTED WITHIN AN EXISTING CURB, CURB AND GUTTER AND/OR SIDEWALK, THE EXISTING CURB OR CURB AND GUTTER SHALL BE REMOVED TO THE NEAREST JOINT BEYOND THE DROP CURB OR TO THE EXTENT THAT NO REMAINING SECTION OF CURB OR CURB AND GUTTER IS LESS THAN 5' LONG. THE EXISTING SIDEWALK SHALL BE REMOVED TO THE NEAREST JOINT BEYOND THE TRANSITION SLOPE OR TO THE EXTENT THAT NO REMAINING SECTION OF SIDEWALK IS LESS THAN 5' LONG.
15. THE EXISTING GRADES SHOWN ON THE DRAWINGS (IN PLAN OR IN SECTION) ARE APPROXIMATE ONLY. THE CONTRACTOR IS RESPONSIBLE FOR GRADING, INCLUDING PLACEMENT OR REMOVAL OF FILL MATERIAL AS APPROPRIATE, TO PROVIDE PROPER RELATIONSHIP BETWEEN WALKS/RAMPS AND ADJACENT ROADWAYS, CURBS, LOTS, UTILITIES, AND OTHER APPURTENANCES, AS INDICATED.
16. SIDEWALK/RAMP CONSTRUCTION AND EXISTING CURB REMOVAL NECESSARY TO CONSTRUCT THE HANDICAP RAMPS (IF APPLICABLE) ARE INCLUDED IN THIS CONTRACT.
17. CONTRACTOR SHALL COORDINATE WITH APPROPRIATE UTILITY PROVIDER FOR THE ADJUSTMENT OF ANY EXISTING OR PROPOSED UTILITY BOXES OR COVERS WITHIN SIDEWALK CONSTRUCTION LIMITS SHOWN ON THE DRAWINGS.
18. CONTRACTOR SHALL MAINTAIN CLEAR, SAFE WALKWAYS AND WALKING DETOURS FOR NORMAL PEDESTRIAN AND GUEST TRAFFIC AT ALL TIMES DURING CONSTRUCTION. CONTRACTOR IS RESPONSIBLE FOR PEDESTRIAN AND GUEST MOT PLANS.
19. CONTRACTOR SHALL PROVIDE POSITIVE DRAINAGE AWAY FROM ALL BUILDINGS.
20. PROPOSED SPOT ELEVATIONS REPRESENT FINISHED PAVEMENT OR GROUND SURFACE GRADE UNLESS OTHERWISE NOTED IN DRAWINGS. IF CURBING IS REQUIRED, SPOT ELEVATIONS WILL BE SHOWN AT THE EDGE OF ALL PAVEMENT.
21. IT MAY BE NECESSARY TO FIELD ADJUST PAVEMENT ELEVATIONS TO PRESERVE THE ROOT SYSTEM OF TREES SHOWN TO BE SAVED. CONTRACTOR TO COORDINATE WITH ENGINEER PRIOR TO ANY ELEVATION CHANGES.
22. ANY FILL TO BE USED AS BACKFILL, SHALL BE CLEAN, GRANULAR MATERIAL. PRIOR TO THE USE OF ANY GRANULAR FILL, GRADATION ANALYSIS SHALL BE PREFORMED ON REPRESENTATIVE SAMPLES OF THE FILL MATERIAL TO DETERMINE WHETHER THE MATERIAL IS SUITABLE AS FILL. COMPACTED FILL SHALL BE PLACED IN LAYERS OF NOT MORE THAN 8-INCHES IN THICKNESS, AT MOISTURE CONTENTS WITHIN 3-PERCENT OF OPTIMUM, AND COMPACTED TO MINIMUM DENSITY OF 95% OF THE MAXIMUM DRY DENSITY OR AS REQUIRED BY CONTOUR ENGINEERING AS DETERMINED BY THE MODIFIED PROCTOR METHOD, ASTM D-1557.
23. ON-SITE STORMWATER MANAGEMENT AND DRAINAGE SYSTEM WILL BE PRIVATELY OWNED AND MAINTAINED.
29. ALL PIPES SHALL HAVE 3-FEET MINIMUM COVER UNLESS OTHERWISE SPECIFIED IN PLANS, CONTRACTOR SHALL TAKE CARE TO PROVIDE PROPER GRADE ELEVATIONS AND ALIGNMENTS.
30. ALL STORM DRAINAGE INLETS AND PIPES SHALL BE PROTECTED FROM SILT, SAND AND DEBRIS DURING CONSTRUCTION. ANY ACCUMULATION WITHIN THE STORM DRAINAGE PIPE SYSTEM SHALL BE REMOVED WITHOUT PUMPING OR FLUSHING INTO THE PONDS. STORM DRAINAGE SYSTEM SHALL BE CLEANED AND FREE OF DEBRIS PRIOR TO CONSTRUCTION MANAGER'S ACCEPTANCE.
31. PROVIDE SOCK DRAIN OR SEDIMENT FILTER IN FRONT OF ALL DRAINAGE CURB INLETS AND PROVIDE FILTER FABRIC UNDER THE GRATE OF ALL DITCH BOTTOM INLETS AFTER INITIAL COMPLETION OF THE DRAINAGE STRUCTURES. MAINTAIN THESE MEASURES DAILY (WHICH MAY INCLUDE FULL REPLACEMENT AT THE DISCRETION OF THE CONSTRUCTION MANAGER) TO MINIMIZE SILT ACCUMULATION IN THE STORM DRAINAGE SYSTEM.
32. TOP ELEVATION OF ALL CURB INLETS ARE SHOWN WHERE THE EDGE OF PAVEMENT ELEVATION MEETS THE THROAT APRON OF THE CURB INLET.
36. ALL DRAINAGE PIPE JOINTS TO BE WRAPPED WITH FILTER FABRIC CLOTH PER FDOT PLAN 430-001.
37. CONTRACTOR TO PROTECT MANHOLE COVERS FROM DAMAGE THROUGHOUT PROJECT CONSTRUCTION.
38. RETENTION/DETENTION AREAS SHALL BE SUBSTANTIALLY COMPLETE PRIOR TO ANY CONSTRUCTION ACTIVITIES THAT MAY INCREASE STORMWATER RUNOFF RATES. THE CONTRACTOR SHALL CONTROL STORMWATER DURING ALL PHASES OF CONSTRUCTION AND TAKE ADEQUATE MEASURES TO PREVENT THE EXCAVATED POND FROM BLINDING DUE TO SEDIMENTS.
39. ALL DISTURBED AREAS WHICH ARE NOT PAVED SHALL BE STABILIZED WITH SEEDING, FERTILIZER AND MULCH, HYDROSEED AND/OR SOD.
40. ALL NEW BUILDING ROOF DRAINS, DOWN SPOUTS, OR GUTTERS SHALL BE ROUTED TO CARRY ALL STORMWATER TO RETENTION/DETENTION AREAS.

EARTHWORK, GRADING, AND STABILIZATION NOTES

1. INFORMATION CONCERNING SITE SOIL CONDITIONS WILL BE PROVIDED BY THE GEOTECH REPORT.
2. COMPACT ALL UTILITY TRENCHES WITHIN ROADWAYS TO 98% OF THE MODIFIED PROCTOR MAXIMUM DENSITY (AASHTO T - 180) AND TO 95% WITHIN OTHER AREAS.
3. ALL EARTHWORK FOR ALL BUILDING FOUNDATIONS AND SLABS SHALL BE IN ACCORDANCE WITH ARCHITECTURAL PLANS AND SPECIFICATIONS.
4. ALL ON-SITE AREAS DISTURBED BY THE CONSTRUCTION SHALL BE STABILIZED IN ACCORDANCE WITH LANDSCAPE PLANS OR WITH SOD (SAME AS SURROUNDING AREA OR BETTER) OR APPROVED EQUAL.
5. ALL DEWATERING COSTS ASSOCIATED WITH THE PERMITTING, INSTALLATION, MAINTENANCE, AND CONSTRUCTION OF THE UNDERGROUND UTILITIES; STORM WATER PIPES AND MANHOLES; SANITARY SEWER MAINS, FORCE MAINS, MANHOLES, AND LIFT STATIONS; AND STORM WATER MANAGEMENT SYSTEMS SHALL BE INCLUDED AS PART OF THE CONSTRUCTION BID COSTS. THE CONTRACTOR SHALL SUBMIT FOR WATER USE PERMITS IF REQUIRED FOR DEWATERING ACTIVITIES.
6. PLANS AND SPECIFICATIONS REQUIRE THAT COMPACTED BACKFILL BE PLACED ALONG SIDE OF AND OVER ALL UTILITIES. ENGINEER MAY REQUIRE THAT COMPACTION TESTS BE TAKEN TO VERIFY BACKFILL COMPACTION. COST OF SUCH COMPACTION TESTS WILL BE BORNE BY THE CONTRACTOR.
7. UNLESS SHOWN OTHERWISE ON THE PLANS, CONTRACTOR SHALL APPLY 4" OF TOP SOIL TO ALL DISTURBED AREAS OF THE SITE, PLANT GLASS SEED OR SOD, APPLY STRAW, AND WATER. IT IS THE RESPONSIBILITY OF THE CONTRACTOR TO ESTABLISH A HEALTHY STAND OF GRASS ON ALL SEEDED OR SODDED AREAS. IF A HEALTHY STAND OF GRASS CAN NOT BE ESTABLISHED BY THE TIME THE BUILDING BECOMES OCCUPIED, THEN SOD SHALL BE INSTALLED AND WATERED UNTIL GRASS IS ESTABLISHED.
8. THE CONTRACTOR MUST INSTALL AND MAINTAIN GRASS OR SOD ON EXPOSED SLOPES WITHIN 48 HOURS OF COMPLETED FINAL GRADES, AS NOTED ON PLANS, AND AT ANY OTHER TIME AS NECESSARY TO PREVENT EROSION, SEDIMENTATION OR TURBID DISCHARGES TO ANY DOWNSTREAM WATER BODY, WETLAND, OR OFF-SITE PROPERTY. SODDING ON SLOPES 3:1 AND STEEPER SHALL BE STAKED.
9. CONTRACTOR SHALL TAKE ALL MEASURES NECESSARY TO CONTROL TURBIDITY AND SEDIMENT INCLUDING, BUT NOT LIMITED TO, THE INSTALLATION OF TURBIDITY BARRIERS AND SILT FENCES AT ALL LOCATIONS WHERE THE POSSIBILITY OF TRANSFERRING SUSPENDED SOLIDS INTO THE RECEIVING WATER BODY EXISTS DUE TO THE PROPOSED WORK. TURBIDITY AND SEDIMENT BARRIERS MUST BE INSTALLED PRIOR TO THE COMMENCEMENT OF CONSTRUCTION AND MAINTAINED AT ALL LOCATIONS UNTIL CONSTRUCTION IS COMPLETED AND DISTURBED SOIL AREAS ARE STABILIZED. THE CONTRACTOR SHALL ALSO BE RESPONSIBLE FOR REMOVING THE BARRIERS.

LEGEND:

R/W – RIGHT OF WAY
D1 – DESCRIPTION MEASUREMENT (PARCEL #1)
D2 – DESCRIPTION MEASUREMENT (PARCEL #2)
D2a – DESCRIPTION MEASUREMENT (LESS & EXCEPT
D2b FROM PARCEL #2)
D3 – DESCRIPTION MEASUREMENT (PARCEL #2 "BEING
D4 MORE PARTICULARLY DESCRIBED AS" PARCEL)
D5 – DESCRIPTION MEASUREMENT (PARCEL #3)
D7 – DESCRIPTION MEASUREMENT (PARCEL #4)
D7a – DESCRIPTION MEASUREMENT (PARCEL #5)
D8 – DESCRIPTION MEASUREMENT (PARCEL #7)
D9 – DESCRIPTION MEASUREMENT (NON-EXCLUSIVE
D10 EASEMENT BENEFITING PARCEL #7)
D10a – DESCRIPTION MEASUREMENT (PARCEL #8)
D11 – DESCRIPTION MEASUREMENT (LESS & EXCEPT
P PARCEL)
F – DESCRIPTION MEASUREMENT (FIRST "AND ALSO"
LS PARCEL)
LB – DESCRIPTION MEASUREMENT (DRAINAGE EASEMENT
F.F.E. BENEFITING FIRST "AND ALSO" PARCEL)
ELEV. – DESCRIPTION MEASUREMENT ("AND ALSO" PARCEL)
⊕ – PLAT MEASUREMENT
◕ – FIELD MEASUREMENT
● – LICENSED SURVEYOR
◒ – LICENSED BUSINESS
⊖ – FINISHED FLOOR ELEVATION
◉ – ELEVATION
◎ – 1/2" CAPPED METAL ROD LS #5791 (SET)
Ⓗ – NAIL & DISC LS #5791 (SET)
Ⓙ – 1" METAL PIPE, NO IDENTIFICATION (FOUND)
Ⓛ – 1/2" METAL ROD, NO IDENTIFICATION (FOUND)
Ⓚ – 5/8" METAL ROD, NO IDENTIFICATION (FOUND)
○ – NAIL & DISC, NO IDENTIFICATION (FOUND)
■ – 60d NAIL, NO IDENTIFICATION (FOUND)
▣ – 1/2" CAPPED METAL ROD LS #4284 (FOUND)
□ – 1/2" CAPPED METAL ROD LS #4082 (FOUND)
– 1/2" CAPPED METAL ROD LS #4747 (FOUND)
– 1/2" CAPPED METAL ROD LB #7107 (FOUND)
– 1/2" CAPPED METAL ROD # ILLEGIBLE (FOUND)
– 4" x 4" CONCRETE MONUMENT LS #1872 (FOUND)
– 4" x 4" CONCRETE MONUMENT LS #1748 (FOUND)
– 4" x 4" CONCRETE MONUMENT, NO IDENTIFICATION (FOUND)

SITE DATA SUMMARY

PROP. REF. NO.: 14-1S-29-1102-000-005; 14-1S-29-1102-002-006; 14-1S-29-1150-090-002; 14-1S-29-1150-100-002

PROJECT AREA: ±3.33 ACRES

STREET ADDRESS: 3001 LANGLEY AVENUE, PENSACOLA, FLORIDA 32504

CURRENT USE: COMMERCIAL
ZONING: HDMU
FUTURE LAND USE: MU-U

PROPOSED BUILDING USE: MULTI-FAMILY RESIDENTIAL

PROPOSED BUILDING NET FLOOR AREA: ±34,500 SF

BUILDING SETBACKS
FRONT: 20'
REAR: 15'
SIDE: 10'
SIDE (RESIDENTIAL): 20'

LANDSCAPING BUFFER
FRONTAGE: 5'
SIDE: 10'

PARKING
REQUIRED TOTAL: ONE (1.5) PARKING SPACE PER DWELLING UNIT; 76 UNITS * 1.5 = 114 STALLS
PROPOSED: 125 STANDARD STALLS / 7 ADA STALLS

CONTRIBUTING AREA: 162,611 SF (±3.01 AC) (100%)
PERVIOUS: 45,049 SF (±0.67 AC) (22.26%)
IMPERVIOUS: 117,562 SF (±2.34 AC) (77.74%)

FLOOD ZONE: THE PARCELS SHOWN IS LOCATED WITHIN THE FOLLOWING FLOOD ZONE(S) AS DETAILED BY FEMA FORM (FLOOD INSURANCE RATE MAP) INFORMATION DESCRIBED BELOW:

FLOOD ZONE (S)	NFIP COMMUNITY NUMBER*	MAP NUMBER*	PANEL NUMBER(S)	MAP SUFFIX*	MAP REVISION DATE*
X	120274	12113C	0385	G	SEPTEMBER 19, 2006

REV.NO.	DESCRIPTION	DATE

REVISIONS

D. PATRICK JEHLE JR. No. 71528 STATE OF FLORIDA PROFESSIONAL ENGINEER

McKIM&CREED
1206 N. Palafox Street
Pensacola, Florida 32501
Phone: (850) 994-9503
CA Lic. No. 29588
www.mckimcreed.com

AERO SPACES HOUSING MULTI-FAMILY

GENERAL

GENERAL NOTES, LEGENDS & ABBREVIATIONS

PROJ. START DATE:	10/7/2021
MCE PROJ. #	08195-0001
DRAWN	CPH
DESIGNED	ALM/DPJj
CHECKED	DPJj
PROJ. MGR.	DPJj

SCALE
HORIZONTAL: AS SHOWN
VERTICAL: N/A

G-001
DRAWING NUMBER
REVISION

STATUS: ISSUED FOR PERMIT NOT FOR CONSTRUCTION

I:\08195\0001\ENG\80-DRAWINGS\CIVIL\SOUTH SITE\G-001 GENERAL NOTES, LEGENDS & ABBREVIATIONS.DWG 11/19/2021 13:58:01 ALEX MAINIERO

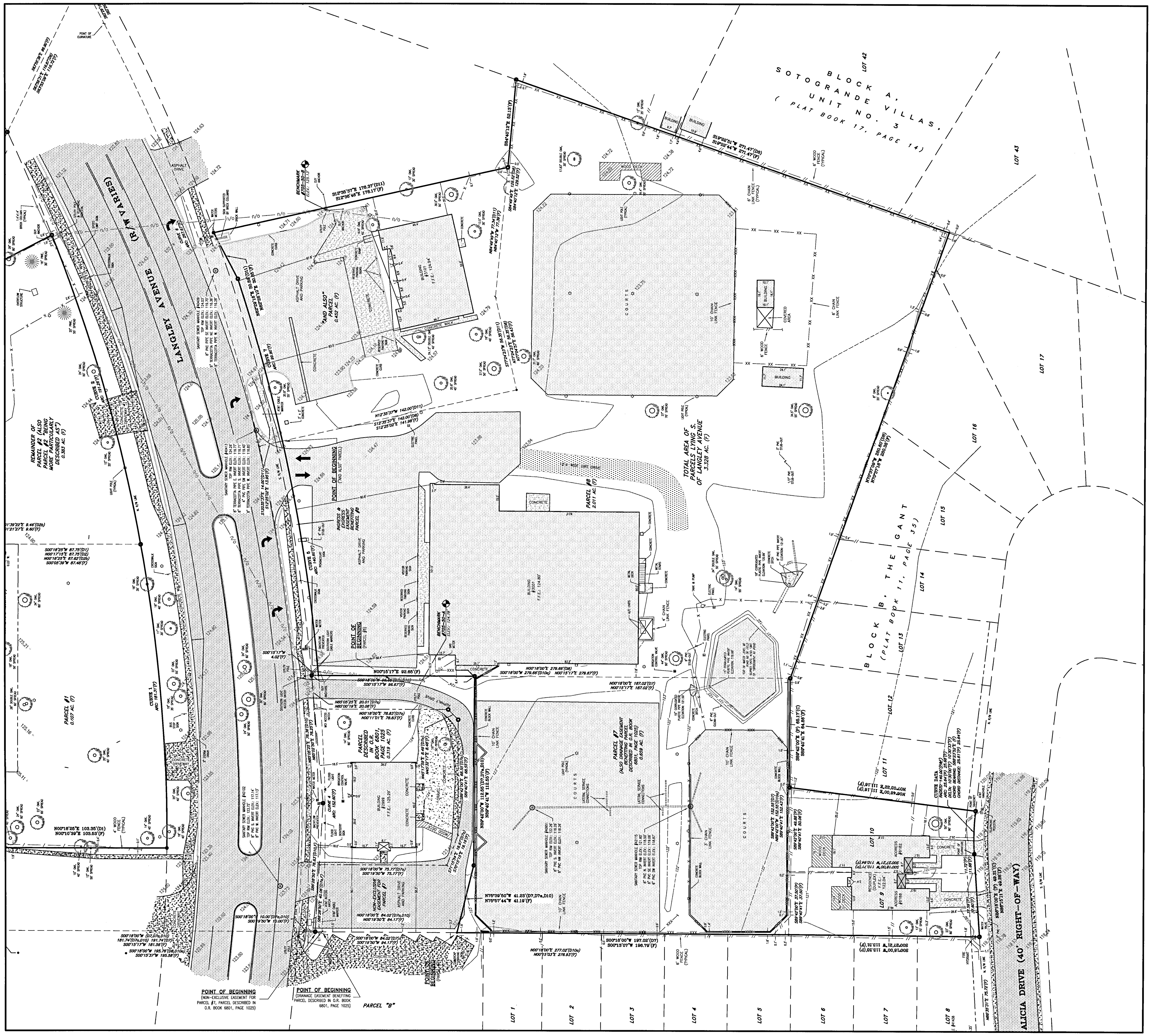

BENCHMARKS:

BENCHMARK #705-50-A
TOP OF COTTON GIN SPINDLE & DISC LS #5791 SET IN THE NORTHERLY FACE OF A UTILITY POLE LYING APPROXIMATELY 15 FEET NORTHWEST OF THE NORTHWEST CORNER OF BUILDING AT ADDRESS #3001 LANGLEY AVENUE.
ELEVATION: 124.78 FEET

BENCHMARK #705-50-B
TOP OF COTTON GIN SPINDLE & DISC LS #5791 SET IN THE WESTERLY FACE OF A UTILITY POLE LYING APPROXIMATELY 33 FEET NORTH OF THE NORTHEAST CORNER OF BUILDING AT ADDRESS #3101 LANGLEY AVENUE.
ELEVATION: 125.13 FEET

30' 0 30' 60'
SCALE: 1"=30' (Horiz.)

REV.NO.	DESCRIPTION	DATE

REVISIONS

D. PATRICK JEHLE, JR. No. 71520 STATE OF FLORIDA PROFESSIONAL ENGINEER

McKIM&CREED
1206 N. Palafox Street
Pensacola, Florida 32501
Phone: (850) 994-9503

CA Lic. No. 29588
www.mckimcreed.com

AERO SPACES HOUSING MULTI-FAMILY

CIVIL - SOUTH SITE

EXISTING CONDITIONS PLAN

PROJ. START DATE:	10/7/2021
MCE PROJ. #	08195-0001
DRAWN	CPH
DESIGNED	ALM/DPJj
CHECKED	DPJj
PROJ. MGR.	DPJj

SCALE
HORIZONTAL: AS SHOWN
VERTICAL: N/A

C-100
DRAWING NUMBER
-
REVISION

STATUS: **ISSUED FOR PERMIT NOT FOR CONSTRUCTION**

\\MCKIMCREED.COM\NASUNI\DATA\PROJ\08195\0001\ENG\80-DRAWINGS\CIVIL\SOUTH SITE\C-100 EXISTING CONDITIONS.DWG 11/19/2021 12:30:05 ALEX MAINIERO

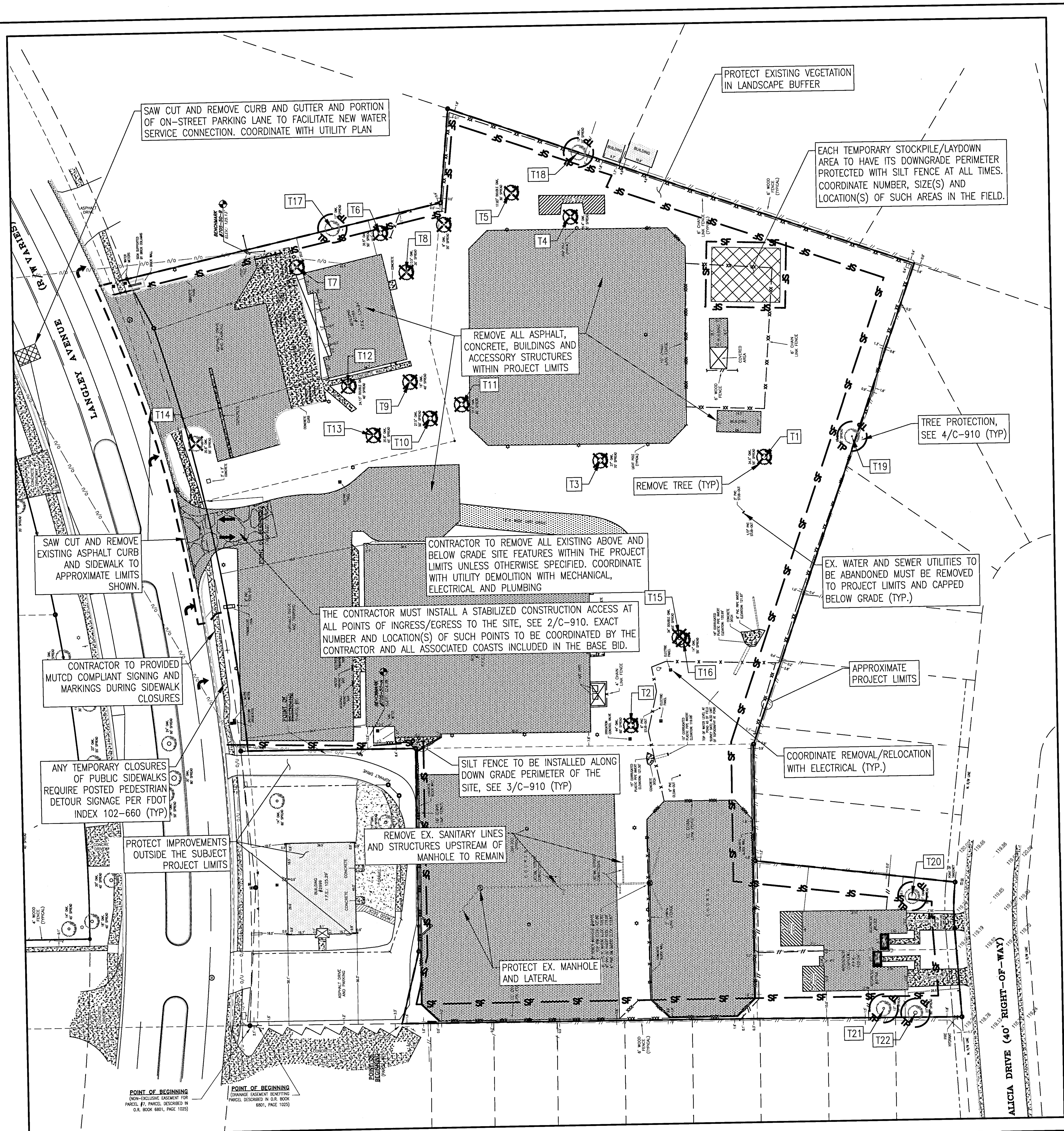

TREE SCHEDULE					
TREE #	JURISDICTION	SPECIES	CANOPY	DIAMETER	STATUS
T1	COUNTY	OAK	55'	34.5"	REMOVE
T2	COUNTY	OAK	60'	44"	REMOVE
T3	COUNTY	OAK	70'	37"	REMOVE
T4	COUNTY	OAK	50'	26.4"	REMOVE
T5	COUNTY	OAK	30'	17.83"	REMOVE
T6	COUNTY	OAK	50'	36.5"	REMOVE
T7	COUNTY	OAK	40'	19.6"	REMOVE
T8	COUNTY	OAK	30'	13.5"	REMOVE
T9	COUNTY	OAK	40'	16"	REMOVE
T10	COUNTY	OAK	50'	27.5"	REMOVE
T11	COUNTY	OAK	60'	31.7"	REMOVE
T12	COUNTY	OAK	40'	24.13"	REMOVE
T13	COUNTY	OAK	45'	20.8"	REMOVE
T14	COUNTY	OAK	55'	20.8"	REMOVE
T15	COUNTY	OAK	55'	34"	REMOVE
T16	COUNTY	OAK	55'	14"	REMOVE
T17	COUNTY	OAK	30'	12"	PROTECT
T18	COUNTY	OAK	35'	12"	PROTECT
T19	COUNTY	OAK	20'	8"	PROTECT
T20	COUNTY	OAK	90'	50"	PROTECT
T21	COUNTY	OAK	70'	13"	PROTECT
T22	COUNTY	OAK	80'	23"	PROTECT

*SEE C-500 FOR TREE REMOVAL AND MITIGATION REQS

DEMOLITION NOTES

1. THE SUBJECT PARCEL FALLS WITHIN THE TRAVEL TIME CONTOUR OF A PROTECTED (POTABLE) WELLHEAD. CONTRACTORS SHALL BE RESPONSIBLE FOR REPORTING SPILLS OF POTENTIALLY HAZARDOUS SUBSTANCES (I.E. GASOLINE, DIESEL FUEL, HYDRAULIC FLUID, CLEANING PRODUCTS, CHEMICALS, ETC.) TO THE APPROPRIATE STATE (FDEP STATE WARNING POINT 1-800-320-0519) AND LOCAL (ECUA- EMERALD COAST UTILITIES AUTHORITY (850) 476-5110 AND ESCAMBIA COUNTY HEALTH DEPARTMENT/ENVIRONMENTAL HEALTH 595-6712) AGENCIES.
2. ALL ADEQUATE TREE PROTECTION MEASURES AND BARRICADES SHALL BE INSTALLED PRIOR TO SITE DISTURBANCE AND MAINTAINED IN GOOD WORKING ORDER UNTIL PROJECT IS COMPLETE AND SITE BECOMES STABILIZED.

MAINTENANCE OF TRAFFIC NOTES

1. ALL TEMPORARY TRAFFIC CONTROL MEASURES – BOTH VEHIULCAR AND PEDESTRIAN – MUST BE IN ACCORDANCE WITH THE FDOT SERIES 102-602 STANDARDS PLAN INDEXES, MUTCD PART 6 REGARDING TEMPORARY TRAFFIC CONTROL , AND ESCAMBIA COUNTY STANDARDS.
2. FOR WORK WITHIN THE COUNTY'S LANGLEY AVENUE RIGHT-OF-WAY, CONTRACTOR MUST PREPARE A MAINTENANCE OF TRAFFIC SKETCH/PLAN AND PROVIDE TO ESCAMBIA COUNTY TRAFFIC OPERATIONS (JASON WALTERS, 850.595.3422, JJWALTER@MYESCAMBIA.COM) FOR APPROVAL PRIOR TO IMPLEMENTATION OF THE PROPOSED MEASURES. PLAN MUST INDICATE SCHEDULED START AND FINISH DATE FOR WORK.
3. THE EXISTING REGULATORY POSTED SPEED SHALL REMAIN 30 MPH ALONG LANGLEY AVENUE.

SCALE: 1"=30' (Horiz.)

REV.NO.	DESCRIPTION	DATE
REVISIONS		

D. PATRICK JEHLE, JR. No. 71526 STATE OF FLORIDA PROFESSIONAL ENGINEER

McKIM&CREED
1206 N. Palafox Street
Pensacola, Florida 32501
Phone: (850) 994-9503
CA Lic. No. 29588
www.mckimcreed.com

AERO SPACES HOUSING MULTI-FAMILY

CIVIL - SOUTH SITE

DEMOLITION PLAN

PROJ. START DATE:	10/7/2021
MCE PROJ. #	08195-0001
DRAWN	CPH
DESIGNED	ALM/DPJj
CHECKED	DPJj
PROJ. MGR.	DPJj

SCALE — HORIZONTAL: AS SHOWN; VERTICAL: N/A

C-110 — DRAWING NUMBER — REVISION

STATUS: ISSUED FOR PERMIT NOT FOR CONSTRUCTION

\\MCKIMCREED.COM\NASUNI\DATA\PROJ\08195\0001\ENG\80-DRAWINGS\CIVIL\SOUTH SITE\C-110 DEMOLITION PLAN.DWG 11/19/2021 12:30:25 ALEX MAINIERO

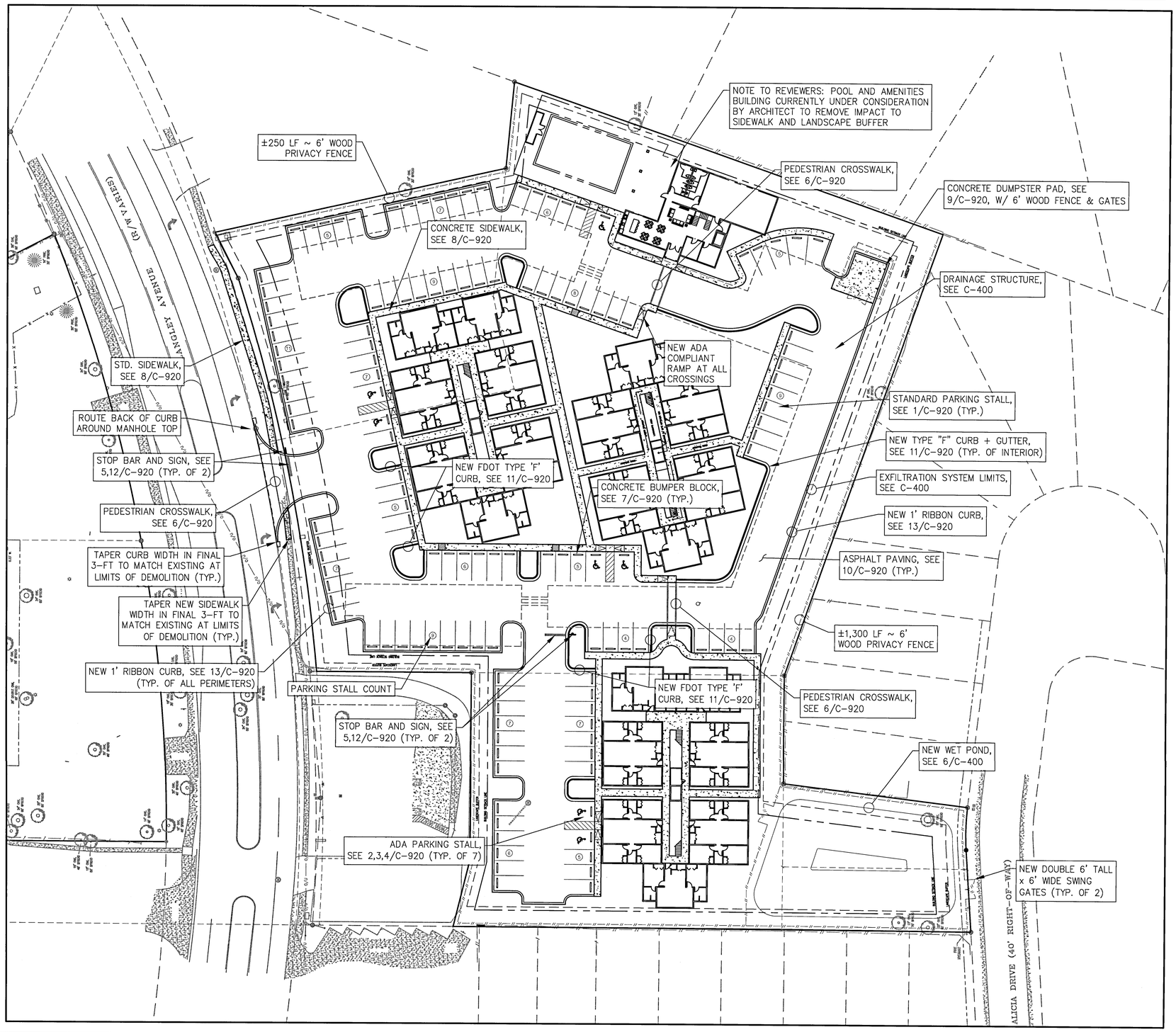

SITE NOTES

1. SUITES SHOULD BE NUMBERED SO THAT BUILDING NUMBER, FLOOR, AND UNIT ON THAT FLOOR CAN BE GLEANED FROM A SINGLE NUMBER. EXAMPLE: FOR BUILDING 2, 3RD FLOOR, 4TH UNIT ON THE 3RD FLOOR, THE SUITE WOULD BE 2304.

N

30' 0 30' 60'

SCALE: 1"=30' (Horiz.)

REV.NO	DESCRIPTION	DATE

REVISIONS

STATE OF FLORIDA PROFESSIONAL ENGINEER
D. PATRICK JEHLE, JR.
No. 71528

McKIM&CREED

1206 N. Palafox Street
Pensacola, Florida 32501
Phone: (850) 994-9503

CA Lic. No. 29588
www.mckimcreed.com

AERO SPACES HOUSING MULTI-FAMILY

CIVIL - SOUTH SITE

IMPROVEMENTS PLAN

PROJ. START DATE:	10/7/2021
MCE PROJ. #	08195-0001
DRAWN	CPH
DESIGNED	ALM/DPJ
CHECKED	DPJ
PROJ. MGR.	DPJ

SCALE
HORIZONTAL: AS SHOWN
VERTICAL: N/A

C-200
DRAWING NUMBER
REVISION

STATUS: ISSUED FOR PERMIT
NOT FOR CONSTRUCTION

\\MCKIMCREED.COM\NASUNI\DATA\PROJ\08195\0001\ENG\80-DRAWINGS\CIVIL\SOUTH SITE\C-200 IMPROVEMENTS PLAN.DWG 11/19/2021 12:31:10 ALEX MANIERO

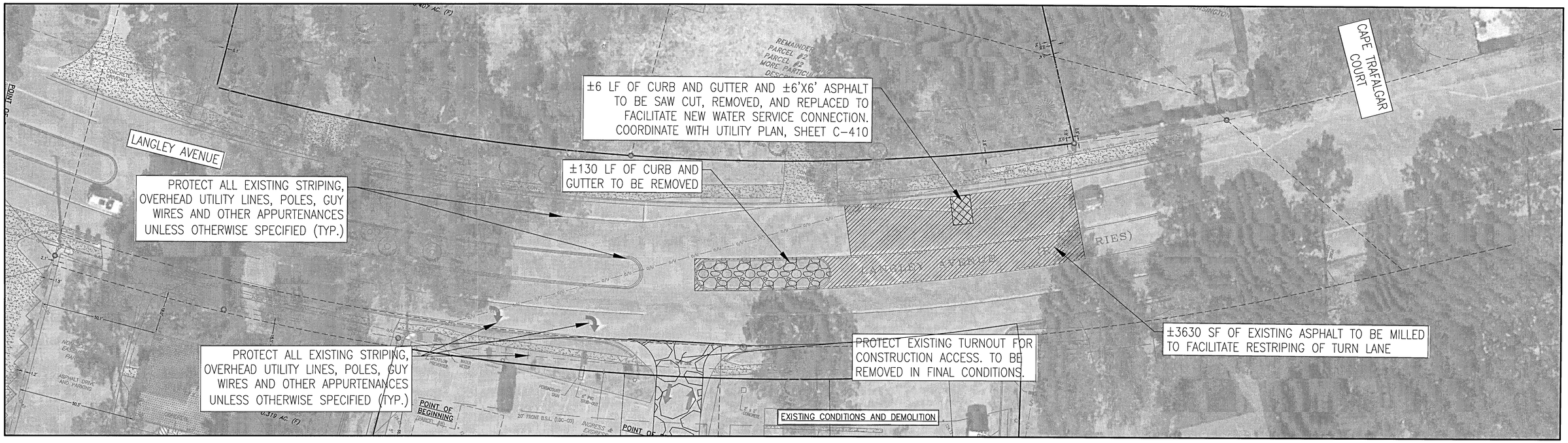

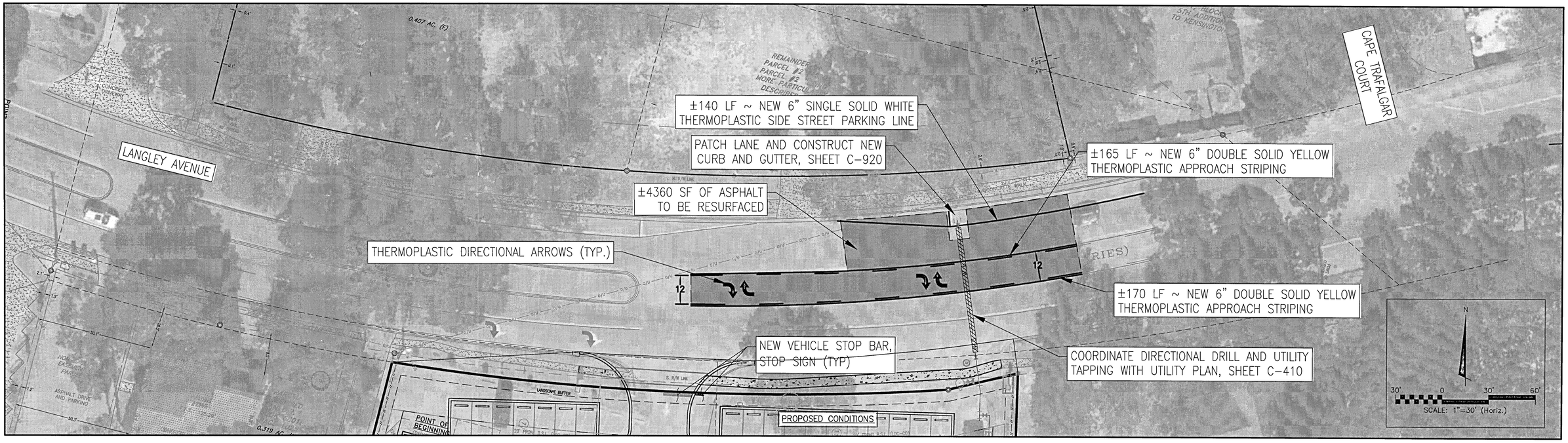

REV.NO.	DESCRIPTION	DATE

REVISIONS

D. PATRICK JEHLE, JR.
No. 71539
STATE OF FLORIDA
PROFESSIONAL ENGINEER

McKIM&CREED
1206 N. Palafox Street
Pensacola, Florida 32501
Phone: (850) 994-9503

CA Lic. No. 29588
www.mckimcreed.com

AERO SPACES HOUSING MULTI-FAMILY

CIVIL - SOUTH SITE

TURN LANE IMPROVEMENTS

PROJ. START DATE:	10/7/2021
MCE PROJ. #	08195-0001
DRAWN	CPH
DESIGNED	ALM/DPJj
CHECKED	DPJj
PROJ. MGR.	DPJj

SCALE
HORIZONTAL: AS SHOWN
VERTICAL: N/A

C-201
DRAWING NUMBER
REVISION

STATUS: ISSUED FOR PERMIT
NOT FOR CONSTRUCTION

E:\08195\0001\ENG\80-DRAWINGS\CIVIL\SOUTH SITE\C-201 TURN LANE IMPROVEMENTS.DWG 11/19/2021 13:48:45 ALEX MAINIERO

N

30' 0 30' 60'

SCALE: 1"=30' (Horiz.)

REV.NO.	DESCRIPTION	DATE

REVISIONS

D. PATRICK JEHLE, JR.
No. 71528
STATE OF FLORIDA
PROFESSIONAL ENGINEER

McKIM&CREED
1206 N. Palafox Street
Pensacola, Florida 32501
Phone: (850) 994-9503

CA Lic. No. 29588
www.mckimcreed.com

AERO SPACES HOUSING MULTI-FAMILY

CIVIL - SOUTH SITE

DIMENSIONING PLAN

PROJ. START DATE:	10/7/2021
MCE PROJ. #	08195-0001
DRAWN	CPH
DESIGNED	ALM/DPJ
CHECKED	DPJ
PROJ. MGR.	DPJ

SCALE
HORIZONTAL: AS SHOWN
VERTICAL: N/A

C-210
DRAWING NUMBER
REVISION

STATUS: ISSUED FOR PERMIT NOT FOR CONSTRUCTION

\\MCKIMCREED.COM\NASUNI\DATA\PROJ\08195\0001\ENG\80-DRAWINGS\CIVIL\SOUTH SITE\C-210 DIMENSIONING PLAN.DWG 11/19/2021 12:31:40 ALEX MAINIERO

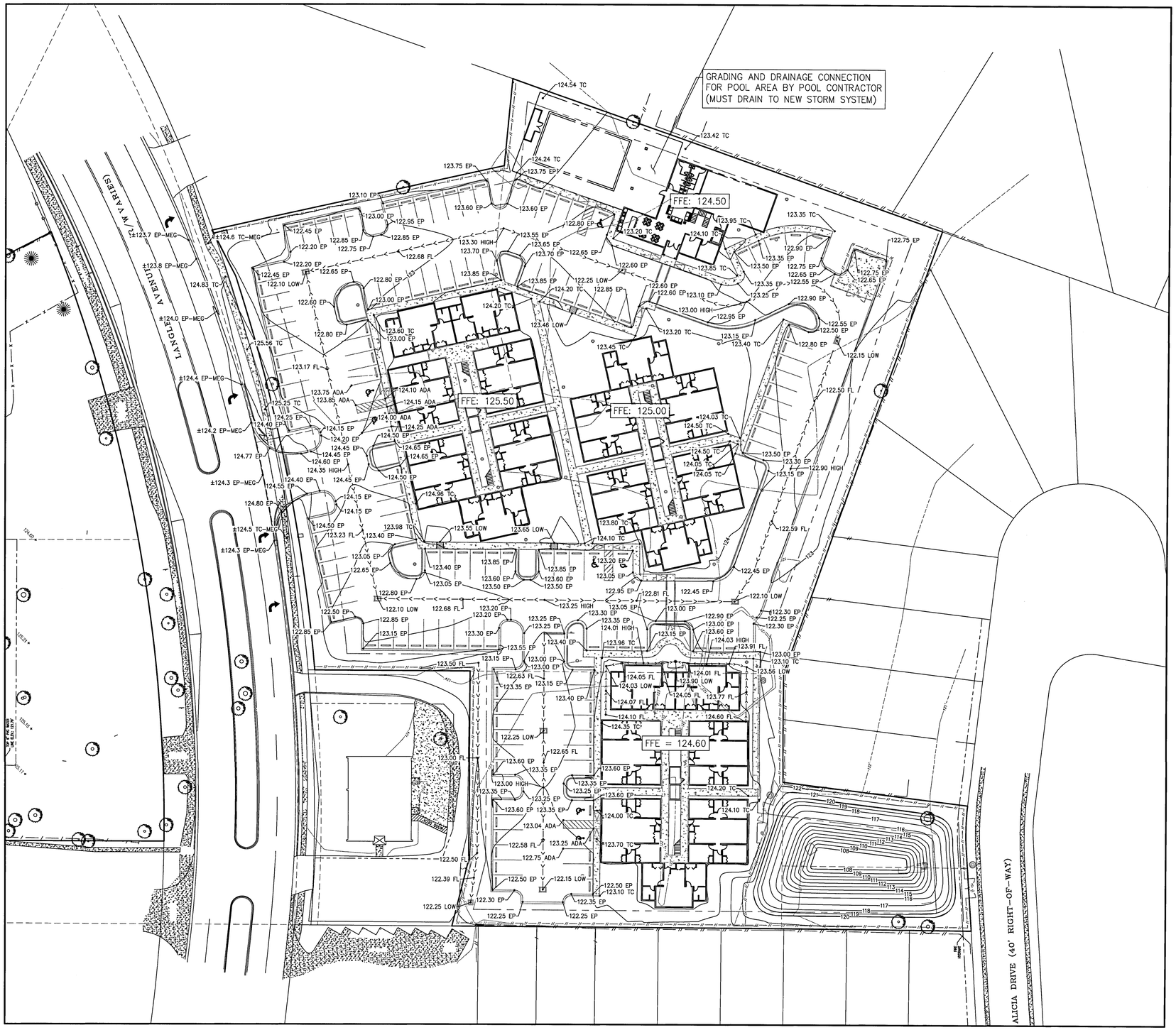

GRADING NOTES:

1. THE FOLLOWING ABBREVIATIONS APPLY TO PROPOSED SPOT ELEVATIONS:
   - FFE = FINISHED FLOOR ELEVATION
   - EP = EDGE OF PAVEMENT
   - FG = FINAL GRADE (EXTERIOR)
   - FL = FLOW LINE
   - MEG = MATCH EXISTING GRADE
   - TC = TOP OF CONCRETE
   - LOW = LOW POINT
2. CONTRACTOR MUST ENSURE ZERO DISTURBANCE TO AREAS OUTSIDE THE SUBJECT PARCEL LIMITS
3. CONTRACTOR IS RESPONSIBLE FOR GRADING SITE TO ACHIEVE PROPOSED FLOW PATTERNS INDICATED BY FLOW ARROWS. IN ALL CASES, RUNOFF MUST BE DIRECTED AWAY FROM BUILDING, WALKS AND PADS.
4. ALL AREAS DISTURBED DUE TO CONSTRUCTION ACTIVITIES, INCLUDING RIGHTS OF WAY, MUST BE GRADED SMOOTH AND FULLY STABILIZED WITH SOLID PINNED SOD PRIOR TO FINAL ACCEPTANCE WHETHER INDICATED ON THE PLANS OR NOT,.
5. VIBRATORY COMPACTION OPERATIONS SHOULD NOT BE PERFORMED WITHIN A CLEAR DISTANCE OF 50 FEET FROM ANY ADJACENT STRUCTURES
6. ALL ADEQUATE TREE PROTECTION MEASURES AND BARRICADES SHALL BE INSTALLED PRIOR TO SITE DISTURBANCE AND MAINTAINED IN GOOD WORKING ORDER UNTIL PROJECT IS COMPLETE AND SITE BECOMES STABILIZED.

N

30' 0 30' 60'

SCALE: 1"=30' (Horiz.)

REV.NO	DESCRIPTION	DATE

REVISIONS

D. PATRICK JEHLE, JR. No. 71528 STATE OF FLORIDA PROFESSIONAL ENGINEER

McKIM&CREED
1206 N. Palafox Street
Pensacola, Florida 32501
Phone: (850) 994-9503
CA Lic. No. 29588
www.mckimcreed.com

AERO SPACES HOUSING MULTI-FAMILY

CIVIL - SOUTH SITE

GRADING PLAN

PROJ. START DATE:	10/7/2021
MCE PROJ. #	08195-0001
DRAWN	CPH
DESIGNED	ALM/DPJ
CHECKED	DPJ
PROJ. MGR.	DPJ

SCALE
HORIZONTAL: AS SHOWN
VERTICAL: N/A

C-300
DRAWING NUMBER
-
REVISION

STATUS: ISSUED FOR PERMIT
NOT FOR CONSTRUCTION

\\MCKIMCREED.COM\NASUNI\DATA\PROJ\08195\0001\ENG\80-DRAWINGS\CIVIL\SOUTH SITE\C-300 GRADING PLAN.DWG 11/19/2021 12:32:22 ALEX MAINIERO

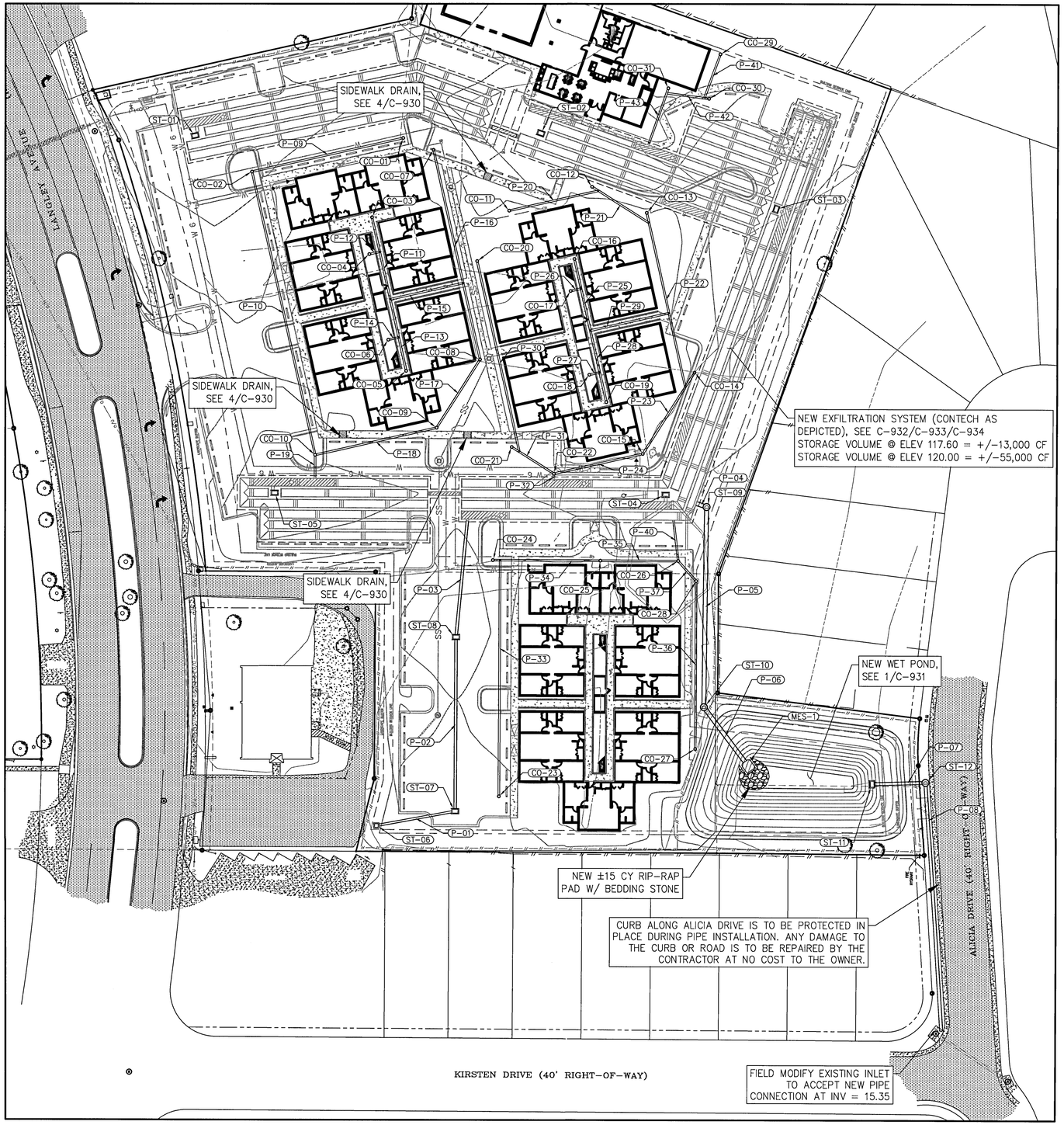

DRAINAGE STRUCTURE TABLE				
NAME	STRUCTURE DESCRIPTION	NORTHING EASTING	RIM/GRATE ELEVATION	PIPE INVERT
CO-01	CLEANOUT	N:550748.83 E:1122995.25	124.60	INV IN (P-09, N) = 120.70
CO-02	CLEANOUT	N:550831.19 E:1122976.83	123.83	INV OUT (P-09, S) = 121.15 INV OUT (P-10, W) = 120.70
CO-03	CLEANOUT	N:550765.77 E:1122951.98	125.30	INV OUT (P-11, W) = 121.70
CO-04	CLEANOUT	N:550767.21 E:1122931.89	125.30	INV OUT (P-12, S) = 121.15
CO-05	CLEANOUT	N:550747.02 E:1122868.18	125.30	INV OUT (P-13, E) = 121.65
CO-06	CLEANOUT	N:550756.76 E:1122885.17	125.30	INV OUT (P-14, S) = 121.15
CO-07	CLEANOUT	N:550732.35 E:1122988.83	124.52	INV OUT (P-16, W) = 121.65
CO-08	CLEANOUT	N:550706.75 E:1122874.43	124.68	INV IN (P-16, E) = 121.05 INV OUT (P-17, NW) = 121.05
CO-09	CLEANOUT	N:550730.37 E:1122837.18	124.92	INV IN (P-17, SE) = 120.80 INV OUT (P-18, N) = 120.80
CO-10	CLEANOUT	N:550796.62 E:1122822.36	124.07	INV IN (P-18, S) = 120.45 INV IN (P-10, E) = 119.90 INV OUT (P-19, W) = 119.90
CO-11	CLEANOUT	N:550691.00 E:1122955.64	124.88	INV OUT (P-20, S) = 122.00
CO-12	CLEANOUT	N:550646.01 E:1122968.73	125.07	INV OUT (P-21, SW) = 121.75
CO-13	CLEANOUT	N:550616.25 E:1122954.57	125.05	INV OUT (P-22, W) = 121.55
CO-14	CLEANOUT	N:550589.95 E:1122867.39	124.34	INV OUT (P-23, NW) = 121.05
CO-15	CLEANOUT	N:550618.09 E:1122823.03	124.00	INV IN (P-23, SE) = 120.80 INV OUT (P-24, N) = 120.80
CO-16	CLEANOUT	N:550855.53 E:1122929.29	125.30	INV OUT (P-25, W) = 121.65
CO-17	CLEANOUT	N:550657.52 E:1122911.85	125.30	INV OUT (P-26, S) = 122.15
CO-18	CLEANOUT	N:550647.30 E:1122866.15	124.95	INV OUT (P-27, S) = 122.15
CO-19	CLEANOUT	N:550638.06 E:1122851.22	124.58	INV OUT (P-28, E) = 121.65
CO-20	CLEANOUT	N:550708.45 E:1122928.14	125.15	INV OUT (P-30, W) = 122.30
CO-21	CLEANOUT	N:550689.34 E:1122826.78	124.11	INV OUT (P-31, SW) = 121.75
CO-22	CLEANOUT	N:550666.39 E:1122812.22	124.06	INV IN (P-24, S) = 120.50 INV IN (P-31, NE) = 121.60 INV OUT (P-32, W) = 119.10
CO-23	CLEANOUT	N:550696.00 E:1122636.18	122.63	INV OUT (P-33, E) = 119.75
CO-24	15" INLINE DRAIN	N:550699.47 E:1122764.93	124.20	INV OUT (P-34, S) = 119.10
CO-25	15" INLINE DRAIN	N:550640.96 E:1122764.70	123.18	INV IN (P-34, N) = 118.80 INV OUT (P-35, S) = 118.80
CO-26	15" INLINE DRAIN	N:550598.48 E:1122764.54	123.11	INV IN (P-35, N) = 118.60 INV IN (P-37, SW) = 120.05 INV OUT (P-40, E) = 118.60
CO-27	CLEANOUT	N:550589.00 E:1122662.24	122.46	INV OUT (P-36, E) = 120.60
CO-28	CLEANOUT	N:550588.65 E:1122753.62	123.18	INV IN (P-36, W) = 120.15 INV OUT (P-37, NE) = 120.15
CO-29	CLEANOUT	N:550576.18 E:1123040.98	124.40	INV OUT (P-41, W) = 120.80
CO-30	CLEANOUT	N:550582.36 E:1123016.87	123.41	INV OUT (P-42, N) = 120.55
CO-31	CLEANOUT	N:550604.60 E:1123022.53	124.10	INV OUT (P-43, W) = 120.30
MES-1	MES	N:550560.61 E:1122653.81	117.36	INV IN (P-06, NE) = 115.20
ST-01	FDOT TYPE C INLET	N:550862.24 E:1122996.49	122.00	DIRECT CONNECTION TO EXFILTRATION SYSTEM
ST-02	FDOT TYPE C INLET	N:550673.84 E:1122997.93	123.82	DIRECT CONNECTION TO EXFILTRATION SYSTEM
ST-03	FDOT TYPE C INLET	N:550545.68 E:1122956.66	123.00	DIRECT CONNECTION TO EXFILTRATION SYSTEM
ST-04	FDOT TYPE C INLET	N:550605.46 E:1122800.74	122.00	DIRECT CONNECTION TO EXFILTRATION SYSTEM
ST-05	FDOT TYPE C INLET	N:550818.65 E:1122801.69	122.50	DIRECT CONNECTION TO EXFILTRATION SYSTEM
ST-06	2x2 YARD INLET	N:550762.90 E:1122620.04	122.25	INV OUT (P-01, S) = 120.25
ST-07	FDOT TYPE C INLET	N:550719.80 E:1122627.98	121.88	INV IN (P-01, N) = 119.10 INV OUT (P-02, E) = 118.65
ST-08	FDOT TYPE C INLET	N:550719.43 E:1122722.98	122.25	INV IN (P-02, W) = 118.15 INV OUT (P-03, E) = 118.15
ST-09	STORM WATER MANHOLE	N:550583.13 E:1122794.11	122.55	INV IN (P-04, N) = 115.70 INV OUT (P-05, W) = 115.70
ST-10	STORM WATER MANHOLE	N:550584.33 E:1122685.00	122.83	INV IN (P-05, E) = 115.35 INV OUT (P-06, SW) = 115.35
ST-11	TYPE "E" CONTROL STRUCTURE	N:550492.40 E:1122643.19	119.50	INV OUT (P-07, S) = 116.50
ST-12	STORM PUMP MANHOLE	N:550463.29 E:1122644.01	117.84	INV IN (P-07, N) = 116.20 INV OUT (P-08, W) = 116.20

DRAINAGE PIPE TABLE				
NAME	SIZE	LENGTH	MATERIAL	INVERT
P-01	12"	44'	N12 HDPE	US INV = 120.25 DS INV = 119.10
P-02	15"	95'	N12 HDPE	US INV = 118.65 DS INV = 118.15
P-03	15"	63'	N12 HDPE	US INV = 118.15 DS INV = 117.75
P-04	24"	6'	N12 HDPE	US INV = 115.75 DS INV = 115.70
P-05	24"	109'	N12 HDPE	US INV = 115.70 DS INV = 115.35
P-06	24"	39'	N12 HDPE	US INV = 115.35 DS INV = 115.20
P-07	18"	29'	N12 HDPE	US INV = 116.50 DS INV = 116.20
P-08	18"	136'	N12 HDPE	US INV = 116.20 DS INV = 115.35
P-09	10"	84'	N12 HDPE	US INV = 121.15 DS INV = 120.70
P-10	10"	158'	N12 HDPE	US INV = 120.70 DS INV = 119.90
P-11	10"	46'	N12 HDPE	US INV = 121.70 DS INV = 121.45
P-12	10"	6'	N12 HDPE	US INV = 121.15 DS INV = 121.05
P-13	10"	40'	N12 HDPE	US INV = 121.65 DS INV = 121.45
P-14	10"	6'	N12 HDPE	US INV = 121.15 DS INV = 121.05
P-15	10"	41'	N12 HDPE	US INV = 121.45 DS INV = 121.25
P-16	10"	117'	N12 HDPE	US INV = 121.65 DS INV = 121.05
P-17	10"	44'	N12 HDPE	US INV = 121.05 DS INV = 120.80
P-18	10"	68'	N12 HDPE	US INV = 120.80 DS INV = 120.45
P-19	10"	12'	N12 HDPE	US INV = 119.90 DS INV = 119.25
P-20	10"	50'	N12 HDPE	US INV = 122.00 DS INV = 121.75
P-21	10"	37'	N12 HDPE	US INV = 121.75 DS INV = 121.55
P-22	10"	97'	N12 HDPE	US INV = 121.55 DS INV = 121.05
P-23	10"	53'	N12 HDPE	US INV = 121.05 DS INV = 120.80
P-24	10"	49'	N12 HDPE	US INV = 120.80 DS INV = 120.50
P-25	10"	40'	N12 HDPE	US INV = 121.65 DS INV = 121.45
P-26	10"	6'	N12 HDPE	US INV = 122.15 DS INV = 122.05
P-27	10"	6'	N12 HDPE	US INV = 122.15 DS INV = 122.05
P-28	10"	40'	N12 HDPE	US INV = 121.65 DS INV = 121.45
P-29	10"	44'	N12 HDPE	US INV = 121.45 DS INV = 121.25
P-30	10"	107'	N12 HDPE	US INV = 122.30 DS INV = 121.75
P-31	10"	27'	N12 HDPE	US INV = 121.75 DS INV = 121.60
P-32	10"	4'	N12 HDPE	US INV = 119.10 DS INV = 119.00
P-33	10"	129'	N12 HDPE	US INV = 119.75 DS INV = 119.10
P-34	10"	59'	N12 HDPE	US INV = 119.10 DS INV = 118.80
P-35	10"	42'	N12 HDPE	US INV = 118.80 DS INV = 118.60
P-36	10"	91'	N12 HDPE	US INV = 120.60 DS INV = 120.15
P-37	10"	15'	N12 HDPE	US INV = 120.15 DS INV = 120.05
P-40	10"	23'	N12 HDPE	US INV = 118.60 DS INV = 118.40
P-41	10"	25'	N12 HDPE	US INV = 120.80 DS INV = 120.55
P-42	10"	23'	N12 HDPE	US INV = 120.55 DS INV = 120.30
P-43	10"	32'	N12 HDPE	US INV = 120.30 DS INV = 119.00

N
30' 0 30' 60'
SCALE: 1"=30' (Horiz.)

REV.NO.	DESCRIPTION	DATE

REVISIONS

D. PATRICK JEHLE, JR. No. 71529 STATE OF FLORIDA PROFESSIONAL ENGINEER

McKIM&CREED
1206 N. Palafox Street
Pensacola, Florida 32501
Phone: (850) 994-9503
CA Lic. No. 29588
www.mckimcreed.com

AERO SPACES HOUSING MULTI-FAMILY

CIVIL - SOUTH SITE

STORM WATER PLAN

PROJ. START DATE:	10/7/2021
MCE PROJ. #	08195-0001
DRAWN	CPH
DESIGNED	ALM/DPJj
CHECKED	DPJj
PROJ. MGR.	DPJj

SCALE
HORIZONTAL: AS SHOWN
VERTICAL: N/A

C-400
DRAWING NUMBER
-
REVISION

STATUS: ISSUED FOR PERMIT
NOT FOR CONSTRUCTION

\\MCKIMCREED.COM\NASUNI\DATA\PROJ\08195\0001\ENG\80-DRAWINGS\CIVIL\SOUTH SITE\C-400 STORM WATER PLAN.DWG 11/19/2021 12:33:14 ALEX MAINIERO

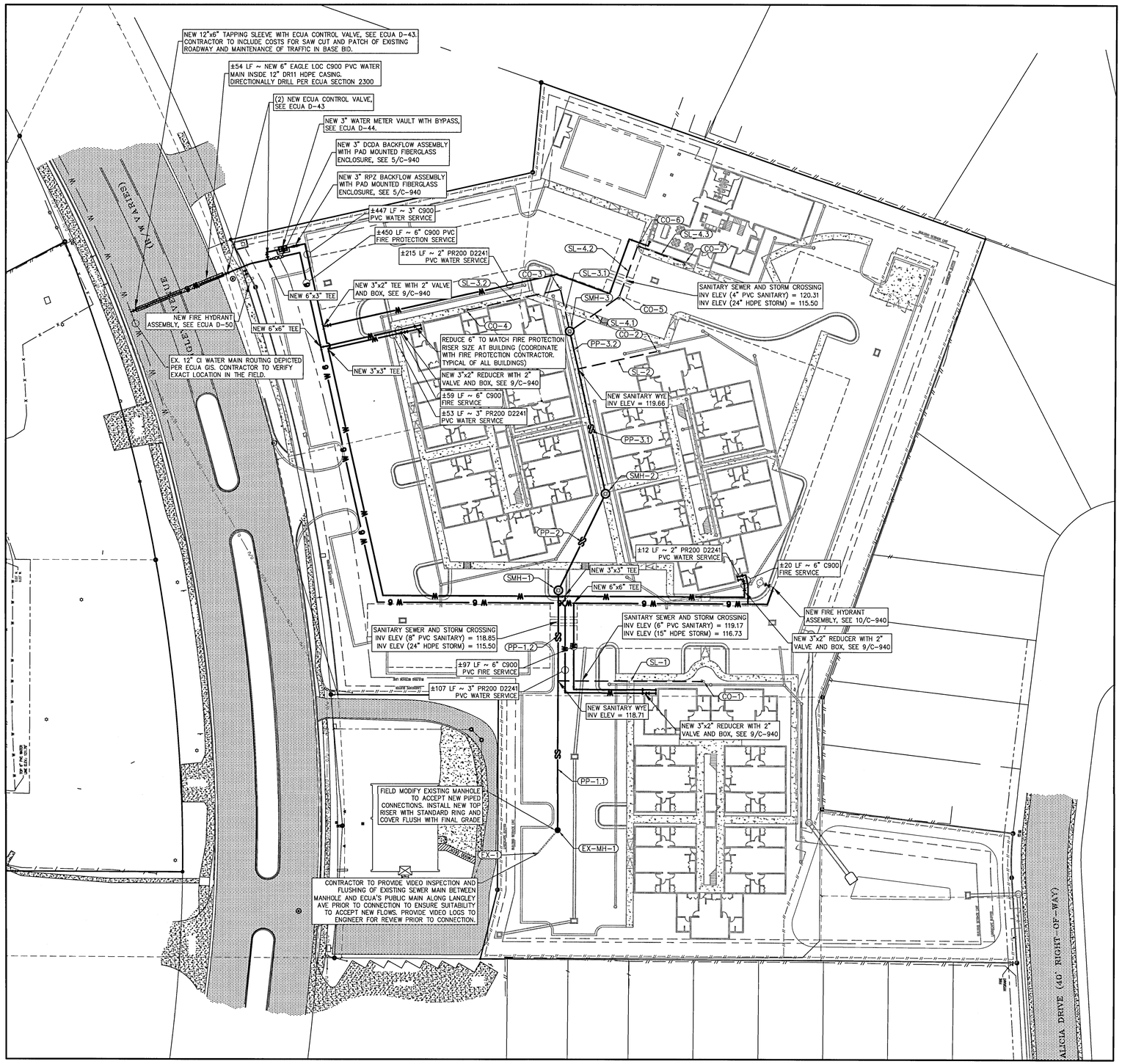

Structure Table	
STRUCTURE #	DESCRIPTION
CO-1	NEW CLEANOUT TOP EL = 123.89 INV EL (6" OUT, N) =121.60
CO-2	NEW CLEANOUT TOP EL = 123.91 INV EL (6" OUT, N) =121.57
CO-3	NEW CLEANOUT TOP EL = 123.63 INV EL (6" IN, N) =120.82 INV EL (6" OUT, W) =120.82
CO-4	NEW CLEANOUT TOP EL = 124.02 INV EL (6" OUT, S) =122.39
CO-5	NEW CLEANOUT TOP EL = 122.90 INV EL (4" IN, E) =120.21 INV EL (4" OUT, NW) =120.21
CO-6	NEW CLEANOUT TOP EL = 122.64 INV EL (4" IN, S) =120.54 INV EL (4" OUT, W) =120.54
CO-7	NEW CEANOUT TOP EL = 123.14 INV EL (4" OUT, N) =121.50
EX-MH-1	NEW EXISTING MANHOLE TOP TO BE ADJUSTED 123.18 TOP EL = 123.18 INV EL (8" IN, E) =118.36 INV EL (8" OUT, NW) =118.26
SMH-1	NEW MANHOLE TOP EL = 124.12 INV EL (8" IN, SE) =119.02 INV EL (8" OUT, W) =118.92
SMH-2	NEW MANHOLE TOP EL = 124.49 INV EL (8" IN, E) =119.37 INV EL (8" OUT, NW) =119.27
SMH-3	NEW MANHOLE TOP EL = 124.32 INV EL (6" IN, E) =119.85 INV EL (4" IN, SE) =119.85 INV EL (8" OUT, W) =119.75

Pipe Table			
Pipe Name	Size	Length	Slope
EX-1	8"	±62'	0.40%
PP-1.1	8"	±86'	0.40%
PP-1.2	8"	±52'	0.40%
PP-2	8"	±62'	0.40%
PP-3.1	8"	±74'	0.40%
PP-3.2	8"	±22'	0.40%
SL-1	6"	±84'	3.44%
SL-2	6"	±47'	4.07%
SL-3.1	6"	±25'	3.91%
SL-3.2	6"	±56'	2.83%
SL-4.1	4"	±35'	1.04%
SL-4.2	4"	±31'	1.06%
SL-4.3	4"	±29'	3.33%

N
30' 0 30' 60'
SCALE: 1"=30' (Horiz.)

SITE UTILITY NOTES:

1. CONTRACTOR IS CAUTIONED: EXISTING UTILITY LOCATIONS SHOULD BE CONSIDERED APPROXIMATE ONLY AND CONTRACTOR MUST FIELD VERIFY EXISTING ALIGNMENT, DEPTH, MATERIAL AND SIZE OF ALL EXISTING UTILITY LINES WITHIN THE AREAS OF CONSTRUCTION PRIOR TO COMMENCEMENT OF ANY EARTHWORK ACTIVITIES. ANY CONFLICTS BETWEEN THE EXISTING UTILITIES AND THE PROPOSED CONSTRUCTION MUST BE BROUGHT TO THE ATTENTION OF THE ENGINEER SUCH THAT AN ALTERNATIVE SOLUTION CAN BE DEVELOPED PRIOR TO ANY EARTHWORK, PROPOSED UTILITIES OR STORM WATER BEING INSTALLED.
2. CONTRACTOR MUST REFER TO THE LATEST EDITION OF THE ECUA ENGINEERING MANUAL FOR ADDITIONAL STANDARDS AND TECHNICAL INFORMATION.
3. SEE DEMOLITION PLAN FOR MAINTENANCE OF TRAFFIC REQUIREMENTS FOR WORK WITHIN THE LANGLEY AVENUE RIGHT-OF-WAY..

REV.NO	DESCRIPTION	DATE

REVISIONS

D. PATRICK JEHLE, JR. No.71528 STATE OF FLORIDA PROFESSIONAL ENGINEER

McKIM&CREED
1206 N. Palafox Street
Pensacola, Florida 32501
Phone: (850) 994-9503
CA Lic. No. 29588
www.mckimcreed.com

AERO SPACES HOUSING MULTI-FAMILY

CIVIL - SOUTH SITE

UTILITY PLAN

PROJ. START DATE:	10/7/2021
MCE PROJ. #	08195-0001
DRAWN	CPH
DESIGNED	ALM/DPJj
CHECKED	DPJj
PROJ. MGR.	DPJj

SCALE
HORIZONTAL: AS SHOWN
VERTICAL: N/A

C-410
DRAWING NUMBER
-
REVISION

STATUS: ISSUED FOR PERMIT
NOT FOR CONSTRUCTION

\\MCKIMCREED.COM\NASUNI\DATA\PROJ\08195\0001\ENG\80-DRAWINGS\CIVIL\SOUTH SITE\C-410 UTILITY PLAN.DWG 11/19/2021 12:34:10 ALEX MAINIERO

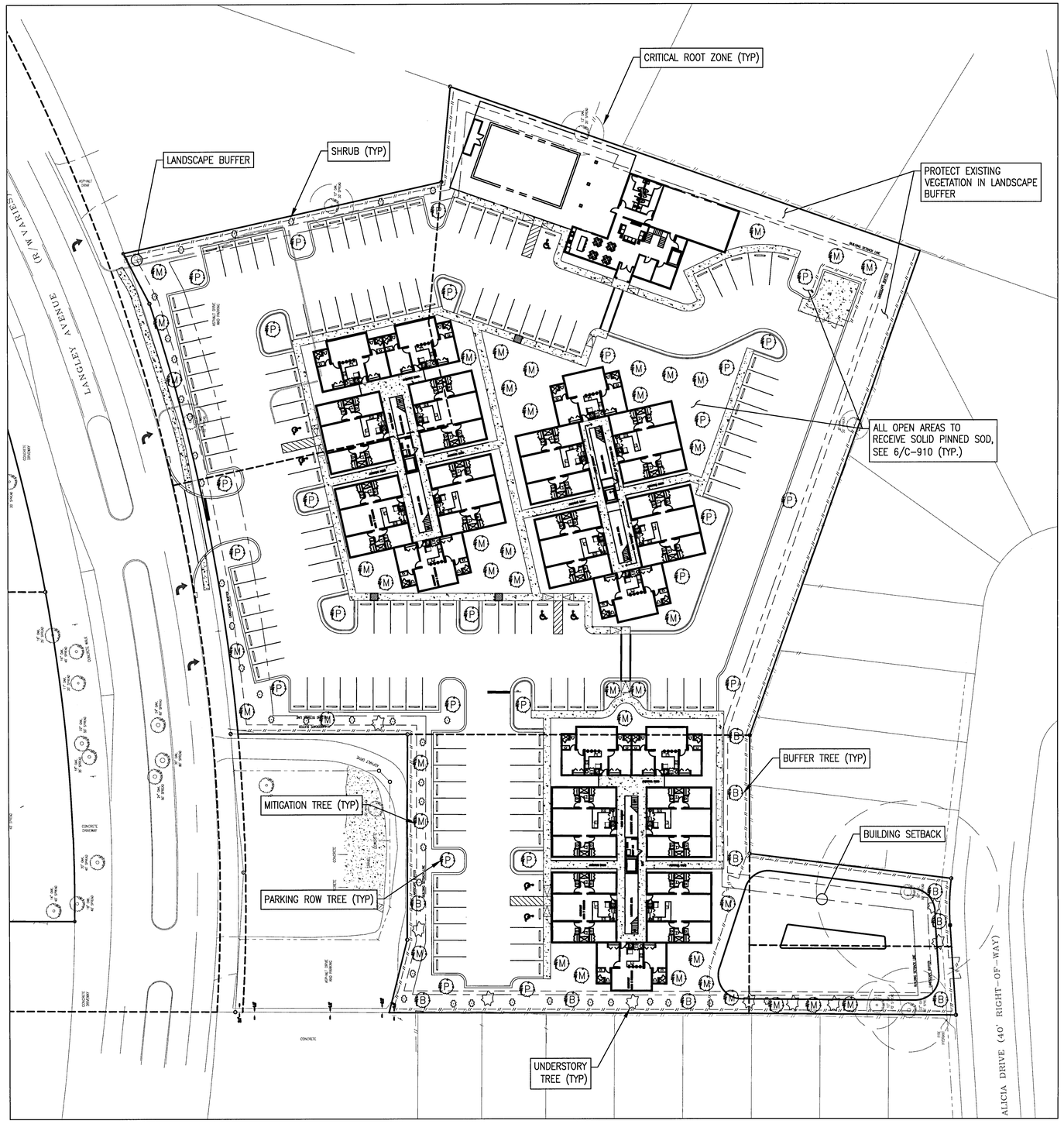

TREE SCHEDULE						
TREE #	JURISDICTION	SPECIES	CANOPY	DIAMETER	STATUS	MITIGATE
T1	COUNTY	OAK	55'	34.5"	REMOVE	YES
T2	COUNTY	OAK	60'	44"	REMOVE	YES
T3	COUNTY	OAK	70'	37"	REMOVE	YES
T4	COUNTY	OAK	50'	26.4"	REMOVE	YES
T5	COUNTY	OAK	30'	17.83"	REMOVE	YES
T6	COUNTY	OAK	50'	36.5"	REMOVE	YES
T7	COUNTY	OAK	40'	19.6"	REMOVE	YES
T8	COUNTY	OAK	30'	13.5"	REMOVE	YES
T9	COUNTY	OAK	40'	16"	REMOVE	YES
T10	COUNTY	OAK	50'	27.5"	REMOVE	YES
T11	COUNTY	OAK	60'	31.7"	REMOVE	YES
T12	COUNTY	OAK	40'	24.13"	REMOVE	YES
T13	COUNTY	OAK	45'	20.8"	REMOVE	YES
T14	COUNTY	OAK	55'	20.8"	REMOVE	YES
T15	COUNTY	OAK	55'	34"	REMOVE	YES
T16	COUNTY	OAK	55'	14"	REMOVE	YES
T17	COUNTY	OAK	30'	12"	PROTECT	---
T18	COUNTY	OAK	35'	12"	PROTECT	---
T19	COUNTY	OAK	20'	8"	PROTECT	---
T20	COUNTY	OAK	90'	50"	PROTECT	---
T21	COUNTY	OAK	70'	13"	PROTECT	---
T22	COUNTY	OAK	80'	23"	PROTECT	---

TREE PLANTING SCHEDULE

REQUIRED
PARKING 1 CANOPY TREE PER PARKING ROW TERMINATION = **26** TREES

MITIGATION
REQUIRED 50% OF REMOVED = **419"** REMOVED X 0.50 = **210"** INCHES OR **84**-2.5" TREES

BUFFER
REQUIRED TYPE A – 12' – 2.0 CANOPY, 1.0 UNDERSTORY, 10 SHRUBS PER 100 LF
750 LF OF BUFFER = **15** CANOPY, **8** UNDERSTORY, **71** SHRUBS

TOTAL
CANOPY 26 + (84-26)* + 15 = **99**-2.5" TOTAL TREES TO BE PLANTED
PARKING TREES CAN BE USED TOWARDS REQUIRED COUNT
UNDERSTORY **10** TOTAL TREES TO BE PLANTED
SHRUB **38** TOTAL SHRUBS TO BE PLANTED
*EXISTING VEGETATION TO REMAIN ALONG EASTERN AND SOUTHERN PROPERTY LINES.

PROVIDED
PARKING AREA = 47 CANOPY TREES
BUFFER AREAS = 10 CANOPY TREES, 10 UNDERSTORY, 38 SHRUBS
OTHER AREAS = 42 CANOPY TREES
TOTAL TREES = 99 CANOPY TREES (2.5" MIN. DIAMETER), 8 UNDERSTORY, 71 SHRUBS

THIS PLAN IS THE ENGINEER'S LANDSCAPING CONCEPT AND IS ONLY INTENDED TO BE A REPRESENTATION OF AN INSTALLATION THAT SATISFIES THE CRITERIA OF THE ESCAMBIA COUNTY LAND DEVELOPMENT CODE. THE OWNER MAY CHOOSE TO REVISE THIS LAYOUT TO BETTER SUIT THE INTENT OF THE SITE. PRIOR TO ANY LANDSCAPING OR IRRIGATION INSTALLATION, THE CONTRACTOR SHALL BE RESPONSIBLE FOR SUBMITTED ANY REVISIONS TO THIS LANDSCAPING PLAN TO ESCAMBIA COUNTY DEVELOPMENT SERVICES FOR FINAL APPROVAL. CONTRACTOR MUST COORDINATE WITH ARCHITECT FOR FINAL SPECIES DESIGNATION AND LOCATION OF ALL SITE PLANTING.

NOTE:
1. THE CONTRACTOR IS RESPONSIBLE FOR SODDING ALL AREAS INDICATED ON THE PLANS AND ALL OTHER AREAS WHICH ARE DISTURBED AS A RESULT OF CONSTRUCTION ACTIVITIES, WHETHER SUCH AREAS AND OR ACTIVITIES ARE INDICATED ON THE PLANS OR NOT.
2. NEW TREE PLANTING MUST CONTAIN A 6' RADIUS CLEAR ZONE FOR ROOTING.
3. ALL PLANTS REQUIRED BY THIS SECTION SHALL CONFORM TO THE STANDARDS FOR FLORIDA GRADE NO. 1, OR BETTER, AS PROVIDED IN THE LATEST EDITION OF GRADES AND STANDARDS FOR NURSERY PLANTS, DIVISION OF PLANT INDUSTRY, FLORIDA DEPARTMENT OF AGRICULTURE AND CONSUMER SERVICES.
4. ALL LANDSCAPING SHALL UTILIZE NATIVE PLANT SPECIES OR THOSE SPECIES LISTED IN THE FLORIDA-FRIENDLY LANDSCAPING™ GUIDE TO PLANT SELECTION AND LANDSCAPE DESIGN.
5. TREES PLANTED TO FULFILL THE MINIMUM LANDSCAPE REQUIREMENTS OF THIS ARTICLE SHALL NORMALLY ATTAIN A MATURE HEIGHT OF AT LEAST 20 FEET AND HAVE A MINIMUM CALIPER OF TWO AND ONE-HALF INCHES OR GREATER MEASURED AT FOUR INCHES ABOVE ROOT BALL AT PLANTING. THE FOLLOWING ADDITIONAL CRITERIA APPLY:1.NON-NATIVE SPECIES. NON-NATIVE SPECIES ARE LIMITED TO 25 PERCENT OR LESS OF THE TOTAL REQUIRED TREES PLANTED.2.DIVERSITY. THE DIVERSITY OF ANY TREES REQUIRED TO BE PLANTED ON A SITE SHALL COMPLY WITH THE FOLLOWING LIMITS TO AVOID UNIFORM SITE TREE DECLINE FROM PESTS OR DISEASE:

NUMBER OF NEW TREES PLANET ON SITE	MAX. PERCENTAGE OF ANY ONE SPECIES PLANTED
5–19	67%
20–49	40%
50 OR MORE	30%

6. ALL SHRUBS SHALL BE A MINIMUM OF 12 INCHES IN HEIGHT AT PLANTING.
7. CONSISTENT WITH FLORIDA-FRIENDLY PRACTICES, DEVELOPMENT SHOULD CONSOLIDATE AND LIMIT THE USE OF MOST TURF GRASSES TO ESSENTIAL AREAS. WHEN USED, GRASS SHALL BE SPECIES NORMALLY GROWN AS PERMANENT LAWNS IN ESCAMBIA COUNTY. ALL SOD SHALL BE CLEAN AND REASONABLY FREE OF WEEDS, NOXIOUS PESTS, AND DISEASES. WHEN GRASS AREAS ARE TO BE SEEDED, SPRIGGED, OR PLUGGED, SPECIFICATIONS MUST BE SUBMITTED. SUBSTANTIAL COVERAGE MUST BE ACHIEVED WITHIN 180 DAYS AND NURSE GRASS SHALL BE SOWN FOR IMMEDIATE EFFECTS AND PROTECTION UNTIL COVERAGE IS OTHERWISE ACHIEVED.
8. IT IS RECOMMENDED THE CONTRACTOR/OWNER CONSULT A LANDSCAPE ARCHITECT FOR TREE SPECIES DETERMINATION OF NEW PLANTINGS.

PLANT PLACEMENT
THE INSTALLATION OF PLANTS IN APPROPRIATE LOCATIONS IS ESSENTIAL TO THEIR LONG-TERM SURVIVAL. LOCATIONS SHOULD MATCH MATURE PLANT SIZE TO AVAILABLE SOIL VOLUME AND OTHER CONDITIONS FOR GROWTH. APPROPRIATE SEPARATION FROM PAVEMENT AND STRUCTURES, INCLUDING STREETS, DRIVEWAYS, CURBS, SIDEWALKS, SIGNS, LIGHTS AND UTILITIES MUST BE PROVIDED.

SIGHT DISTANCES
LANDSCAPING WITHIN THE SIGHT DISTANCE AREAS PRESCRIBED IN ARTICLE 5 FOR STREETS AND SITE ACCESS SHALL BE DESIGNED, INSTALLED AND MAINTAINED TO ALLOW VISIBILITY BETWEEN THREE FEET AND NINE FEET ABOVE GRADE. THE TRUNKS OF MATURE TREES TRIMMED OF FOLIAGE TO NINE FEET, AND NEWLY PLANTED TREES WITH IMMATURE CROWN DEVELOPMENT ALLOWING VISIBILITY ARE GENERALLY ACCEPTABLE WITHIN SUCH AREAS.

MINIMUM TREE AREA
EACH NEW TREE SHALL BE PLANTED AT THE CENTER OF A MINIMUM PERMANENT PERVIOUS ROOTING AREA CLEAR OF ALL OBSTRUCTIONS TO ALLOW GROWTH TO MATURITY. THE MINIMUM RADIUS OF THE ROOTING AREA SHALL BE FOUR FEET FOR AN UNDERSTORY TREE AND SIX FEET FOR A CANOPY TREE. THIS MINIMUM CIRCULAR AREA SHALL CONTAIN NO SIDEWALKS, CURBS OR PAVEMENT AND NO STRUCTURES, INCLUDING LIGHT OR UTILITY POLES, SIGNS, MANHOLES, STORMWATER INLETS, VAULTS, TRANSFORMERS, FIRE HYDRANTS OR BACKFLOW PREVENTERS.

MINIMUM TREE SPACING
EACH NEW CANOPY AND UNDERSTORY TREE SHALL BE PLANTED AT LEAST 12 FEET FROM ANY OTHER TREE. ADDITIONALLY, ANY TREES TO BE PLANTED WITHIN THE CRITICAL ROOT ZONES OF PRESERVED CANOPY TREES ARE LIMITED TO UNDERSTORY TREES.

OVERHEAD UTILITIES
WHERE OVERHEAD UTILITIES EXIST, ONLY PLANTS THAT WILL NOT CREATE PERSISTENT UTILITY MAINTENANCE OR INTERFERENCE PROBLEMS MAY BE INSTALLED. TO PREVENT TREES FROM BECOMING ENERGIZED OR DISRUPTING ELECTRICAL SERVICE, TREE PLANTING DIRECTLY BELOW POWER LINES SHALL BE AVOIDED AND ONLY UNDERSTORY TREES PLANTED NEAR POWER LINES. WITHIN AN ESTABLISHED ELECTRIC UTILITY RIGHT-OF-WAY NO VEGETATION SHALL BE PLANTED THAT WILL ACHIEVE A HEIGHT GREATER THAN 14 FEET OR INTRUDE FROM THE SIDE CLOSER THAN TEN FEET TO POWER LINES, OR EXCEED CLEARANCES OTHERWISE REQUIRED BY APPLICABLE ANSI STANDARDS. ANY CANOPY TREES PLANTED SHALL BE AT LEAST 25 FEET FROM POWER LINES, AND LARGE MATURING SPECIES SHOULD BE PLANTED AT LEAST 50 FEET AWAY.

N

30' 0 30' 60'

SCALE: 1"=30' (Horiz.)

REV.NO.	DESCRIPTION	DATE

REVISIONS

C. PATRICK JEHLE, JR. No. 71528 STATE OF FLORIDA PROFESSIONAL ENGINEER

McKIM&CREED
1206 N. Palafox Street
Pensacola, Florida 32501
Phone: (850) 994-9503
CA Lic. No. 29588
www.mckimcreed.com

AERO SPACES HOUSING MULTI-FAMILY

CIVIL - SOUTH SITE

LANDSCAPING PLAN

PROJ. START DATE:	10/7/2021
MCE PROJ. #	08195-0001
DRAWN	CPH
DESIGNED	ALM/DPJ
CHECKED	DPJ
PROJ. MGR.	DPJ

SCALE
HORIZONTAL: AS SHOWN
VERTICAL: N/A

C-500
DRAWING NUMBER

REVISION

STATUS: ISSUED FOR PERMIT
NOT FOR CONSTRUCTION

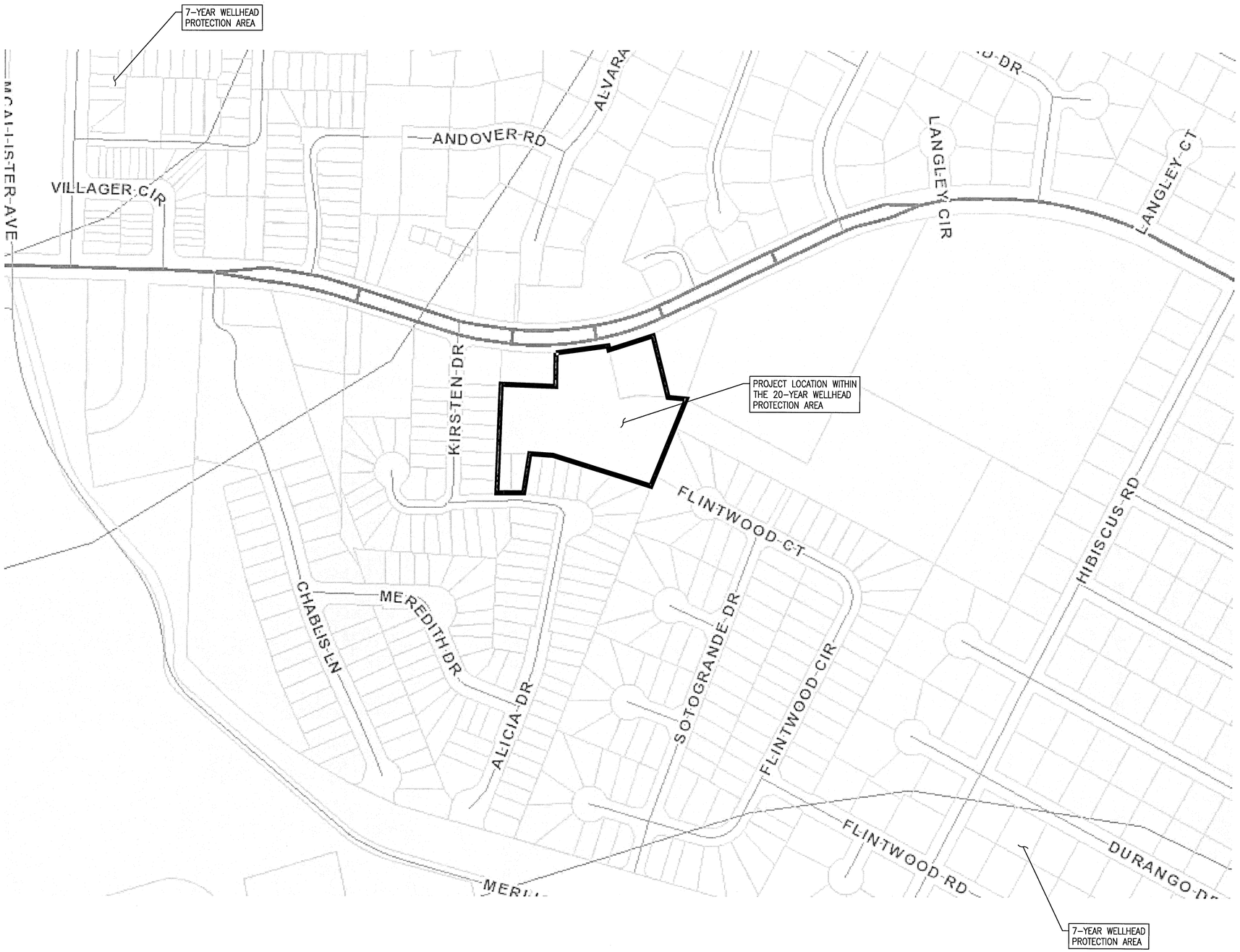

ENVIRONMENTAL AND WELLHEAD PROTECTION NOTES

1. THE SUBJECT PARCEL FALLS WITHIN THE TRAVEL TIME CONTOUR OF A PROTECTED (POTABLE) WELLHEAD. CONTRACTORS SHALL BE RESPONSIBLE FOR FOR REPORTING SPILLS OF POTENTIALLY HAZARDOUS SUBSTANCES (I.E. GASOLINE, DIESEL FUEL, HYDRAULIC FLUID, CLEANING PRODUCTS, CHEMICALS, ETC) TO THE APPROPRIATE STATE (FDEP STATE WARNING POINT 1-800-320-0519_ AND LOCAL (ECUA – EMERALD COAST UTILITIES AUTHRORITY (850) 476-5110 AND ESCAMBIA COUNTY HEALTH DEPARTMENT/ENVIRONMENTAL HEALTH 595-6712) AGENCIES.

N

30' 0 30' 60'

SCALE: 1"=30' (Horiz.)

REV.NO.	DESCRIPTION	DATE

REVISIONS

D. PATRICK JEHLE, JR. No. 71528 STATE OF FLORIDA PROFESSIONAL ENGINEER

McKIM&CREED
1206 N. Palafox Street
Pensacola, Florida 32501
Phone: (850) 994-9503

CA Lic. No. 29588
www.mckimcreed.com

AERO SPACES HOUSING MULTI-FAMILY

CIVIL - SOUTH SITE

ENVIRONMENTAL AND WELLHEAD PROTECTION

PROJ. START DATE:	10/7/2021
MCE PROJ. #	08195-0001
DRAWN	CPH
DESIGNED	ALM/DPJj
CHECKED	DPJj
PROJ. MGR.	DPJj

SCALE
HORIZONTAL: AS SHOWN
VERTICAL: N/A

C-600
DRAWING NUMBER
REVISION

STATUS: ISSUED FOR PERMIT NOT FOR CONSTRUCTION

\\MCKIMCREED.COM\NASUNI\DATA\PROJ\08195\0001\ENG\80-DRAWINGS\CIVIL\SOUTH SITE\C-600 ENVIRONMENTAL AND WELLHEAD PROTECTION.DWG 11/19/2021 12:34:56 ALEX MAINIERO

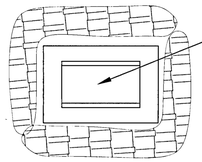

INSTALL FILTER FABRIC UNDER INLET GRATE IMMEDIATELY UPON INSTALLATION. REMOVE AND REPLACE WITH NEW FABRIC REGULARLY TO MAINTAIN FLOW AND REDUCE SEDIMENT ACCUMULATION.

NOTE:
SYNTHETIC BALES OR SEDIMENT LOG WILL BE PLACED AT COMMENCEMENT OF CONSTRUCTION OR IMMEDIATELY AFTER INLET INSTALLATION AND MAINTAINED THROUGHOUT PROJECT COMPLETION AND STABILIZATION.

INLET PROTECTION (1 / C-910)
NOT TO SCALE

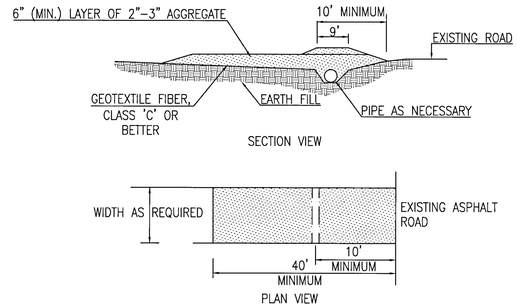

NOTES:
1. CONSTRUCTION ENTRANCES PROVIDE AN AREA WHERE MUD CAN BE REMOVED FROM VEHICLE TIRES BEFORE THEY LEAVE THE CONSTRUCTION SITE. THE MOTION OF THE VEHICLE AS IT MOVES OVER THE GRAVEL CONSTRUCTION MATERIAL DISLODGES CAKED MUD.
2. IF THE ACTION OF THE VEHICLE ON THE GRAVEL PAD IS NOT SUFFICIENT TO DISLODGE MUD, THEN THE TIRES MUST BE WASHED BEFORE THE VEHICLE LEAVES THE SITE.
3. UTILIZE GRAVEL, 2"-3" (MIN.) IN DIAMETER. GRAVEL LAYER SHOULD BE AT LEAST 6" THICK. THE PAD SHOULD BE AT LEAST 50' LONG. WIDTH SHOULD BE APPROPRIATE TO VEHICLE SIZE.

CONSTRUCTION ACCESS (2 / C-910)
NOT TO SCALE

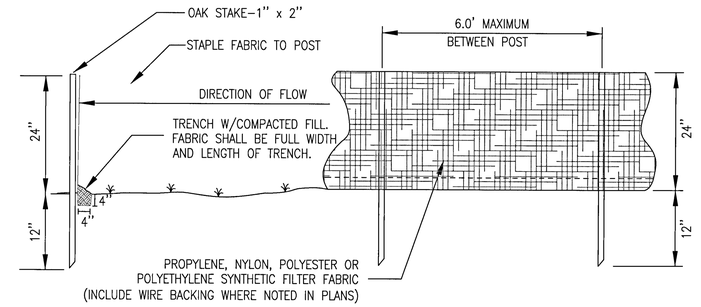

SILT FENCE (3 / C-910)
NOT TO SCALE

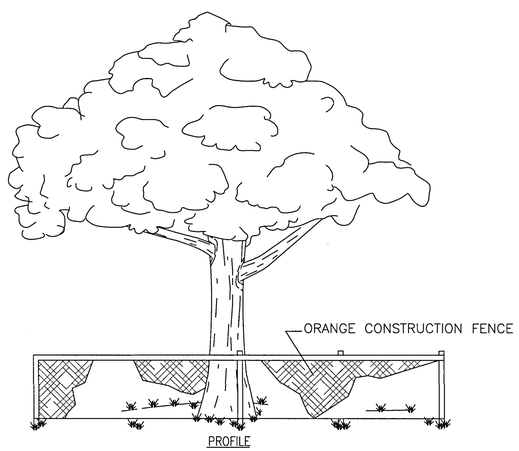

NOTES:
1. FOR TEMPORARY USE DURING CONSTRUCTION. BARRICADE SHALL BE PLACED PRIOR TO ANY LAND DISTURBANCE.
2. FENCE MATERIAL SHALL BE PLACED AT THE DRIP LINE OF THE TREE OR GROUP OF TREES TO BE PROTECTED.
3. NONE OF THE FOLLOWING ACTIVITIES SHALL OCCUR WITHIN THE TREE PROTECTION BARRICADE: DRIVING, PARKING, STORING MATERIALS, DUMPING WASTE, CONCRETE WASHOUT, ADDING FILL SOIL, TRENCHING, REMOVING SOIL OR GRUBBING.

TREE PROTECTION (4 / C-910)
NOT TO SCALE

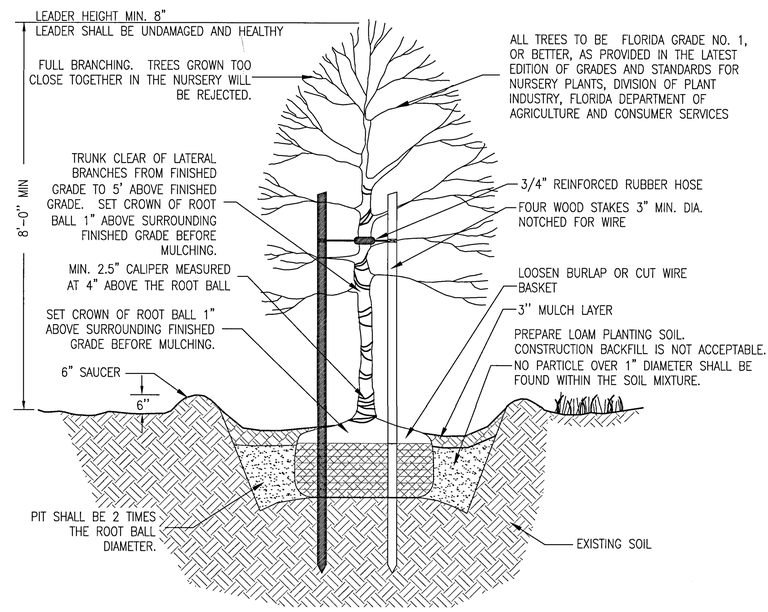

TREE PLANTING (5 / C-910)
NOT TO SCALE

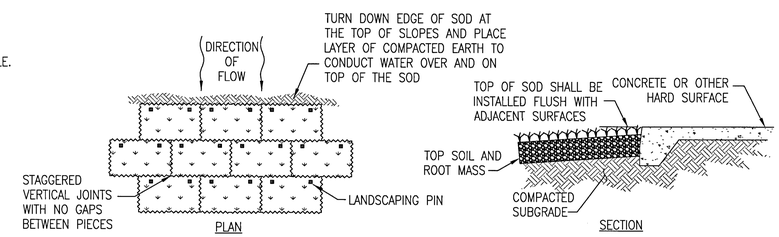

NOTES:
1. SEE WRITTEN SPECIFICATIONS FOR FULL DETAILS.
2. PLACE SOD BEGINNING AT THE TOE OF THE SLOPE AND LONG EDGE PERPENDICULAR TO DIRECTION OF FLOW.
3. SOD SHALL BE PINNED ON ALL SLOPES 4:1 OR STEEPER, IN AREAS OF CONCENTRATED DRAINAGE FLOWS, AND ANYWHERE THAT THERE IS DANGER OF SOD SLIPPING.
4. INSTALL SOD EDGES FLUSH WITH FINISHED GRADE OR ADJOINING SOD.

SODDING DETAIL (6 / C-910)
NOT TO SCALE

REV.NO.	DESCRIPTION	DATE
-	—	—

REVISIONS

D. PATRICK JEHLE, JR. No. 71523 STATE OF FLORIDA PROFESSIONAL ENGINEER

McKIM&CREED
1206 N. Palafox Street
Pensacola, Florida 32501
Phone: (850) 994-9503

CA Lic. No. 29588
www.mckimcreed.com

AERO SPACES HOUSING MULTI-FAMILY

DETAILS

EROSION CONTROL

PROJ. START DATE:	10/7/2021
MCE PROJ. #	08195-0001
DRAWN	CPH
DESIGNED	ALM/DPJj
CHECKED	DPJj
PROJ. MGR.	DPJj

SCALE
HORIZONTAL: AS SHOWN
VERTICAL: N/A

C-910
DRAWING NUMBER
-
REVISION

STATUS: ISSUED FOR PERMIT
NOT FOR CONSTRUCTION

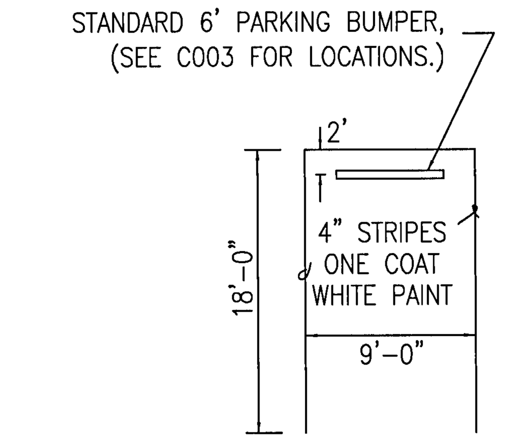

STANDARD PARKING STALL (1, C-920)
NOT TO SCALE

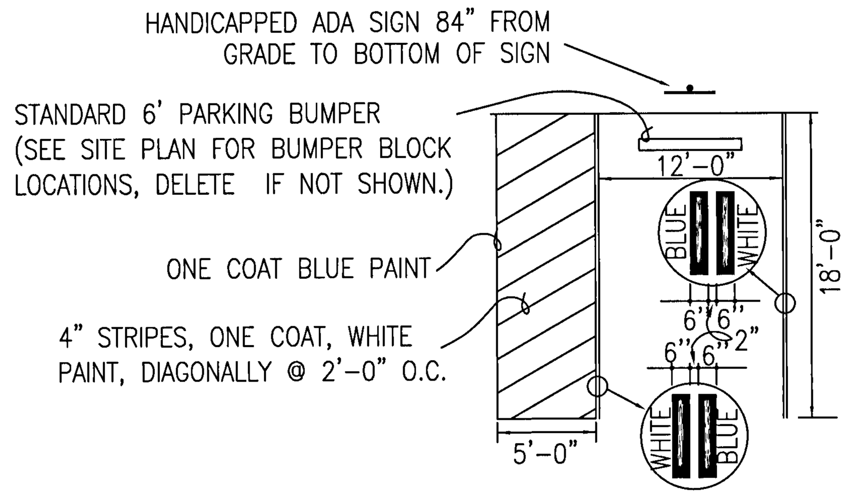

NOTES:
1. MAXIMUM SLOPES OF ADJOINING GUTTERS, ROAD SURFACE IMMEDIATELY ADJACENT TO THE CURB RAMP, OR ACCESSIBLE ROUTE SHALL NOT EXCEED 1:20.
2. THE MAXIMUM SLOPE OF A RAMP IN NEW CONSTRUCTION SHALL BE 1:12.
3. THE CROSS SLOPE OF RAMP SURFACES SHALL BE NO GREATER THAN 1:50.
4. EACH H.C. PARKING SPACE MUST BE SIGNED AND MARKED IN ACCORDANCE WITH THE STANDARDS ACCEPTED BY THE FLORIDA DEPARTMENT OF TRANSPORTATION AND FLORIDA ACCESSIBILITY CODE FOR BUILDING CONSTRUCTION.
5. MAINTAIN MAXIMUM 2% CONSTANT SLOPE ON THE ACCESS AISLE.

ADA PARKING STALL (2, C-920)
NOT TO SCALE

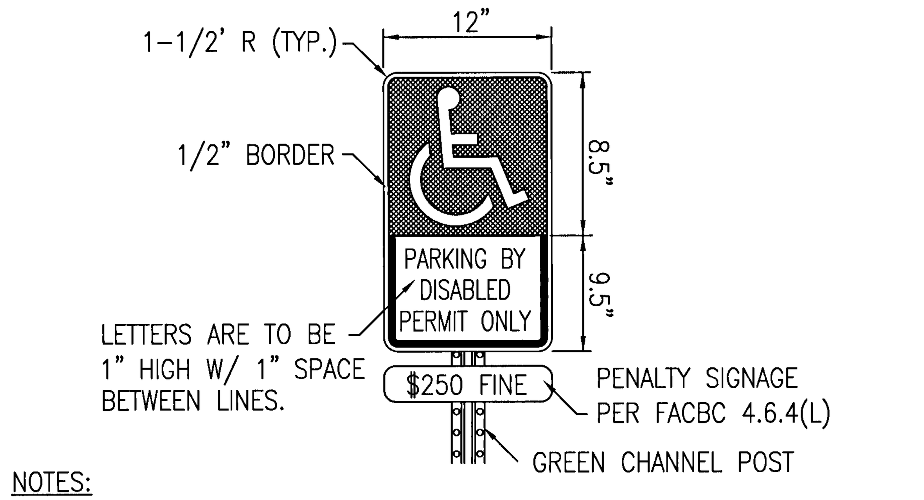

NOTES:
1. TOP PORTION OF SIGN SHALL HAVE A REFLECTIVE BLUE BACKGROUND W/ WHITE REFLECTIVE SYMBOL & BORDER.
2. BOTTOM PORTION SHALL HAVE A REFLECTIVE WHITE BACKGROUND W/ BLACK OPAQUE LEGEND & BORDER.
3. SIGN CAN BE FABRICATED ON ONE PANEL OR TWO
4. SIGNS USED AS PER FLORIDA STATUTES 316.1955 AND 316.1956.
5. THE BOTTOM OF THE SIGN IS TO BE MOUNTED 84" (7') ABOVE GRADE.
6. HANDICAP PARKING SIGNS SHALL CONFORM WITH F.D.O.T. DESIGN STANDARDS PER"ROADWAY AND TRAFFIC DESIGN STANDARDS"

ADA PARKING SIGNAGE (3, C-920)
NOT TO SCALE

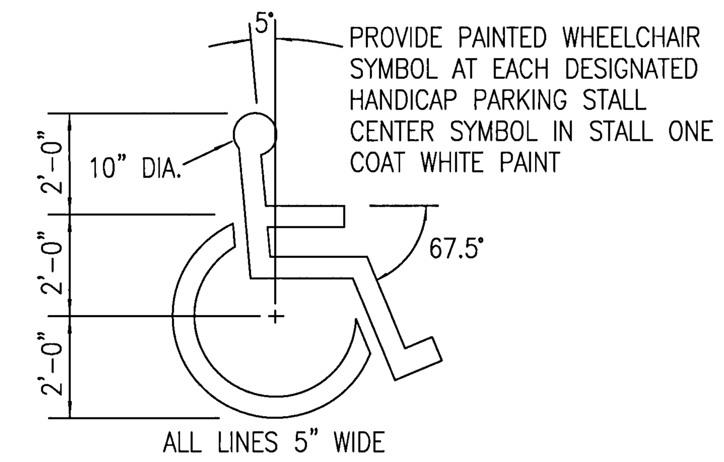

ADA WHEELCHAIR MARKING (4, C-920)
NOT TO SCALE

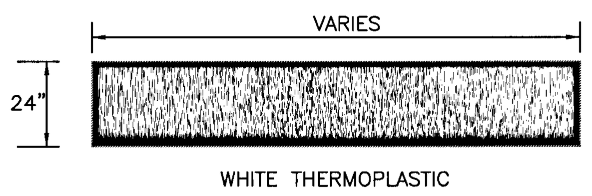

VEHICLE STOP BAR (5, C-920)
NOT TO SCALE

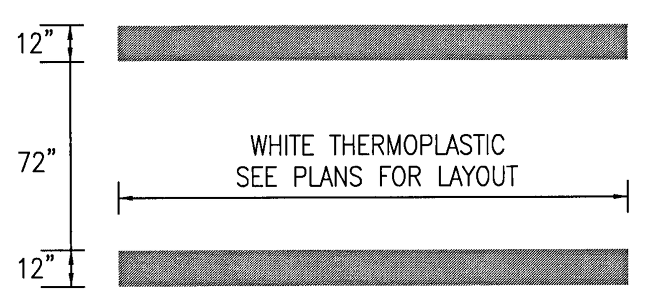

PEDESTRIAN CROSSWALK (6, C-920)
NOT TO SCALE

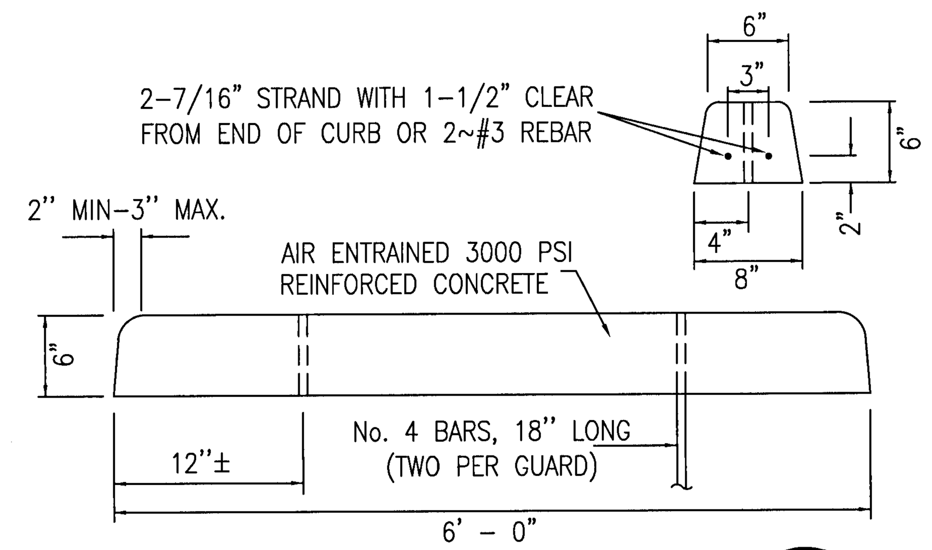

CONCRETE BUMPER BLOCK (7, C-920)
NOT TO SCALE

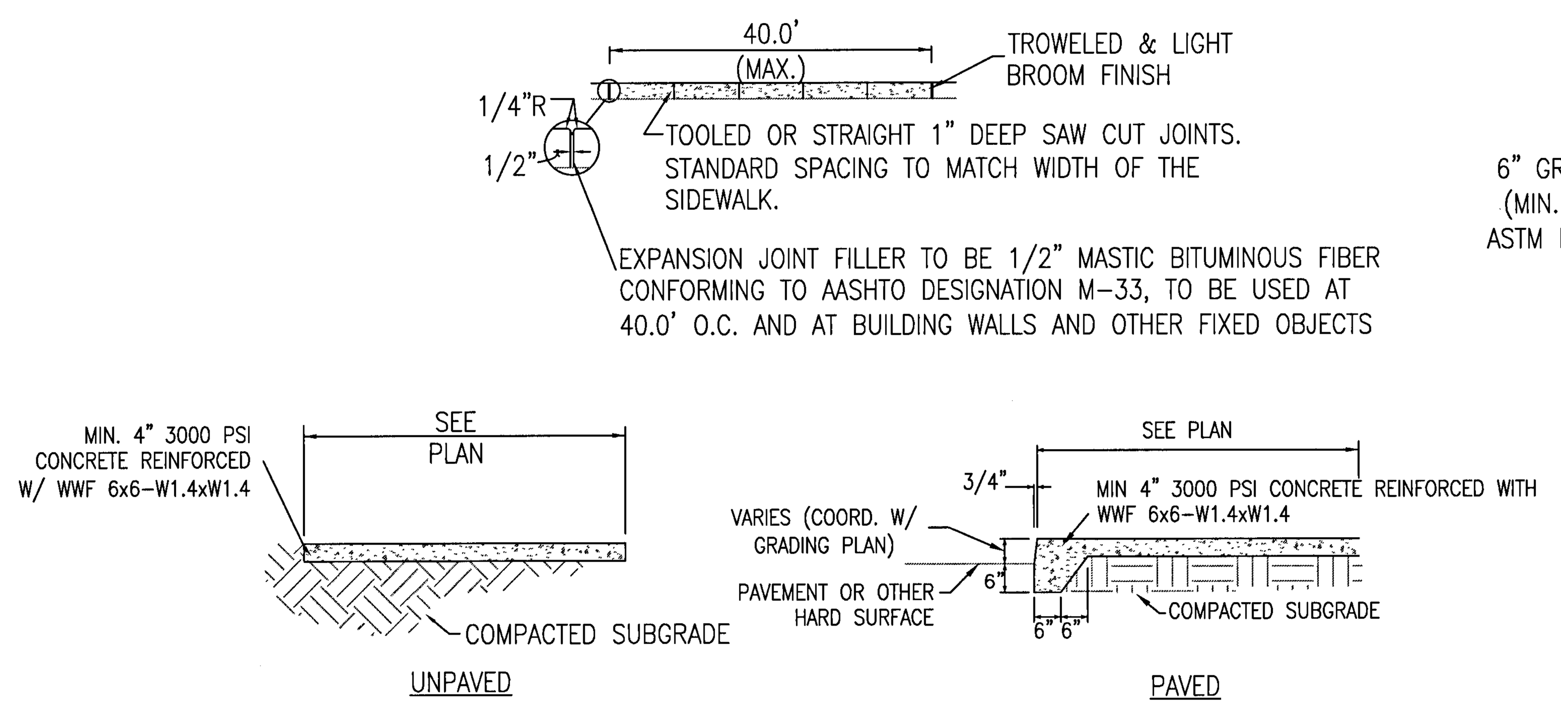

1. MAXIMUM CROSS SLOPE OF 2%.
2. GRADE DROPS ADJACENT TO SIDEWALKS MUST NOT EXCEED 10 INCHES IN THE FIRST 2 FEET.
3. SEE WRITTEN SPECIFICATIONS FOR DETAILED REINFORCEMENT AND JOINT REQUIREMENTS.

CONCRETE SIDEWALK (8, C-920)
NOT TO SCALE

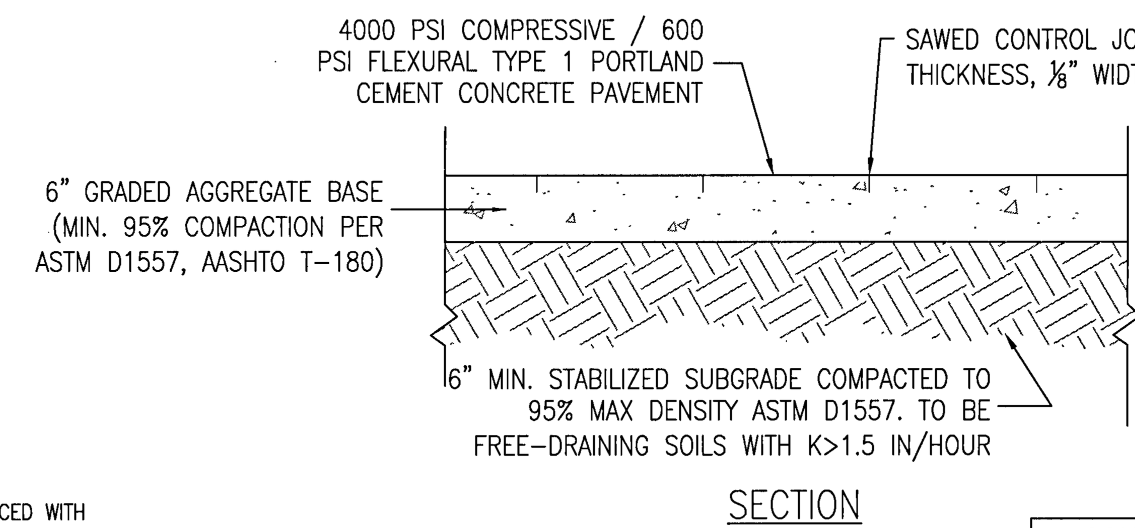

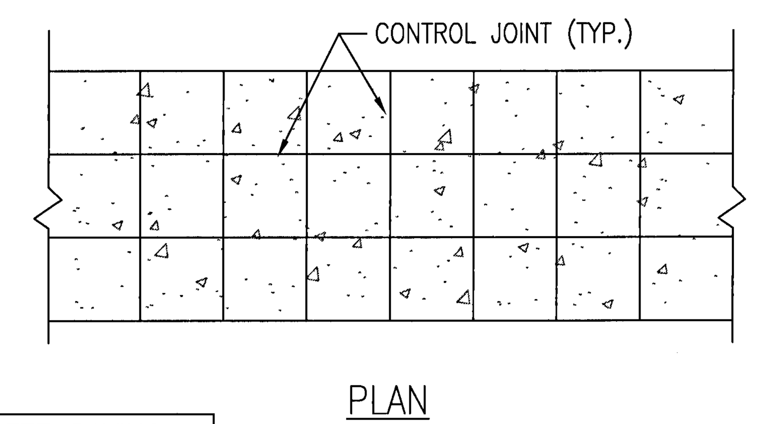

CONCRETE PAVING SECTION SUMMARY	STANDARD DUTY	HEAVY DUTY
CONCRETE THICKNESS	6.0"	8"
CONTROL JOINT MAX. SPACING	10'x10'	20'x20'

NOTES:
1. LONGITUDINAL AND TRANSVERSE JOINTS SHALL BE SAWED AS INDICATED.
2. THE JOINT SEAL MANUFACTURER'S SPECIFICATIONS MUST BE COMPATIBLE WITH THE JOINT CONFIGURATION.
3. CONTRACTOR MUST SUBMIT DETAILED PLAN FOR CONSTRUCTION AND EXPANSION JOINTS FOR ENGINEER'S APPROVAL.
4. FOR ALL JOINTS THE BACKER ROD MATERIAL MUST BE COMPATIBLE WITH THE COLD POURED SEALANT AND SLIGHTLY OVERSIZED TO PREVENT MOVEMENT DURING THE JOINT SEALANT OPERATION.
5. THE WIDTH OF ALL JOINTS MUST BE CORRECTED FOR 68 DEGREE F.
6. EXPANSION JOINTS MUST BE USED AT ALL LOCATIONS WHERE PAVEMENT ABUTS A PERMANENT STRUCTURE, CURB OR OTHER PAVEMENT

CONCRETE PAVING (9, C-920)
NOT TO SCALE

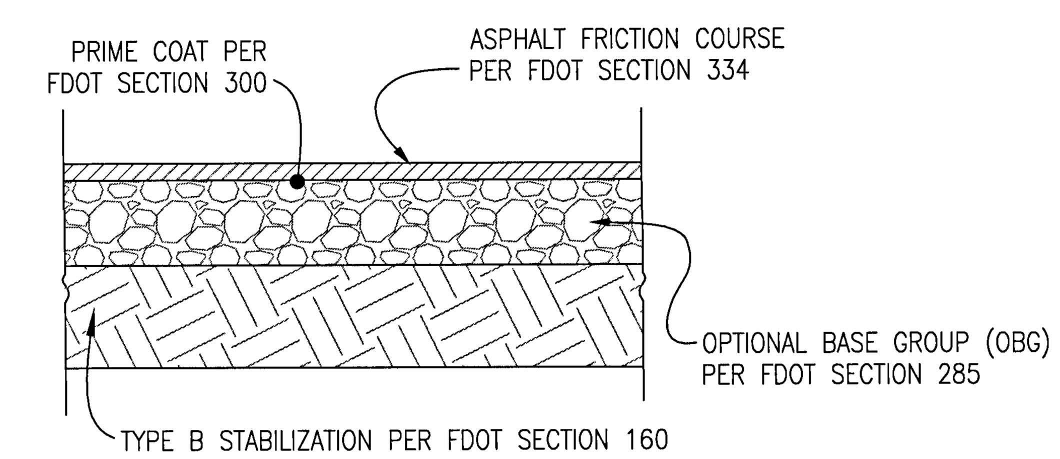

ASPHALT PAVING SECTION THICKNESSES	STANDARD DUTY	HEAVY DUTY
FRICTION COURSE	1.5" SP 12.5	2.0" SP 12.5
BASE	OBG 3	OBG 5
SUBGRADE	12.0"	12.0"

ASPHALT PAVING SECTIONS (10, C-920)
NOT TO SCALE

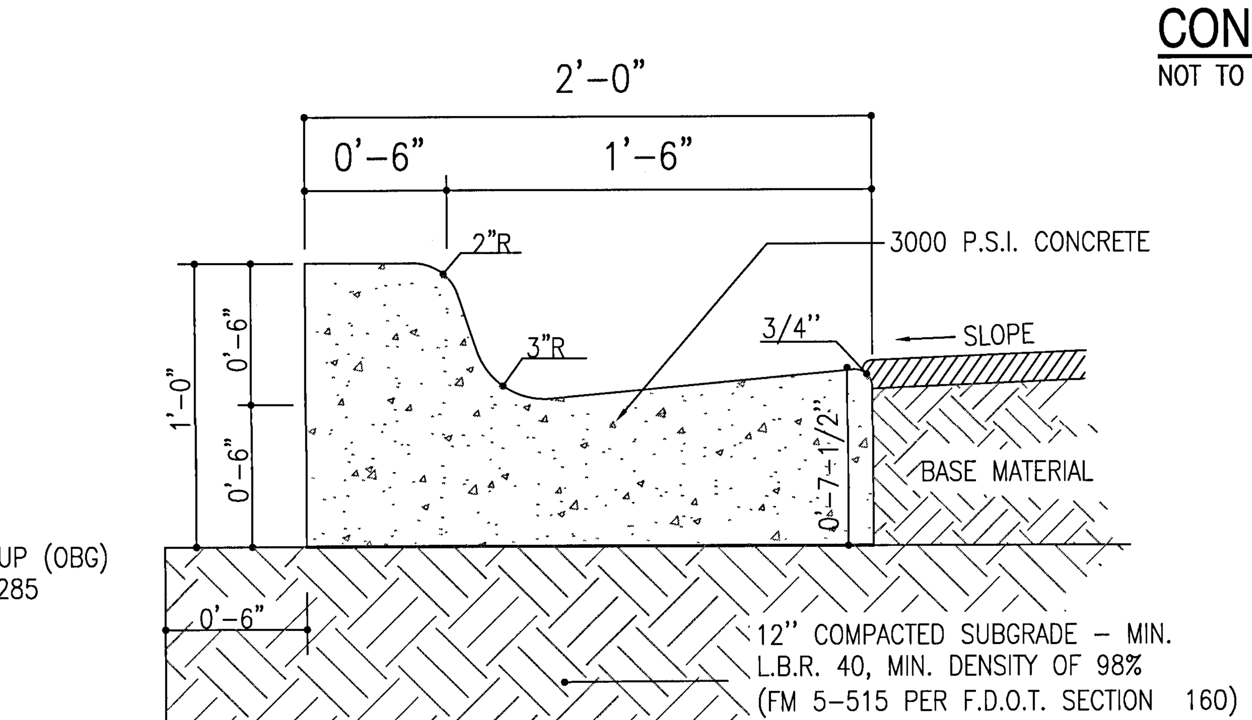

NOTES:
1. WHEN USED ON HIGH SIDES OF GRADES, THE GUTTER MUST SPILL ONTO THE ADJACENT PAVEMENT. THE THICKNESS OF THE LIP MUST BE 6" MIN. AT SUCH LOCATIONS.
2. ALL MATERIALS USED FOR CONCRETE, AND THE DESIGN OF ALL CONCRETE MIXES, SHALL CONFORM WITH THE RECOMMENDATIONS OF THE AMERICAN CONCRETE INSTITUTE (ACI 318). ALL CONCRETE SHALL DEVELOP A 28-DAY COMPRESSIVE STRENGTH OF 3000 PSI. IF ANY CONCRETE SHOULD FAIL TO MEET THE STRENGTH REQUIREMENT THE STRUCTURE SHALL BE REMOVED AS NECESSARY TO REMOVE THE DEFECTIVE CONCRETE AND SHALL THEN BE REBUILT AT THE CONTRACTOR'S EXPENSE.
3. SEE PAVING DETAIL(S) FOR PAVING AND BASE MATERIALS AD THICKNESS AND/OR VARIATIONS TO SUBGRADE PREPARATION.

TYPE 'F' CURB (11, C-920)
NOT TO SCALE

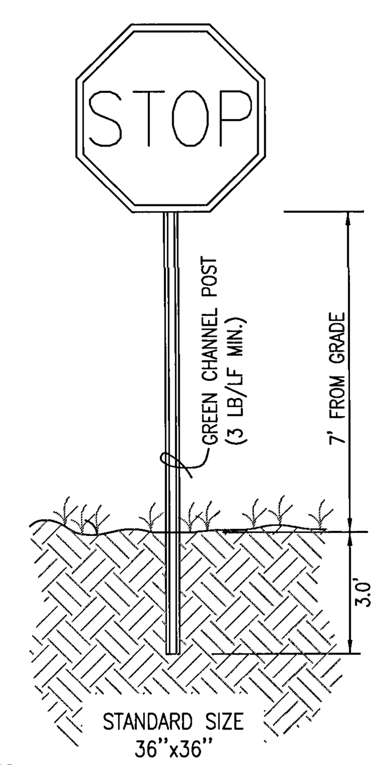

NOTES:
1. SIGNS MUST MEET DESIGN, SIZE & INSTALLATION REQUIREMENTS OF THE MUTCD. (R1-1)

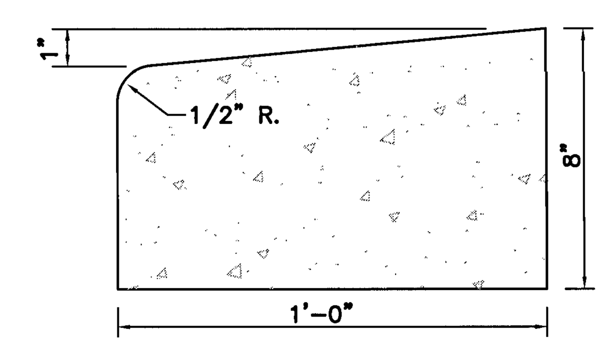

NOTE:
1. ALL CURB TO HAVE DUMMY JOINT AT 10' ON CENTER. MIN. DEPTH OF JOINT TO BE 2".
2. EXPANSION JOINTS ARE TO BE 60' ON CENTER. TYPICAL FOR ALL CURB.
3. CONCRETE TO BE 3000 PSI.

12" RIBBON CURB (13, C-920)
NOT TO SCALE

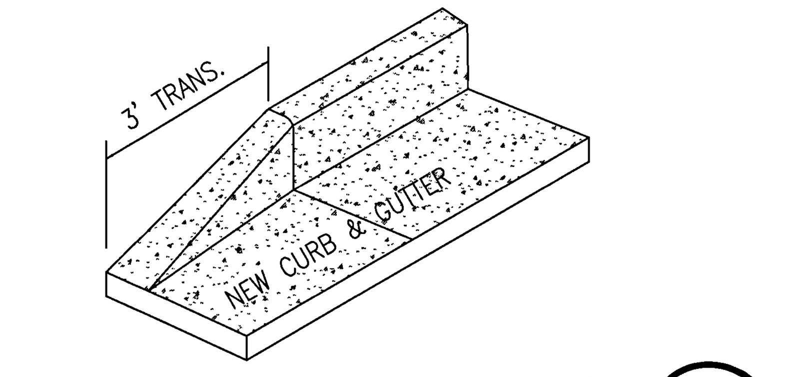

TYPICAL CURB TRANSITION (14, C-920)
NOT TO SCALE

REV.NO.	DESCRIPTION	DATE
-	—	—

REVISIONS

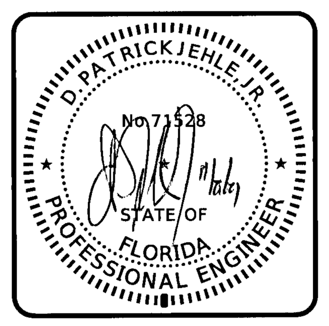

McKIM&CREED
1206 N. Palafox Street
Pensacola, Florida 32501
Phone: (850) 994-9503
CA Lic. No. 29588
www.mckimcreed.com

AERO SPACES HOUSING MULTI-FAMILY

DETAILS
SITE CONSTRUCTION

PROJ. START DATE:	10/7/2021
MCE PROJ. #	08195-0001
DRAWN	CPH
DESIGNED	ALM/DPJ
CHECKED	DPJ
PROJ. MGR.	DPJ

SCALE
HORIZONTAL: AS SHOWN
VERTICAL: N/A

C-920
DRAWING NUMBER
-
REVISION

STATUS: ISSUED FOR PERMIT
NOT FOR CONSTRUCTION

\\MCKIMCREED.COM\NASUNI\DATA\PROJ\08195\0001\ENG\80-DRAWINGS\CIVIL\SOUTH SITE\C-900 DETAILS.DWG 11/19/2021 12:36:58 ALEX MAINIERO

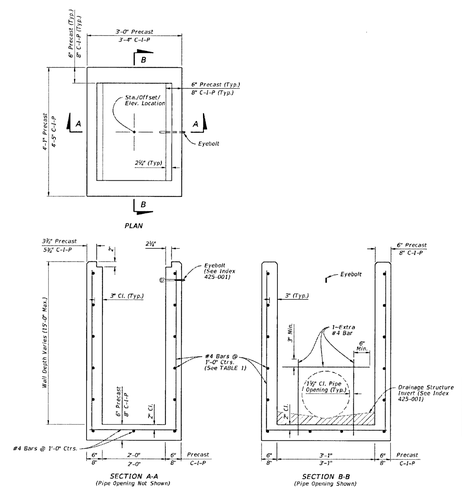

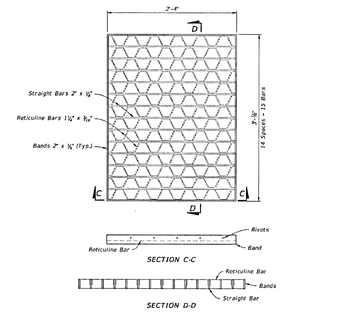

TABLE 1
HORIZONTAL WALL REINFORCING SCHEDULE

WALL DEPTH	SCHEDULE	AREA (IN.²/FT.)	MAX. SPACING	
			BARS	WWF
0' - 15'	A12	0.20	12"	8"

NOTES:

1. Grate, Concrete Apron, and Sod not shown on structure detail.
2. See Sheet 8, 9, and 10 for Concrete Apron and Sodded Area details.

LAST REVISION	REVISION	DESCRIPTION:				
11/01/20			FDOT FY 2021-22 STANDARD PLANS	DITCH BOTTOM INLET TYPE C, D, E, AND H	INDEX 425-052	SHEET 2 of 14

TYPE C - DIMENSIONAL, REINFORCING, AND STEEL GRATE DETAILS

NYLOPLAST TURF TRAFFIC INSTALLATION

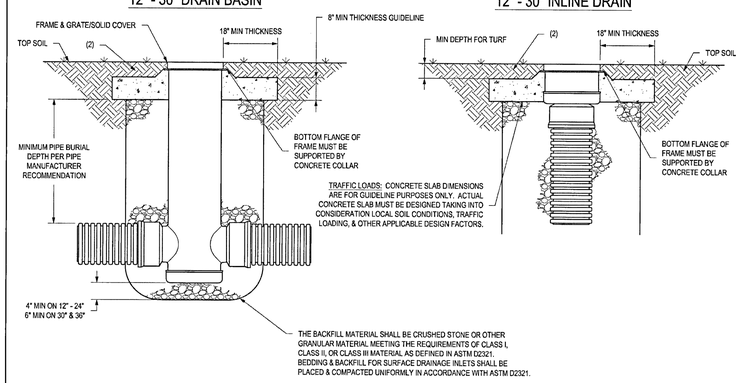

1. GRATES/SOLID COVERS SHALL MEET H-20 LOAD RATING FOR 30' PEDESTRIAN & 12" - 30" STANDARD & SOLID
2. DESIGN SHOULD ACCOUNT FOR ROOT DEPTH TO ALLOW TURF TO GROW AND PREVENT EROSION AROUND GRATE SO THAT HAZARDS DO NOT FORM.

THIS PRINT DISCLOSES SUBJECT MATTER IN WHICH NYLOPLAST HAS PROPRIETARY RIGHTS. THE RECEIPT OR POSSESSION OF THIS PRINT DOES NOT CONFER, TRANSFER, OR LICENSE THE USE OF THE DESIGN OR TECHNICAL INFORMATION SHOWN HEREIN REPRODUCTION OF THIS PRINT OR ANY INFORMATION CONTAINED HEREIN, OR MANUFACTURE OF ANY ARTICLE HEREFROM, FOR THE DISCLOSURE TO OTHERS IS FORBIDDEN, EXCEPT BY SPECIFIC WRITTEN PERMISSION FROM NYLOPLAST. ©2013 NYLOPLAST

DRAWN BY EBC	MATERIAL	Nyloplast 3130 VERONA AVE BUFORD, GA 30518 PHN (770) 932-2443 FAX (770) 932-2490 www.nyloplast-us.com	
DATE 01-05-09		TITLE DRAIN BASIN & INLINE DRAIN TURF TRAFFIC INSTALLATION	
REVISED BY NMH	PROJECT NO./NAME		
DATE 06-12-18			
DWG SIZE A	SCALE 1:25 SHEET 1 OF 1	DWG NO. 7001-110-340	REV G

NYLOPLAST 15" INLINE DRAIN: 2715AG __ X

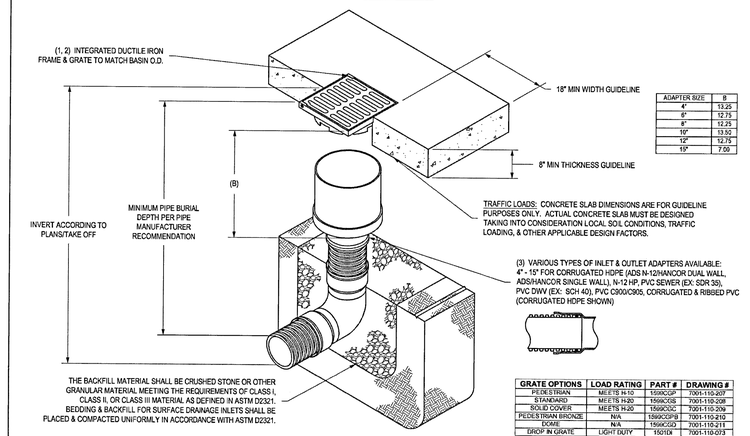

ADAPTER SIZE	B
4"	13.25
6"	12.75
8"	12.25
10"	13.50
12"	12.75
15"	7.00

GRATE OPTIONS	LOAD RATING	PART #	DRAWING #
PEDESTRIAN	MEETS H-10	1599CGP	7001-110-207
STANDARD	MEETS H-20	1599CGS	7001-110-208
SOLID COVER	MEETS H-20	1599CGC	7001-110-209
PEDESTRIAN BRONZE	N/A	1599CGPB	7001-110-210
EGRID	N/A	1599CGG	7001-110-211
DROP IN GRATE	LIGHT DUTY	15D1DI	7001-110-073

1 - GRATES/SOLID COVER SHALL BE DUCTILE IRON PER ASTM A536 GRADE 70-50-05, WITH THE EXCEPTION OF THE BRONZE GRATE.
2 - FRAMES SHALL BE DUCTILE IRON PER ASTM A536 GRADE 70-50-05.
3 - DRAINAGE CONNECTION STUB JOINT TIGHTNESS SHALL CONFORM TO ASTM D3212 FOR CORRUGATED HDPE (ADS N-12/HANCOR DUAL WALL), N-12 HP, & PVC SEWER.
4 - DIMENSIONS ARE FOR REFERENCE ONLY. ACTUAL DIMENSIONS MAY VARY.
5 - DIMENSIONS ARE IN INCHES
6 - SEE DRAWING NO. 7001-110-275 FOR ADS N-12 & HANCOR DUAL WALL BELL INFORMATION & DRAWING NO. 7001-110-364 FOR N-12 HP BELL INFORMATION.

THIS PRINT DISCLOSES SUBJECT MATTER IN WHICH NYLOPLAST HAS PROPRIETARY RIGHTS. THE RECEIPT OR POSSESSION OF THIS PRINT DOES NOT CONFER, TRANSFER, OR LICENSE THE USE OF THE DESIGN OR TECHNICAL INFORMATION SHOWN HEREIN REPRODUCTION OF THIS PRINT OR ANY INFORMATION CONTAINED HEREIN, OR MANUFACTURE OF ANY ARTICLE HEREFROM, FOR THE DISCLOSURE TO OTHERS IS FORBIDDEN, EXCEPT BY SPECIFIC WRITTEN PERMISSION FROM NYLOPLAST. ©2013 NYLOPLAST

DRAWN BY EBC	MATERIAL	Nyloplast 3130 VERONA AVE BUFORD, GA 30518 PHN (770) 932-2443 FAX (770) 932-2490 www.nyloplast-us.com	
DATE 04-03-06		TITLE 15 IN INLINE DRAIN QUICK SPEC INSTALLATION DETAIL	
REVISED BY NMH	PROJECT NO./NAME		
DATE 03-15-18			
DWG SIZE A	SCALE 1:20 SHEET 1 OF 1	DWG NO. 7003-110-028	REV E

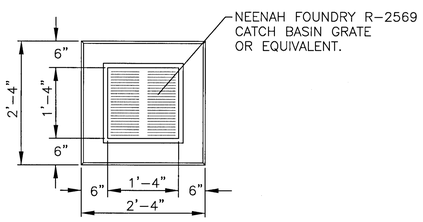

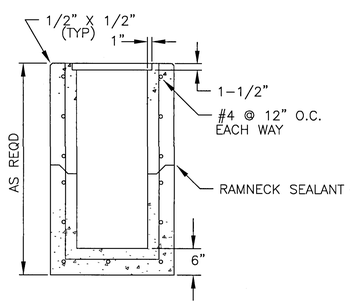

NOTE:
ALL INLETS SHALL HAVE ROLLOCKS POURED IN INLET BOTTOM TO PREVENT PONDING OF WATER.

2x2 YARD INLET (1 / C-930)
NOT TO SCALE

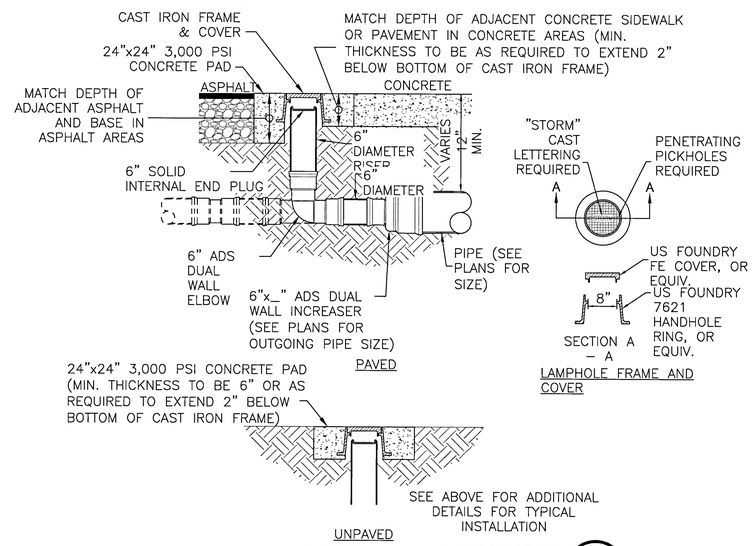

STORM WATER LAMPHOLE (2 / C-930)
NOT TO SCALE

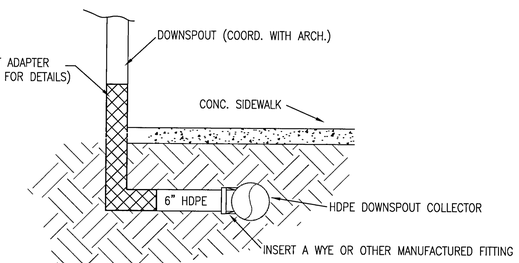

NOTE: SEE ARCH. PLANS FOR EXACT NUMBER AND LOCATION OF DOWNSPOUTS

DOWNSPOUT CONNECTION (3 / C-930)
NOT TO SCALE

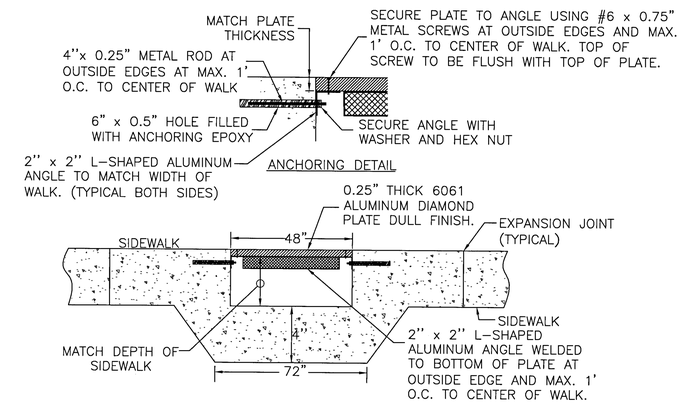

SIDEWALK DRAIN (4 / C-930)
NOT TO SCALE

REV.NO	DESCRIPTION	DATE
-	—	—

REVISIONS

D. PATRICK FEHLER JR. No. 71528 STATE OF FLORIDA PROFESSIONAL ENGINEER

McKIM&CREED
1206 N. Palafox Street
Pensacola, Florida 32501
Phone: (850) 994-9503
CA Lic. No. 29588
www.mckimcreed.com

AERO SPACES HOUSING MULTI-FAMILY

DETAILS

DRAINAGE

PROJ. START DATE:	10/7/2021
MCE PROJ. #	08195-0001
DRAWN	CPH
DESIGNED	ALM/DPJ
CHECKED	DPJ
PROJ. MGR.	DPJ

SCALE
HORIZONTAL: AS SHOWN
VERTICAL: N/A

C-930
DRAWING NUMBER
-
REVISION

STATUS: ISSUED FOR PERMIT
NOT FOR CONSTRUCTION

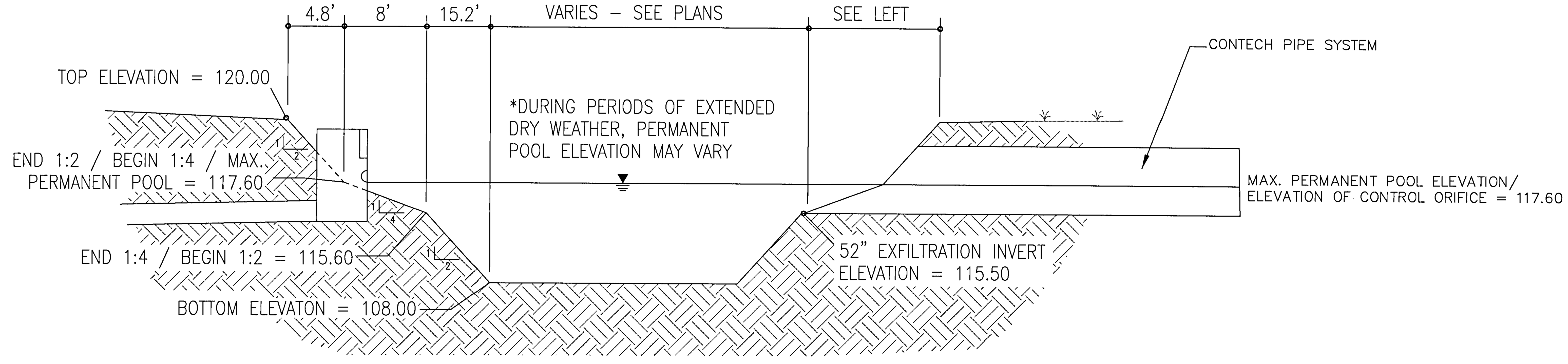

SECTION A

NOTES:

1. PONDS MUST BE SUBSTANTIALLY COMPLETE PRIOR TO ANY CONSTRUCTION ACTIVITIES THAT MAY INCREASE STORM WATER RUNOFF RATES. THE CONTRACTOR MUST CONTROL STORM WATER DURING ALL PHASES OF CONSTRUCTION AND TAKE ADEQUATE MEASURES TO PREVENT THE EXCAVATED POND FROM BLINDING DUE TO SEDIMENTS.
2. SIDES AND BOTTOM OF STORM WATER POND MUST BE IMMEDIATELY STABILIZED UPON CONSTRUCTION.
3. UPON FINAL COMPLETION OF CONSTRUCTION AND STABILIZATION OF ALL UPSTREAM AREAS, POND MUST BE RE-SHAPED AS NECESSARY TO REMOVE ACCUMULATED SEDIMENT AND TO MATCH THE PROPOSED GRADING ON THE PLANS. ALL DISTURBED AREAS MUST BE RE-STABILIZED AND SODDED.
4. POND MUST BE DESIGNED SO THAT THE POND SIDE SLOPE MEASURED BETWEEN THE CONTROL ELEVATION AND TWO FEET BELOW THE CONTROL ELEVATION IS NO STEEPER THAN 4H:1V.

WET RETENTION POND (1 / C-931)
NOT TO SCALE

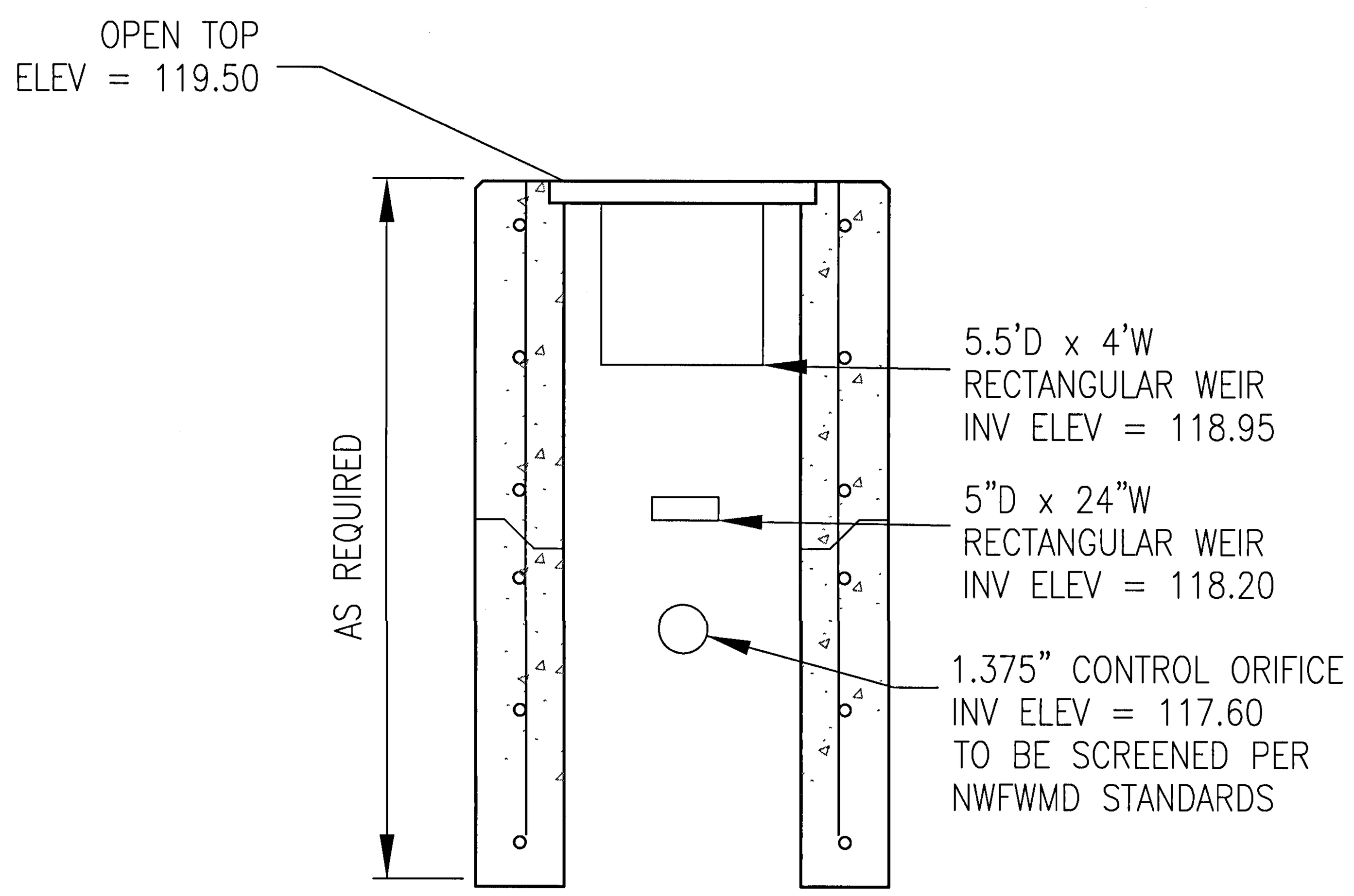

TYPE E CONTROL STRUCTURE (2 / C-931)
NOT TO SCALE

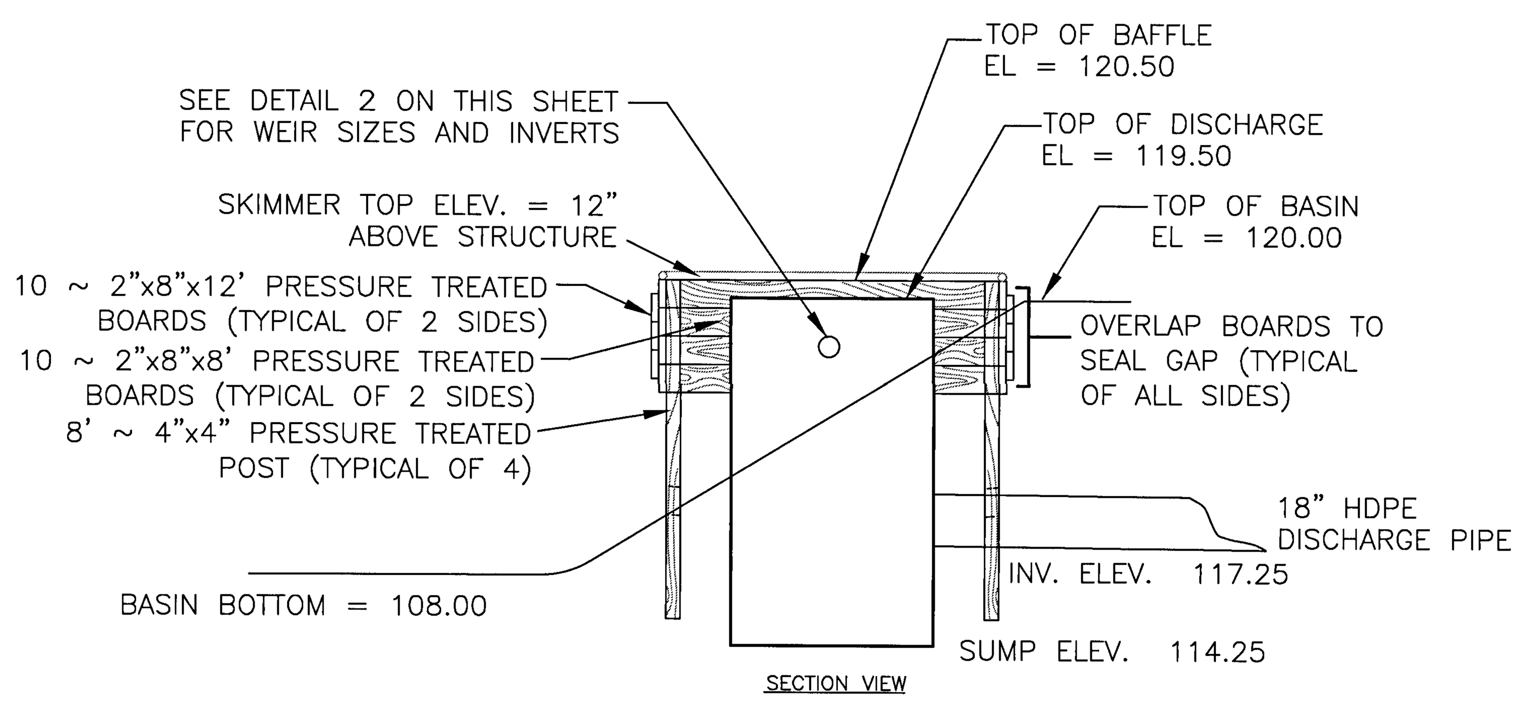

SKIMMER STRUCTURE DETAIL (3 / C-931)
NOT TO SCALE

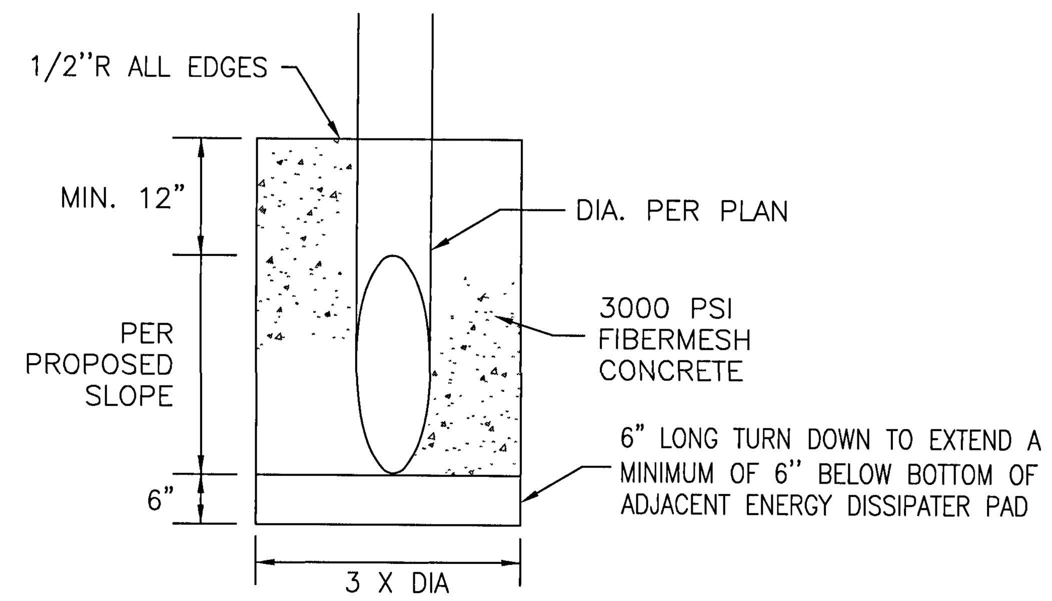

CONCRETE MITERED END SECTION (4 / C-931)
NOT TO SCALE

REV.NO.	DESCRIPTION	DATE
–	–	–

REVISIONS

D. PATRICK JEHLE, JR. No 71328 STATE OF FLORIDA PROFESSIONAL ENGINEER

McKIM&CREED
1206 N. Palafox Street
Pensacola, Florida 32501
Phone: (850) 994-9503
CA Lic. No. 29588
www.mckimcreed.com

AERO SPACES HOUSING MULTI-FAMILY

DETAILS

DRAINAGE

PROJ. START DATE:	10/7/2021
MCE PROJ. #	08195-0001
DRAWN	CPH
DESIGNED	ALM/DPJ
CHECKED	DPJ
PROJ. MGR.	DPJ

SCALE
HORIZONTAL: AS SHOWN
VERTICAL: N/A

C-931
DRAWING NUMBER
–
REVISION

STATUS: ISSUED FOR PERMIT
NOT FOR CONSTRUCTION

PROJECT SUMMARY

CALCULATION DETAILS
- LOADING = HS20 & HS25
- APPROX. LINEAR FOOTAGE = 3,721 lf.

STORAGE SUMMARY
- STORAGE VOLUME REQUIRED = 56,000 cf.
- PIPE STORAGE VOLUME = 54,883 cf.
- BACKFILL STORAGE VOLUME = 0 cf.
- TOTAL STORAGE PROVIDED = 54,883 cf.

PIPE DETAILS
- DIAMETER = 52 IN.
- CORRUGATION = 3x1
- GAGE = 16
- COATING = ALT2
- WALL TYPE = Solid
- BARRELL SPACING = 18 IN.

BACKFILL DETAILS
- WIDTH AT ENDS = 12 IN.
- ABOVE PIPE = 0 IN.
- WIDTH AT SIDES = 12 IN.
- BELOW PIPE = 0 IN.

KEY

PERFORATED

SOLID

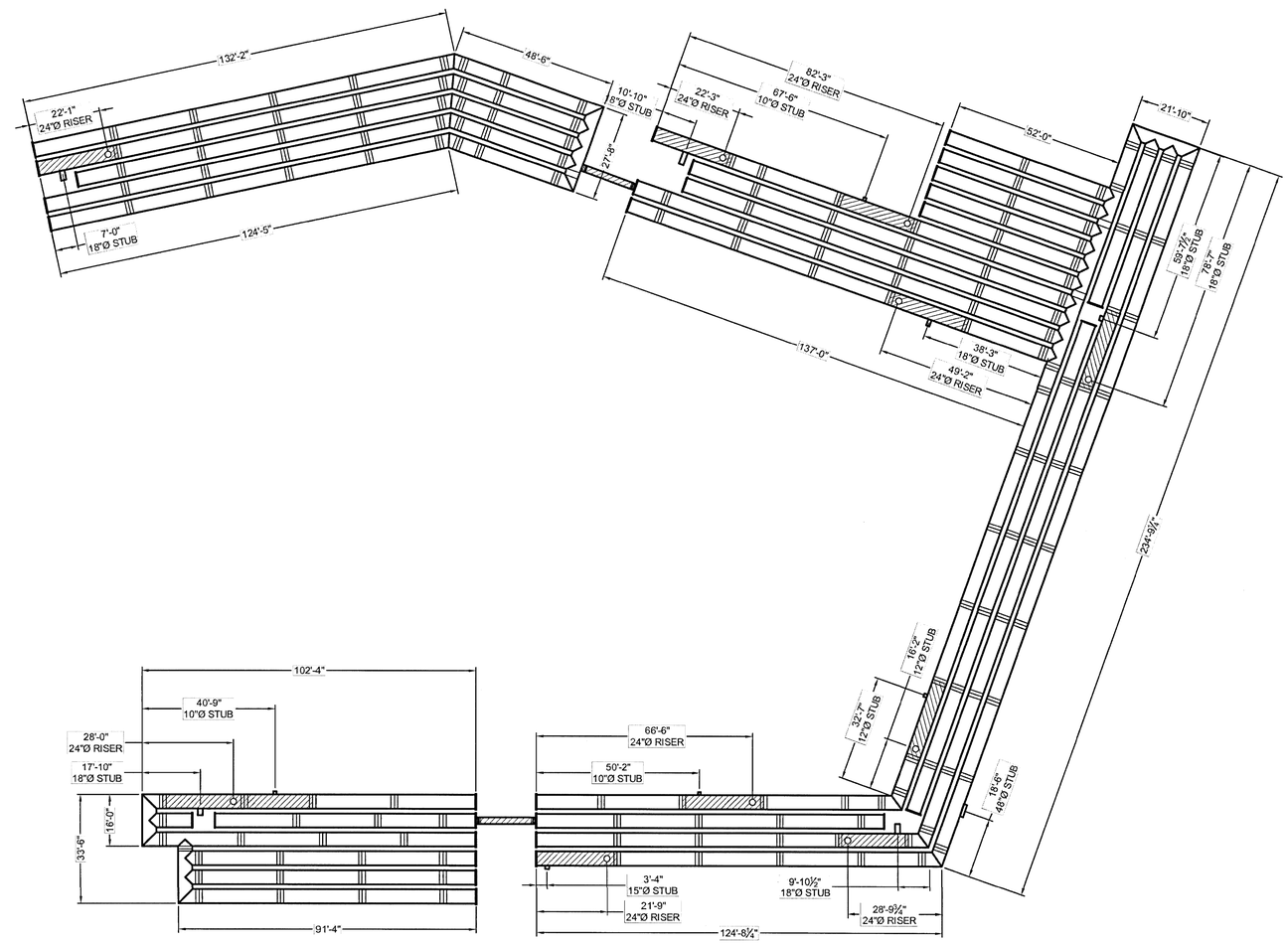

NOTES

- ALL RISER AND STUB DIMENSIONS ARE TO CENTERLINE. ALL ELEVATIONS, DIMENSIONS, AND LOCATIONS OF RISERS AND INLETS, SHALL BE VERIFIED BY THE ENGINEER OF RECORD PRIOR TO RELEASING FOR FABRICATION.
- ALL FITTINGS AND REINFORCEMENT COMPLY WITH ASTM A998.
- ALL RISERS AND STUBS ARE 2⅔" x ½" CORRUGATION AND 16 GAGE UNLESS OTHERWISE NOTED.
- RISERS TO BE FIELD TRIMMED TO GRADE.
- QUANTITY OF PIPE SHOWN DOES NOT PROVIDE EXTRA PIPE FOR CONNECTING THE SYSTEM TO EXISTING PIPE OR DRAINAGE STRUCTURES. OUR SYSTEM AS DETAILED PROVIDES NOMINAL INLET AND/OR OUTLET PIPE STUB FOR CONNECTION TO EXISTING DRAINAGE FACILITIES. IF ADDITIONAL PIPE IS NEEDED IT IS THE RESPONSIBILITY OF THE CONTRACTOR.
- BAND TYPE TO BE DETERMINED UPON FINAL DESIGN.
- THE PROJECT SUMMARY IS REFLECTIVE OF THE DYODS DESIGN, QUANTITIES ARE APPROX. AND SHOULD BE VERIFIED UPON FINAL DESIGN AND APPROVAL. FOR EXAMPLE, TOTAL EXCAVATION DOES NOT CONSIDER ALL VARIABLES SUCH AS SHORING AND ONLY ACCOUNTS FOR MATERIAL WITHIN THE ESTIMATED EXCAVATION FOOTPRINT.
- THESE DRAWINGS ARE FOR CONCEPTUAL PURPOSES AND DO NOT REFLECT ANY LOCAL PREFERENCES OR REGULATIONS. PLEASE CONTACT YOUR LOCAL CONTECH REP FOR MODIFICATIONS.

ASSEMBLY
SCALE: 1" = 40'

I:\MERLIN\PROJECT\ACTIVE\672800\672613\672613-20-CMP DETENTION\DYODS\AEROSPACES MF CMP DYODS.DWG 11/4/2021 2:35 PM

Contech Engineered Solutions LLC ("Contech"). Neither this drawing, nor any part thereof, may be used, reproduced or modified in any manner without the prior written consent of Contech. Failure to comply is done at the user's own risk and Contech expressly disclaims any liability or responsibility for such use.

If discrepancies between the supplied information upon which the drawing is based and actual field conditions are encountered as site work progresses, these discrepancies must be reported to Contech immediately for re-evaluation of the design. Contech accepts no liability for designs based on missing, incomplete or inaccurate information supplied by others.

DATE	REVISION DESCRIPTION	BY

CONTECH®
ENGINEERED SOLUTIONS LLC
www.ContechES.com
9025 Centre Pointe Dr., Suite 400, West Chester, OH 45069
800-338-1122 513-645-7000 513-645-7993 FAX

CONTECH®
CMP DETENTION SYSTEMS

CONTECH
DYODS
DRAWING

52"Ø UNDERGROUND DETENTION SYSTEM
672613-010 AEROSPACES MULTI-FAMILY RESIDENTIAL
PENSACOLA, FL

PROJECT No.: 672613	SEQ. No.: 020
DATE: 11/4/2021	
DESIGNED: DYO	DRAWN: DYO
CHECKED: DYO	APPROVED: DYO
SHEET NO.: D1	

REV.NO.	DESCRIPTION	DATE
-	—	—

REVISIONS

PATRICK J. EHLE
No. 71528
STATE OF FLORIDA
PROFESSIONAL ENGINEER

McKIM&CREED
1206 N. Palafox Street
Pensacola, Florida 32501
Phone: (850) 994-9503

CA Lic. No. 29588
www.mckimcreed.com

AERO SPACES HOUSING MULTI-FAMILY

DETAILS

EXFILTRATION SYSTEM

PROJ. START DATE:	10/7/2021
MCE PROJ. #	08195-0001
DRAWN	CPH
DESIGNED	ALM/DPJ
CHECKED	DPJ
PROJ. MGR.	DPJ

SCALE
HORIZONTAL: AS SHOWN
VERTICAL: N/A

C-932
DRAWING NUMBER

-
REVISION

STATUS: ISSUED FOR PERMIT
NOT FOR CONSTRUCTION

\\MCKIMCREED.COM\NASUNI\DATA\PROJ\08195\0001\ENG\80-DRAWINGS\CIVIL\SOUTH SITE\C-900 DETAILS.DWG 11/19/2021 12:37:14 ALEX MAINIERO

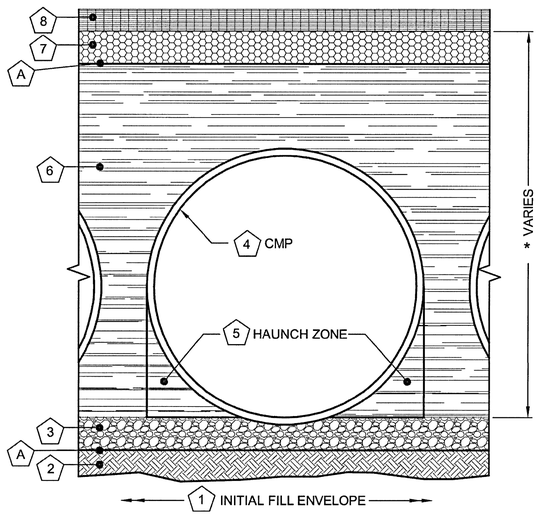

DETENTION SYSTEMS - CMP DETENTION / CMP DRAINAGE

	Material Location	Description	Material Designation	Designation
8	Rigid or Flexible Pavement (if applicable)			
7	Road Base (if applicable)			
A	Geotextile Layer	Non-Woven Geotextile	CONTECH C-40 or C-45	Engineer Decision for consideration to prevent soil migration into varying soil types
6	Backfill	Well graded granular material which may contain small amounts of silt or clay.	AASHTO M 145- A-1, A-2, A-3	Placed in 8" +/- loose lifts and compacted to 90% Standard Proctor Per AASHTO T 99
3	Bedding Stone	Well graded granular bedding material w/maximum particle size of 3"	AASHTO M43 - 3,357,4,467, 5, 56, 57	Engineer to determine if bedding is required. Pipe may be placed on the trench bottom of a relatively loose, native suitable well graded & granular material. For Arch pipes it is recommended to be shaped to a relatively flat bottom or fine-grade the foundation to a slight v-shape. Unsuitable material should be over-excavated and re-placed with a 4"-6" layer of well graded & granular stone per the material designation. See AASHTO 26.3.8.1 / 26.5.3 Bedding info.
A	Geotextile Layer	Non-Woven Geotextile	CONTECH C-40 or C-45	Engineer Decision for consideration to prevent soil migration into varying soil types
*	*Note: Backfill using controlled low-strength material (CLSM, "flash fill" or "flowable fill") when the spacing between the pipes will not allow for placement and adequate compaction of the backfill.*			

1 MINIMUM WIDTH DEPENDS ON SITE CONDITIONS AND ENGINEERING JUDGEMENT

FOUNDATION/BEDDING PREPARATION

2 PRIOR TO PLACING THE BEDDING, THE FOUNDATION MUST BE CONSTRUCTED TO A UNIFORM AND STABLE GRADE. IN THE EVENT THAT UNSUITABLE FOUNDATION MATERIALS ARE ENCOUNTERED DURING EXCAVATION, THEY SHALL BE REMOVED AND BROUGHT BACK TO THE GRADE WITH A FILL MATERIAL AS APPROVED BY THE ENGINEER.

5 HAUNCH ZONE MATERIAL SHALL BE PLACED AND UNIFORMALLY COMPACTED WITHOUT SOFT SPOTS.

BACKFILL

WHEN PLACING THE FIRST LIFTS OF BACKFILL IT IS IMPORTANT TO MAKE SURE THAT THE BACKFILL IS PROPERLY COMPACTED UNDER AND AROUND THE PIPE HAUNCHES. BACKFILL SHALL BE PLACED SUCH THAT THERE IS NO MORE THAN A TWO LIFT (16") DIFFERENTIAL BETWEEN ANY OF THE PIPES AT ANY TIME DURING THE BACKFILL PROCESS. THE BACKFILL SHALL BE ADVANCED ALONG THE LENGTH OF THE DETENTION SYSTEM AT THE SAME RATE TO AVOID DIFFERENTIAL LOADING ON THE PIPE.

OTHER ALTERNATE BACKFILL MATERIAL MAY BE ALLOWED DEPENDING ON SITE SPECIFIC CONDITIONS, AS APPROVED BY SITE ENGINEER.

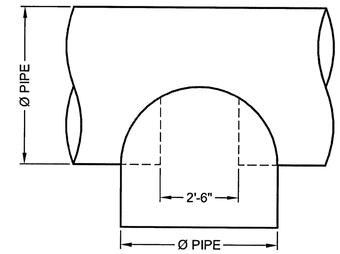

PLAN

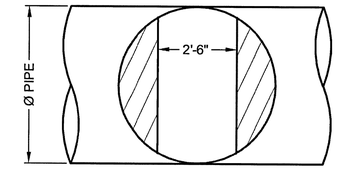

FRONT

NOTE:
MANWAY DETAIL APPLICABLE FOR CMP SYSTEMS WITH DIAMETERS 48" AND LARGER. MANWAYS MAY BE REQUIRED ON SMALLER SYSTEMS DEPENDING ON ACTUAL SITE SPECIFIC CONDITIONS.

TYPICAL MANWAY DETAIL
SCALE: N.T.S.

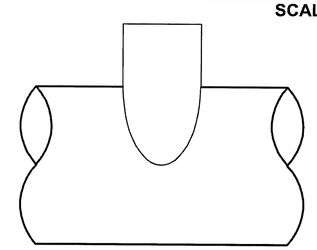

ELEVATION

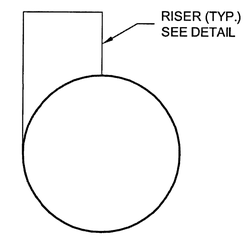

END

NOTE:
LADDERS ARE OPTIONAL AND ARE NOT REQUIRED FOR ALL SYSTEMS.

TYPICAL RISER DETAIL
SCALE: N.T.S.

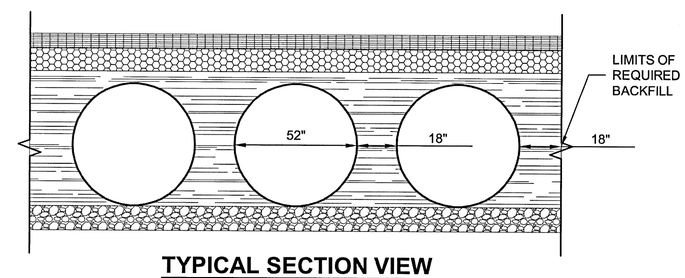

TYPICAL SECTION VIEW
LINER OVER ROWS
SCALE: N.T.S.

I:\MERLIN\PROJECT\ACTIVE\672600\672613\672613-20-CMP DETENTION\DYODS\AEROSPACES MF CMP DYODS B.DWG 11/4/2021 2:36 PM

Contech Engineered Solutions LLC ("Contech"). Neither this drawing, nor any part thereof, may be used, reproduced or modified in any manner without the prior written consent of Contech. Failure to comply is done at the user's own risk and Contech expressly disclaims any liability or responsibility for such use.

If discrepancies between the supplied information upon which the drawing is based and actual field conditions are encountered as site work progresses, these discrepancies must be reported to Contech immediately for re-evaluation of the design. Contech accepts no liability for designs based on missing, incomplete or inaccurate information supplied by others.

DATE	REVISION DESCRIPTION	BY

CONTECH® ENGINEERED SOLUTIONS LLC
www.ContechES.com
9025 Centre Pointe Dr., Suite 400, West Chester, OH 45069
800-338-1122 513-645-7000 513-645-7993 FAX

CONTECH® CMP DETENTION SYSTEMS

CONTECH **DYODS** DRAWING

52"Ø UNDERGROUND DETENTION SYSTEM
672613-010 AEROSPACES MULTI-FAMILY RESIDENTIAL
PENSACOLA, FL

PROJECT No.:	SEQ. No.:	DATE:
672613	020	11/4/2021
DESIGNED: DYO	DRAWN: DYO	
CHECKED: DYO	APPROVED: DYO	
SHEET NO.: D2		

REV.NO.	DESCRIPTION	DATE
-	—	—

REVISIONS

PATRICK JEHLE, JR. No. 71528 STATE OF FLORIDA PROFESSIONAL ENGINEER

McKIM&CREED
1206 N. Palafox Street
Pensacola, Florida 32501
Phone: (850) 994-9503
CA Lic. No. 29588
www.mckimcreed.com

AERO SPACES HOUSING MULTI-FAMILY

DETAILS

EXFILTRATION SYSTEM

PROJ. START DATE:	10/7/2021
MCE PROJ. #	08195-0001
DRAWN	CPH
DESIGNED	ALM/DPJ
CHECKED	DPJ
PROJ. MGR.	DPJ

SCALE
HORIZONTAL: AS SHOWN
VERTICAL: N/A

C-933
DRAWING NUMBER
-
REVISION

STATUS: ISSUED FOR PERMIT
NOT FOR CONSTRUCTION

\\MCKIMCREED.COM\NASUNI\DATA\PROJ\08195\0001\ENG\80-DRAWINGS\CIVIL\SOUTH SITE\C-900 DETAILS.DWG 11/19/2021 12:37:19 ALEX MAINIERO

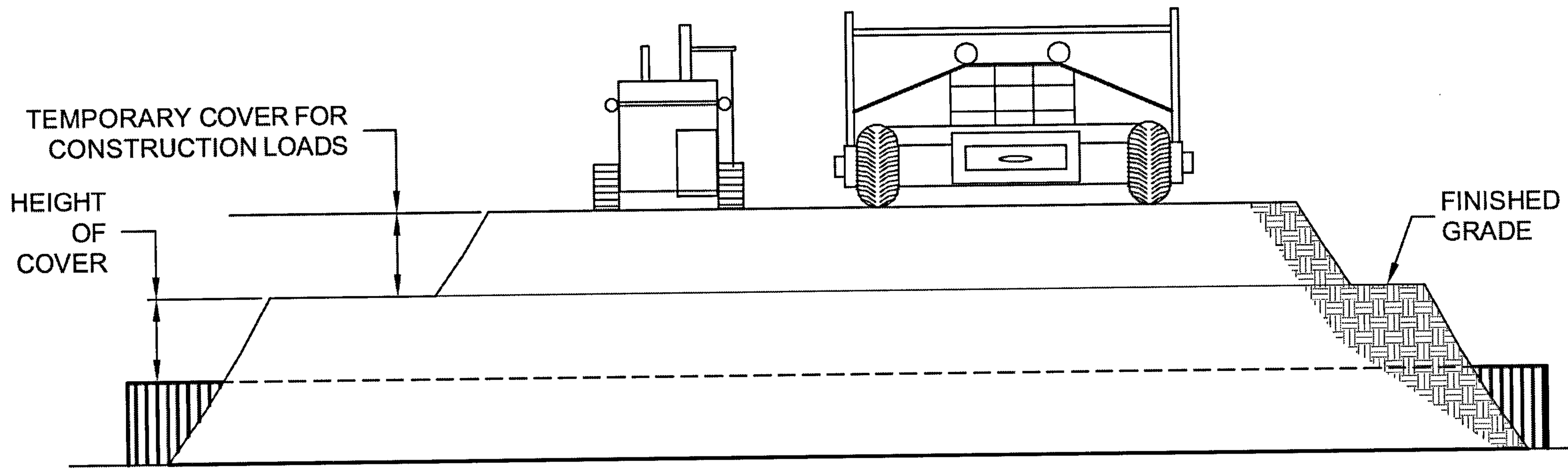

CONSTRUCTION LOADS

FOR TEMPORARY CONSTRUCTION VEHICLE LOADS, AN EXTRA AMOUNT OF COMPACTED COVER MAY BE REQUIRED OVER THE TOP OF THE PIPE. THE HEIGHT-OF-COVER SHALL MEET THE MINIMUM REQUIREMENTS SHOWN IN THE TABLE BELOW. THE USE OF HEAVY CONSTRUCTION EQUIPMENT NECESSITATES GREATER PROTECTION FOR THE PIPE THAN FINISHED GRADE COVER MINIMUMS FOR NORMAL HIGHWAY TRAFFIC.

PIPE SPAN, INCHES	AXLE LOADS (kips)			
	18-50	50-75	75-110	110-150
	MINIMUM COVER (FT)			
12-42	2.0	2.5	3.0	3.0
48-72	3.0	3.0	3.5	4.0
78-120	3.0	3.5	4.0	4.0
126-144	3.5	4.0	4.5	4.5

*MINIMUM COVER MAY VARY, DEPENDING ON LOCAL CONDITIONS. THE CONTRACTOR MUST PROVIDE THE ADDITIONAL COVER REQUIRED TO AVOID DAMAGE TO THE PIPE. MINIMUM COVER IS MEASURED FROM THE TOP OF THE PIPE TO THE TOP OF THE MAINTAINED CONSTRUCTION ROADWAY SURFACE.

CONSTRUCTION LOADING DIAGRAM

SCALE: N.T.S.

SPECIFICATION FOR DESIGNED DETENTION SYSTEM:

SCOPE
THIS SPECIFICATION COVERS THE MANUFACTURE AND INSTALLATION OF THE DESIGNED DETENTION SYSTEM DETAILED IN THE PROJECT PLANS.

MATERIAL
THE MATERIAL SHALL CONFORM TO THE APPLICABLE REQUIREMENTS LISTED BELOW:

ALUMINIZED TYPE 2 STEEL COILS SHALL CONFORM TO THE APPLICABLE REQUIREMENTS OF AASHTO M-274 OR ASTM A-92.

THE GALVANIZED STEEL COILS SHALL CONFORM TO THE APPLICABLE REQUIREMENTS OF AASHTO M-218 OR ASTM A-929.

THE POLYMER COATED STEEL COILS SHALL CONFORM TO THE APPLICABLE REQUIREMENTS OF AASHTO M-246 OR ASTM A-742.

THE ALUMINUM COILS SHALL CONFORM TO THE APPLICABLE REQUIREMENTS OF AASHTO M-197 OR ASTM B-744.

CONSTRUCTION LOADS
CONSTRUCTION LOADS MAY BE HIGHER THAN FINAL LOADS. FOLLOW THE MANUFACTURER'S OR NCSPA GUIDELINES.

PIPE
THE PIPE SHALL BE MANUFACTURED IN ACCORDANCE TO THE APPLICABLE REQUIREMENTS LISTED BELOW:

ALUMINIZED TYPE 2: AASHTO M-36 OR ASTM A-760

GALVANIZED: AASHTO M-36 OR ASTM A-760

POLYMER COATED: AASHTO M-245 OR ASTM A-762

ALUMINUM: AASHTO M-196 OR ASTM B-745

HANDLING AND ASSEMBLY
SHALL BE IN ACCORDANCE WITH NCSP'S (NATIONAL CORRUGATED STEEL PIPE ASSOCIATION) FOR ALUMINIZED TYPE 2, GALVANIZED OR POLYMER COATED STEEL. SHALL BE IN ACCORDANCE WITH THE MANUFACTURER'S RECOMMENDATIONS FOR ALUMINUM PIPE.

INSTALLATION
SHALL BE IN ACCORDANCE WITH AASHTO STANDARD SPECIFICATIONS FOR HIGHWAY BRIDGES, SECTION 26, DIVISION II DIVISION II OR ASTM A-798 (FOR ALUMINIZED TYPE 2, GALVANIZED OR POLYMER COATED STEEL) OR ASTM B-788 (FOR ALUMINUM PIPE) AND IN CONFORMANCE WITH THE PROJECT PLANS AND SPECIFICATIONS. IF THERE ARE ANY INCONSISTENCIES OR CONFLICTS THE CONTRACTOR SHOULD DISCUSS AND RESOLVE WITH THE SITE ENGINEER.

IT IS ALWAYS THE RESPONSIBILITY OF THE CONTRACTOR TO FOLLOW OSHA GUIDELINES FOR SAFE PRACTICES.

NOTE:
THESE DRAWINGS ARE FOR CONCEPTUAL PURPOSES AND DO NOT REFLECT ANY LOCAL PREFERENCES OR REGULATIONS. PLEASE CONTACT YOUR LOCAL CONTECH REP FOR MODIFICATIONS.

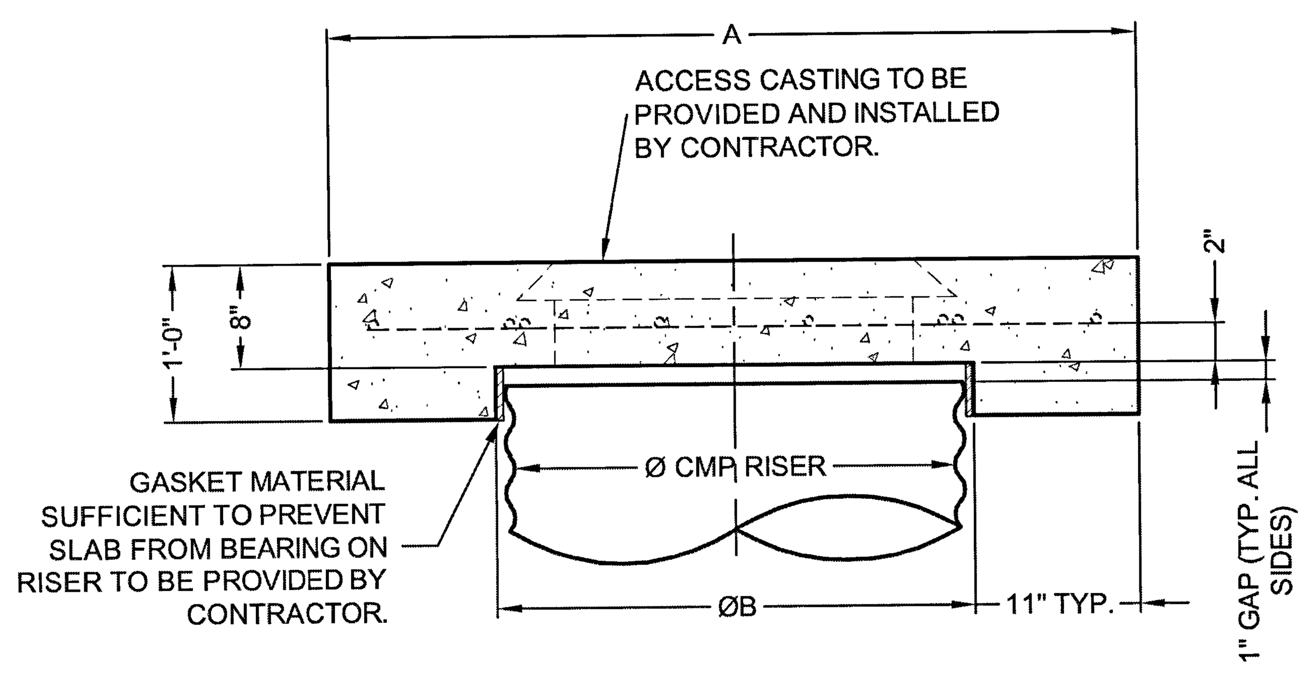

SECTION VIEW

Ø CMP RISER	A	Ø B	REINFORCING	**BEARING PRESSURE (PSF)
24"	Ø 4' 4'X4'	26"	#5 @ 12" OCEW #5 @ 12" OCEW	2,410 1,780
30"	Ø 4'-6" 4'-6" X 4'-6"	32"	#5 @ 12" OCEW #5 @ 12" OCEW	2,120 1,530
36"	Ø 5' 5' X 5'	38"	#5 @ 10" OCEW #5 @ 10" OCEW	1,890 1,350
42"	Ø 5'-6" 5'-6" X 5'-6"	44"	#5 @ 10" OCEW #5 @ 9" OCEW	1,720 1,210
48"	Ø 6' 6' X 6'	50"	#5 @ 9" OCEW #5 @ 8" OCEW	1,600 1,100

REINFORCING TABLE

** ASSUMED SOIL BEARING CAPACITY

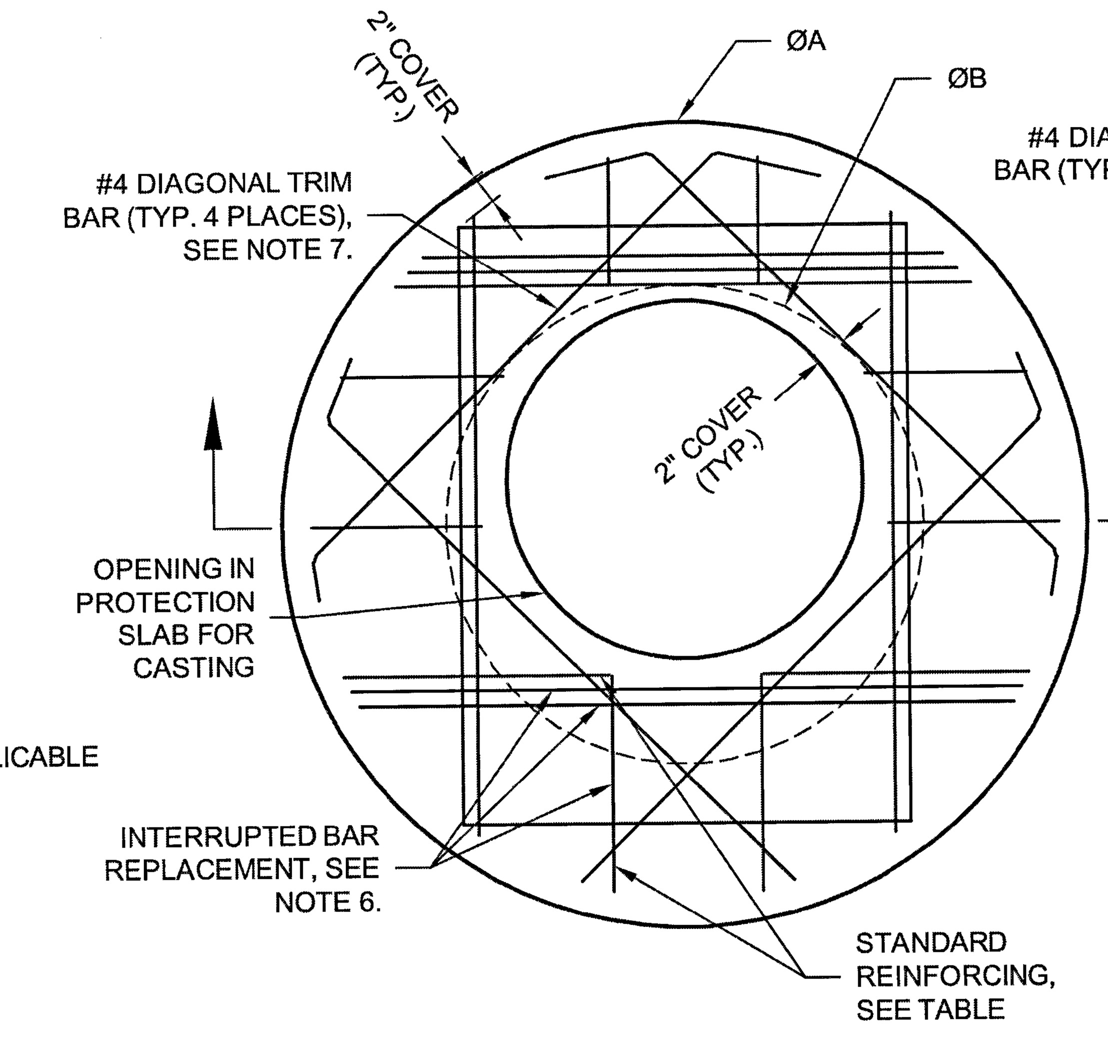

ROUND OPTION PLAN VIEW

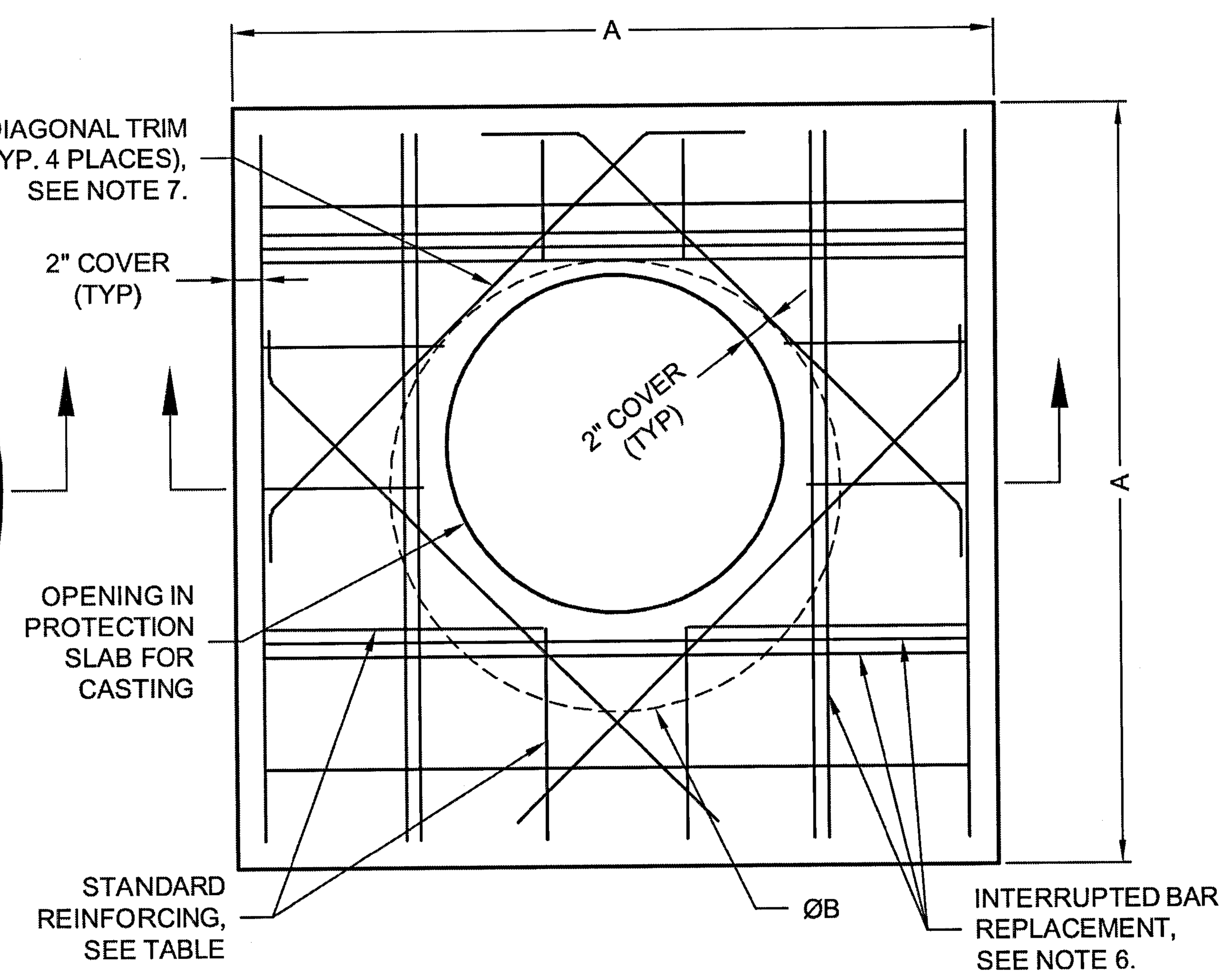

SQUARE OPTION PLAN VIEW

NOTES:

1. DESIGN IN ACCORDANCE WITH AASHTO, 17th EDITION.
2. DESIGN LOAD HS25.
3. EARTH COVER = 1' MAX.
4. CONCRETE STRENGTH = 3,500 psi
5. REINFORCING STEEL = ASTM A615, GRADE 60.
6. PROVIDE ADDITIONAL REINFORCING AROUND OPENINGS EQUAL TO THE BARS INTERRUPTED, HALF EACH SIDE. ADDITIONAL BARS TO BE IN THE SAME PLANE.
7. TRIM OPENING WITH DIAGONAL #4 BARS, EXTEND BARS A MINIMUM OF 12" BEYOND OPENING, BEND BARS AS REQUIRED TO MAINTAIN BAR COVER.
8. PROTECTION SLAB AND ALL MATERIALS TO BE PROVIDED AND INSTALLED BY CONTRACTOR.
9. DETAIL DESIGN BY DELTA ENGINEERING, BINGHAMTON, NY.

MANHOLE CAP DETAIL

SCALE: N.T.S.

I:\MERLIN\PROJECT\ACTIVE\672600\672613\672613-20-CMP DETENTION\DYODS\AEROSPACES MF CMP DYODS B.DWG 11/4/2021 2:37 PM

... Contech Engineered Solutions LLC ("Contech"). Neither this drawing, nor any part thereof, may be used, reproduced or modified in any manner without the prior written consent of Contech. Failure to comply is done at the user's own risk and Contech expressly disclaims any liability or responsibility for such use.

If discrepancies between the supplied information upon which the drawing is based and actual field conditions are encountered as site work progresses, these discrepancies must be reported to Contech immediately for re-evaluation of the design. Contech accepts no liability for designs based on missing, incomplete or inaccurate information supplied by others.

DATE	REVISION DESCRIPTION	BY

CONTECH® ENGINEERED SOLUTIONS LLC
www.ContechES.com
9025 Centre Pointe Dr., Suite 400, West Chester, OH 45069
800-338-1122 513-645-7000 513-645-7993 FAX

CONTECH® CMP DETENTION SYSTEMS
CONTECH DYODS DRAWING

52"Ø UNDERGROUND DETENTION SYSTEM
672613-010 AEROSPACES MULTI-FAMILY RESIDENTIAL
PENSACOLA, FL

PROJECT No.: 672613	SEQ. No.: 020	DATE: 11/4/2021
DESIGNED: DYO	DRAWN: DYO	
CHECKED: DYO	APPROVED: DYO	
SHEET NO.: D3		

REV.NO	DESCRIPTION	DATE

REVISIONS

D. PATRICK JEHLE, JR. No. 71528 STATE OF FLORIDA PROFESSIONAL ENGINEER

McKIM&CREED
1206 N. Palafox Street
Pensacola, Florida 32501
Phone: (850) 994-9503

CA Lic. No. 29588
www.mckimcreed.com

AERO SPACES HOUSING MULTI-FAMILY

DETAILS
EXFILTRATION SYSTEM

PROJ. START DATE:	10/7/2021
MCE PROJ. #	08195-0001
DRAWN	CPH
DESIGNED	ALM/DPJj
CHECKED	DPJj
PROJ. MGR.	DPJj

SCALE
HORIZONTAL: AS SHOWN
VERTICAL: N/A

C-934
DRAWING NUMBER
-
REVISION

STATUS: ISSUED FOR PERMIT NOT FOR CONSTRUCTION

\\MCKIMCREED.COM\NASUNI\DATA\PROJ\08195\0001\ENG\80-DRAWINGS\CIVIL\SOUTH SITE\C-900 DETAILS.DWG 11/19/2021 12:37:23 ALEX MAINIERO

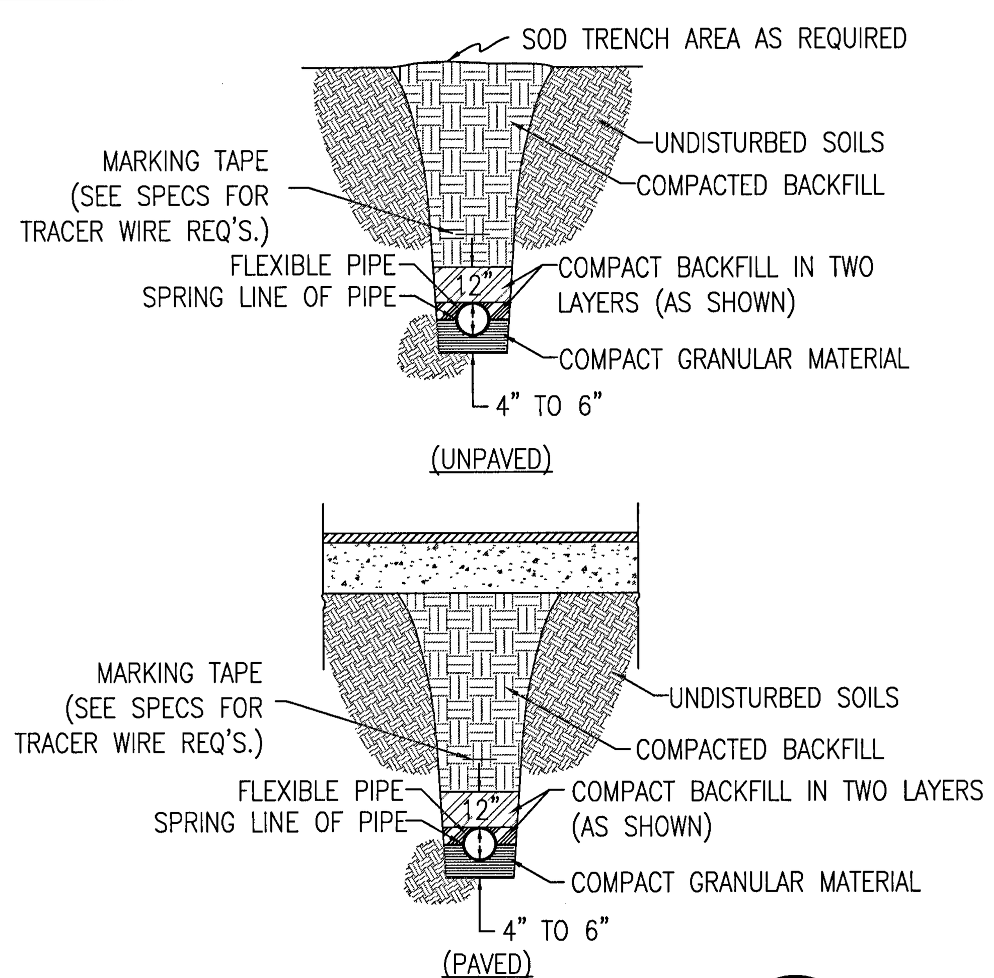

TYPICAL PIPE BEDDING (1 / C-940)
NOT TO SCALE

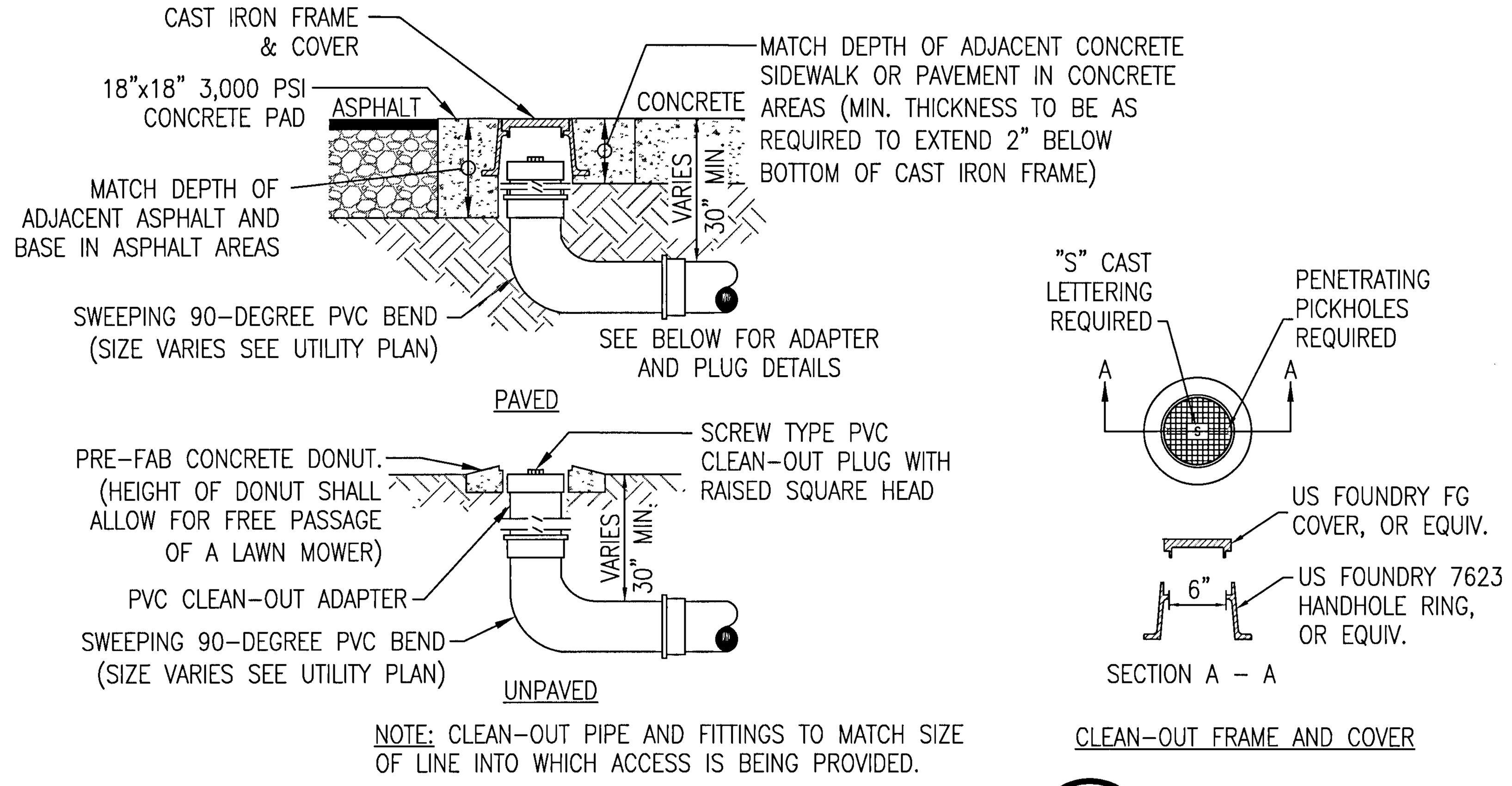

NOTE: CLEAN-OUT PIPE AND FITTINGS TO MATCH SIZE OF LINE INTO WHICH ACCESS IS BEING PROVIDED.

SANITARY CLEAN-OUT (2 / C-940)
NOT TO SCALE

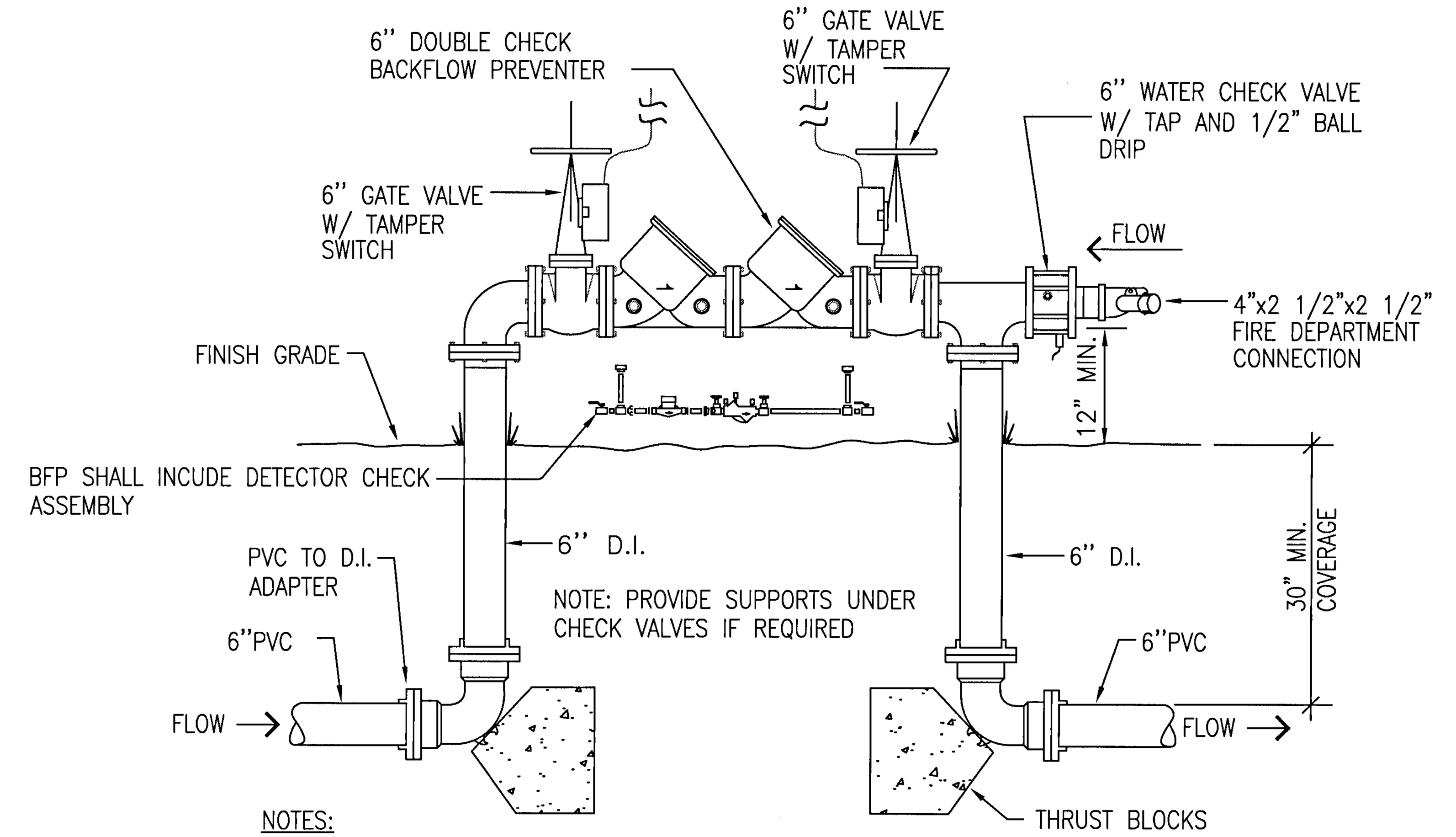

NOTES:
1. BFP TO BE INSTALLED WITHIN A REINFORCED CONCRETE PAD. PAD DIMENSIONS TO EXTEND A MIN. 24" BEYOND LIMITS OF ALL ABOVE-GRADE PIPING AND APPURTENANCES.
2. ALL ABOVE-GRADE PIPING, AND APPURTENANCES TO BE FOAM INSULATED. COORDINATE COLOR OF INSULATION WITH OWNER PRIOR TO INSTALLATION.
3. BFP TO BE TESTED AFTER INSTALLATION AND PRIOR TO SERVICE BEING TURNED ON.

DOUBLE CHECK BACKFLOW PREVENTER (3 / C-940)
NOT TO SCALE

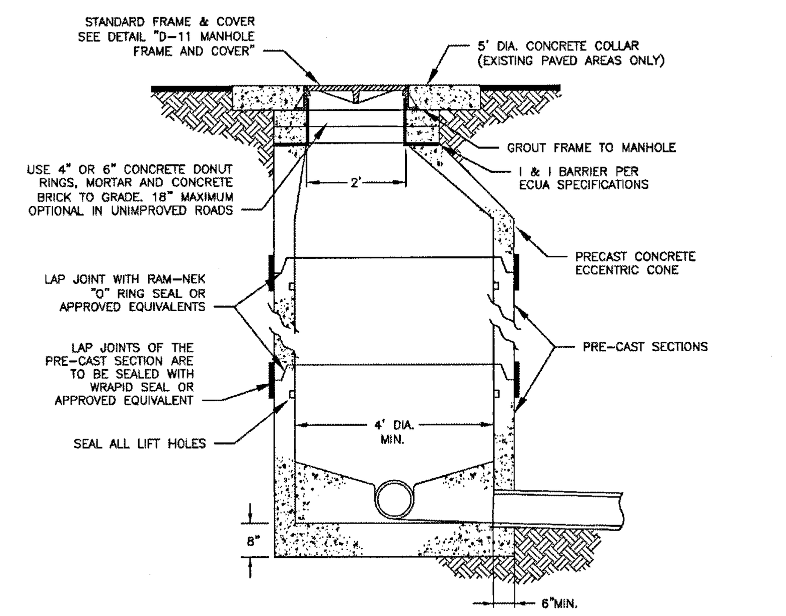

NOTES:
1. SEE SECTION 2570 FOR COMPLETE SPECIFICATIONS.
2. VACUUM TEST TO BE COMPLETED IN ACCORDANCE WITH ASTM C-1244 AND PERFORMED PRIOR TO BACKFILLING.
3. SUPPORTING SOILS UNDER THE BASE OF THE MANHOLE SHALL BE COMPACTED TO AT LEAST 98% OF MAXIMUM DENSITY.
4. JOINT SEALING WRAP SHALL BE INSTALLED ON ALL NEW MANHOLES. RISER SECTION SHALL ONLY BE WRAPPED WHEN MANHOLE IS LOCATED IN LOW AREAS OR AS DEEMED NECESSARY BY ENGINEER.

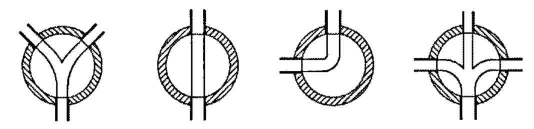

TYPICAL INVERT CHANNELS

ECUA — EMERALD COAST UTILITIES AUTHORITY | SCALE: N.T.S. | STANDARD MANHOLE | DETAIL D-10

STANDARD MANHOLE DETAIL (4 / C-940)
NOT TO SCALE

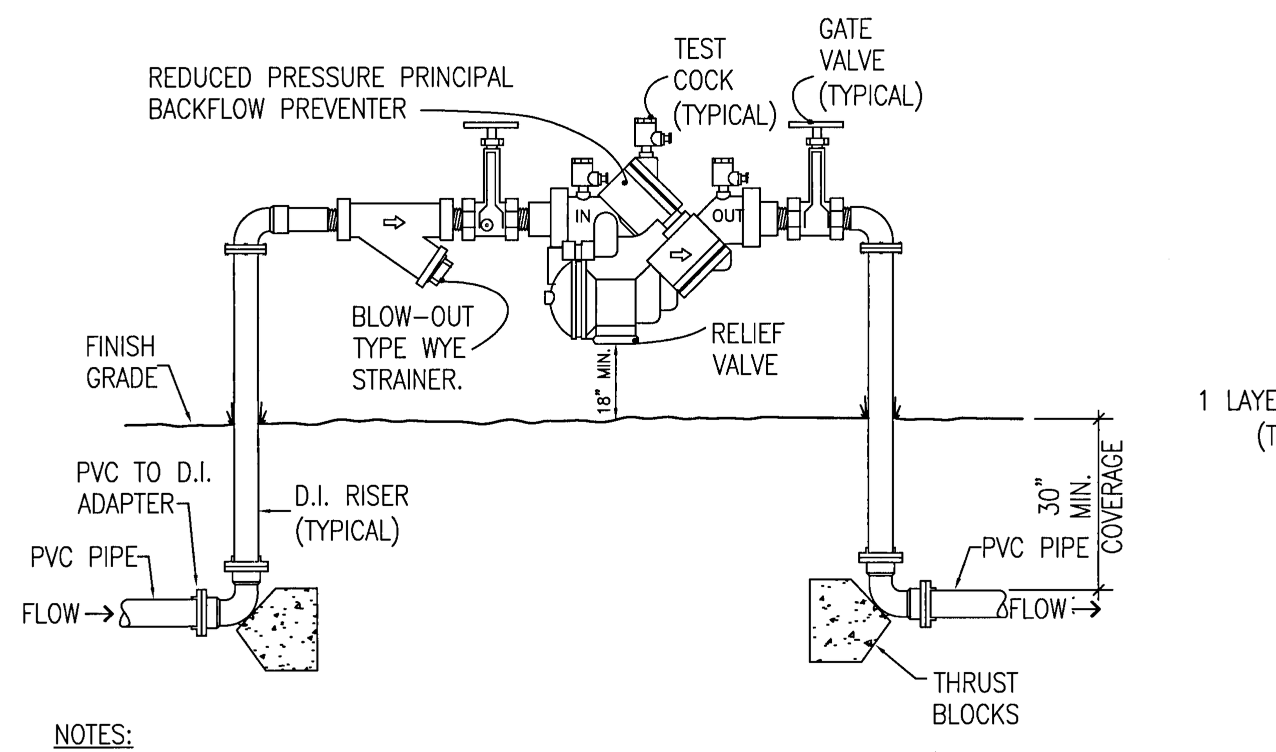

NOTES:
1. BFP TO BE INSTALLED WITHIN A REINFORCED CONCRETE PAD, SEE 7/C012. PAD DIMENSIONS TO EXTEND A MIN. 24" BEYOND LIMITS OF ALL ABOVE-GRADE PIPING AND APPURTENANCES.
2. ALL ABOVE-GRADE PIPING AND APPURTENANCES TO BE FOAM INSULATED. COORDINATE COLOR OF INSULATION WITH OWNER PRIOR TO INSTALLATION.

REDUCED PRESSURE ZONE BACKFLOW PREVENTER (5 / C-940)
NOT TO SCALE

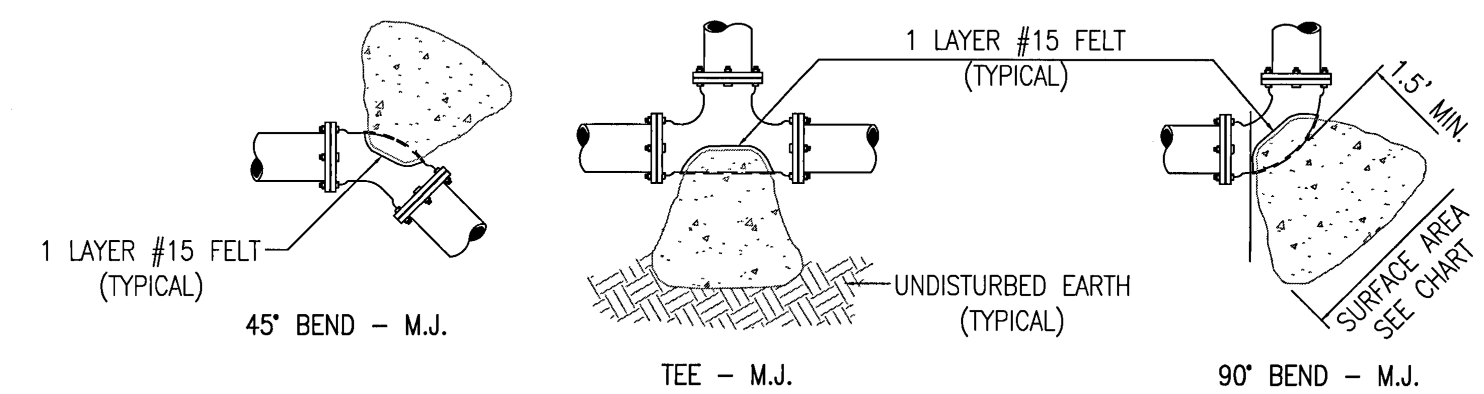

MINIMUM THRUST BLOCK DIMENSIONS: SURFACE AREA AGAINST UNDISTURBED SOIL

PIPE SIZE \ FITTING	DEAD END OR TEE	90° BEND	45° BEND	22.5° BEND
4"	1' X 2'	1.5' X 1.5'	1' X 1.5'	1' X 1'
6"	2' X 2'	2.5' X 2.5'	2' X 1.5'	1' X 1.5'

NOTES:
1. ONE LAYER OF #15 FELT TO BE USED TO PREVENT ADHESION OF CONCRETE TO FITTING.
2. ALL THRUST BLOCKS TO BE BACKED BY UNDISTURBED SOIL.
3. THRUST BLOCK DIMENSIONS BASED ON SM SOIL CLASSIFICATION.
4. CONCRETE MIN. 2,500 PSI.
5. JOINT RESTRAINTS ARE TO BE USED ON ALL FITTINGS. THRUST BLOCKS REQUIRED ON 90° BENDS, 45° BENDS, TEES, TAPPING SLEEVES, AND DEAD ENDS.

THRUST BLOCKS (6 / C-940)
NOT TO SCALE

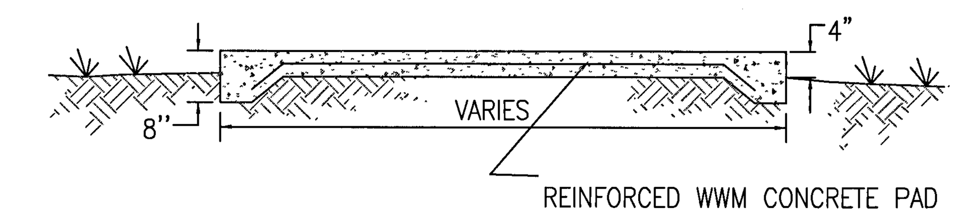

BACKFLOW PREVENTER PAD (7 / C-940)
NOT TO SCALE

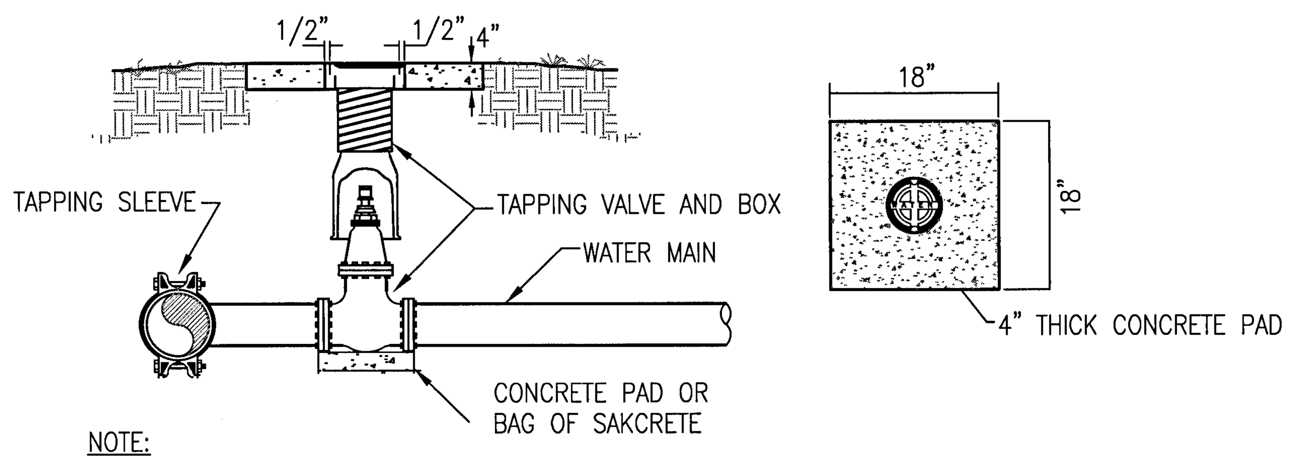

NOTE:
PROVIDE THRUST BLOCKS (NOT SHOWN) AS DETAILED AND SPECIFIED.

TAPPING SLEEVE AND VALVE (8 / C-940)
NOT TO SCALE

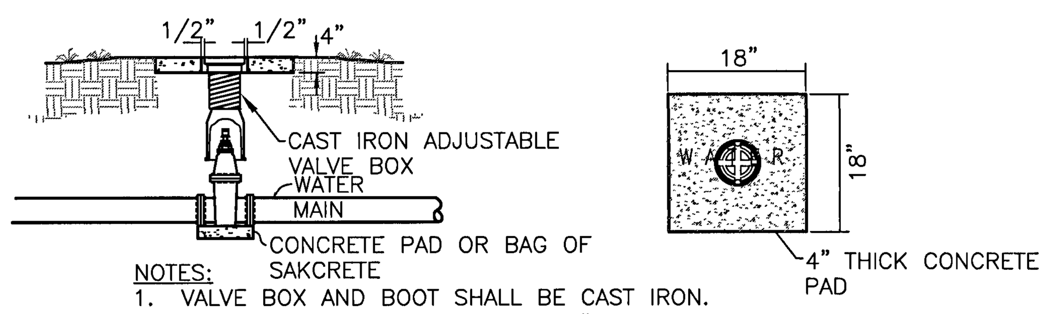

NOTES:
1. VALVE BOX AND BOOT SHALL BE CAST IRON.
2. VALVE COVER SHALL BE MARKED "WATER.
3. VALVE TOP SHALL BE FLUSH WITH FINISHED GRADE OF NATURAL GROUND.
4. GATE VALVE SHALL BE RESILIENT SEATED VALVE WITH RING-TITE ENDS
5. EARTH UNDER FLANGE TO BE FIRM AND WELL TAMPED TO INSURE AGAINST VALVE BOX SETTING.

VALVE AND BOX (9 / C-940)
NOT TO SCALE

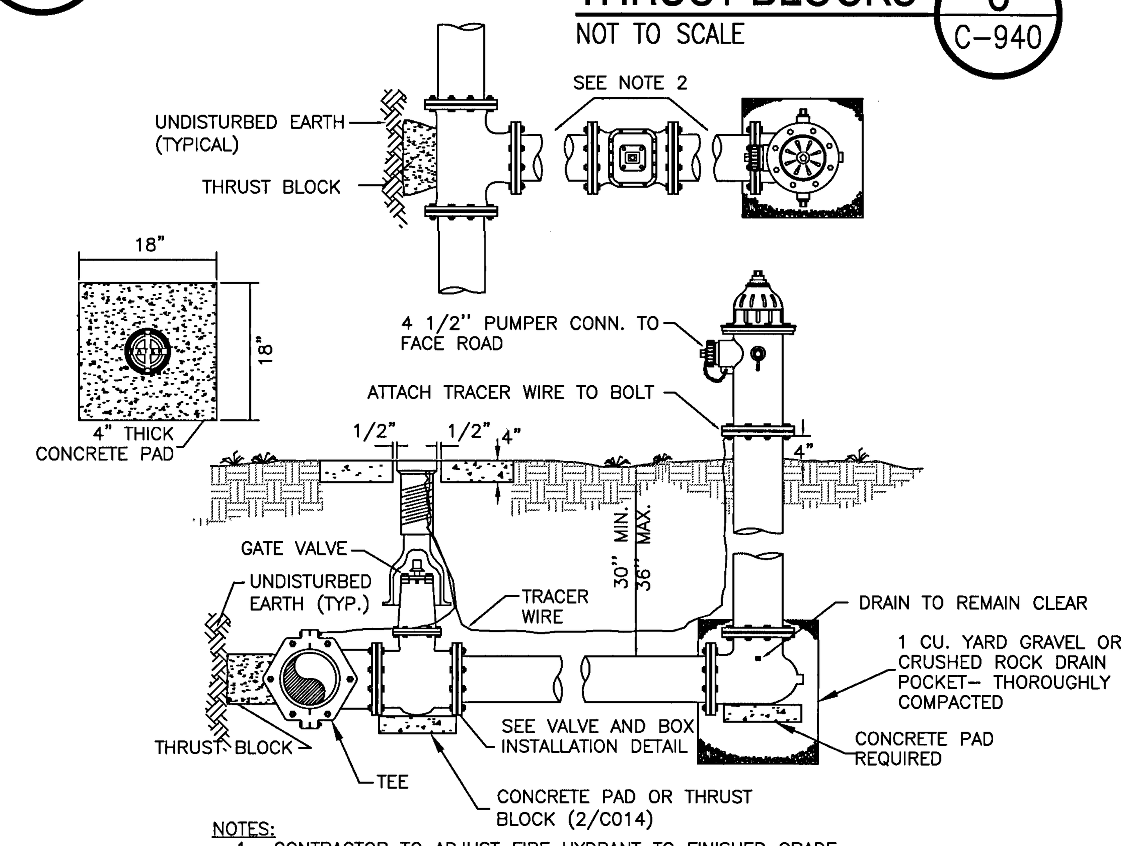

NOTES:
1. CONTRACTOR TO ADJUST FIRE HYDRANT TO FINISHED GRADE.
2. HYDRANT CONNECTORS OR D.I.P. SPOOLS WITH MEGALUG JOINT RESTRAINTS.
3. HYDRANT BODY TO BE RED IN COLOR.

FIRE HYDRANT ASSBEBLY (10 / C-940)
NOT TO SCALE

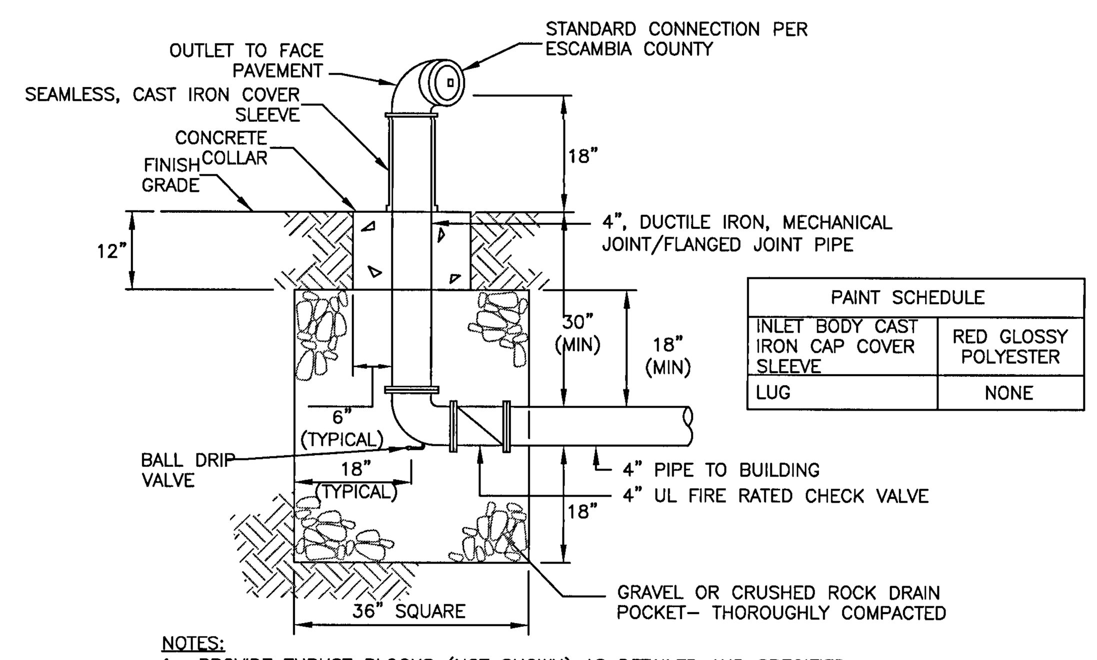

PAINT SCHEDULE	
INLET BODY CAST IRON CAP COVER SLEEVE	RED GLOSSY POLYESTER
LUG	NONE

NOTES:
1. PROVIDE THRUST BLOCKS (NOT SHOWN) AS DETAILED AND SPECIFIED.

FREE STANDING FIRE DEPT. CONN. (11 / C-940)
NOT TO SCALE

REV.NO.	DESCRIPTION	DATE
-	—	—

REVISIONS

D. PATRICK JEHLE JR. No. 71528 STATE OF FLORIDA PROFESSIONAL ENGINEER

McKIM&CREED
1206 N. Palafox Street
Pensacola, Florida 32501
Phone: (850) 994-9503
CA Lic. No. 29588
www.mckimcreed.com

AERO SPACES HOUSING MULTI-FAMILY

DETAILS
UTILITIES

PROJ. START DATE:	10/7/2021
MCE PROJ. #	08195-0001
DRAWN	CPH
DESIGNED	ALM/DPJj
CHECKED	DPJj
PROJ. MGR.	DPJj

SCALE
HORIZONTAL: AS SHOWN
VERTICAL: N/A

C-940
DRAWING NUMBER
-
REVISION

STATUS: ISSUED FOR PERMIT NOT FOR CONSTRUCTION