BOARD OF COUNTY COMMISSIONERS
ESCAMBIA COUNTY, FLORIDA
PUBLIC WORKS BUREAU
ENGINEERING DIVISION

INDEX OF ROADWAY PLANS

SHEET NO.	SHEET DESCRIPTION
1	KEY SHEET
2	SUMMARY OF PAY ITEMS
3	DRAINAGE MAP
4	TYPICAL SECTIONS
5	TYPICAL SECTION DETAILS
6	PROJECT LAYOUT
7	PROJECT NOTES
8 - 12	PLAN AND PROFILES
13	WEIR AND GRADING PLAN
14 - 27	CROSS SECTIONS
28 - 30	EROSION CONTROL PLANS
31-32	TEMPORARY TRAFFIC CONTROL PLANS
33-35	UTILITY ADJUSTMENT PLANS
T-001	SIGNALIZATION PLAN
T-002	MAST ARM TABULATION
T-003	MAST ARM TABLE OF VARIABLES
S-001	STRUCTURAL GENERAL NOTES
S-002	HEADWALL PLAN AND ELEVATION -LAKE JOANNE DRIVE
S-003	HEADWALL PLAN AND ELEVATION-61ST ST AND HWY 98
S-004	HEADWALL DETAILS
S-005	WEIR PLAN AND DETAILS-LAKE JOANNE DRIVE
S-006	SHEET PILE WALL PLAN-LAKE JOANNE DRIVE
S-007	TYPICAL RIPRAP DETAILS
S-008	SHEET PILE DETAILS-LAKE JOANNE DRIVE
S-009	REINFORCING BAR LIST

PROJECT NO.
PD 13-14.081

THESE PLANS HAVE BEEN PREPARED IN ACCORDANCE WITH THE LATEST ESCAMBIA COUNTY TECHNICAL SPECIFICATIONS.

ANY REFERENCE TO FDOT STANDARD SPECIFICATIONS FOR ROAD AND BRIDGE CONSTRUCTION, LATEST EDITION, DIVISION 1, GENERAL REQUIREMENTS AND COVENANTS, SHALL BE EXCLUDED AND NOT APPLICAPABLE TO ANY SPECIFICATION REFERED HEREIN OR OTHERWISE LISTED IN THESE PLANS OR RELATED DOCUMENTS OR THE ESCAMBIA COUNTY TECHNICAL SPECIFICATIONS.

PLANS PROPOSED FOR

LAKE CHARLENE DRAINAGE IMPROVEMENTS

100% PLANS
JULY 2018

COMMISSIONERS

DISTRICT ONE	JEFF BERGOSH (CHAIRMAN)
DISTRICT TWO	DOUG UNDERHILL
DISTRICT THREE	LUMON MAY (VICE CHAIRMAN)
DISTRICT FOUR	GROVER C. ROBINSON, IV
DISTRICT FIVE	STEVEN BARRY

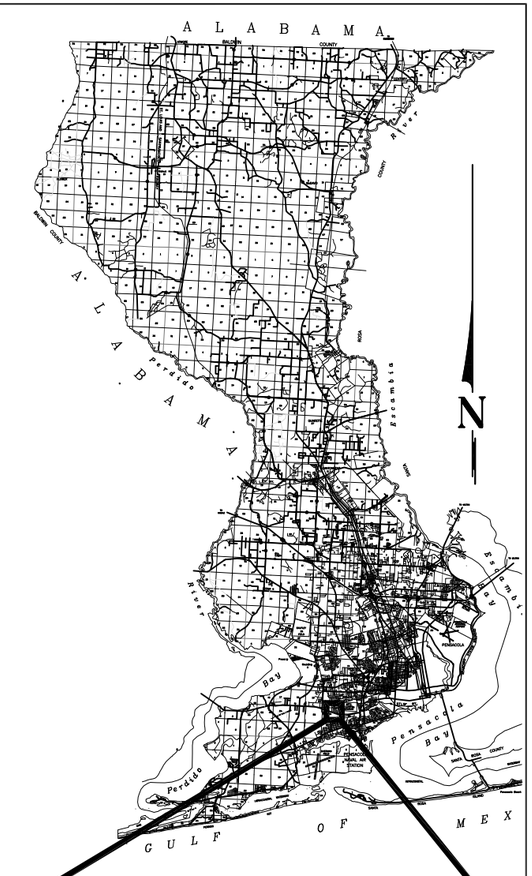

PROJECT LOCATION

VICINITY MAP

PROJECT MANAGER: D. Allen Vinson	
SECTION / TOWNSHIP / RANGE: S20, 21, 53 / T2S / R30,31W	DISTRICT: 2
PROJECT ENGINEER: D. Allen Vinson	REG FLA ENG NO: 72543
SIGNATURE: See EOR Seal	DATE: See EOR Seal

SUMMARY OF PAY ITEMS

PAY ITEM	DESCRIPTION	QUANTITY	UNITS
1	Mobilization / Demobilization	1	EA
2	Clearing and Grubbing, per County Spec 2230	4.32	ACRE
3	Earthwork	1	LS
4	Earthwork Establishing Grade, County Specs 2300	12438	SY
5	Dewatering - Bypass pumping at weir	1	LS
6	Dewatering -Trench	2300	LF
7	2" County Spec 2500 Type SP 12.5 Asphalt	6613	SY
8	Type SP 12.5 Asphalt Leveling (110lbs. per SY)	102	SY
9	1 1/4" County Spec 2500 Type SP 12.5 Asphalt (Driveways) in place, includes compacted subgrade	778	SY
10	Mill Existing Asphalt, 0"-1.5" Thickness	102	SY
11	Saw cut Existing Asphalt	81	LF
12	12" Stabilized Subgrade, County Spec 2300	10375	SY
13	6" Graded aggregate Base "Min. LBR 100 at 100% Modified Proctor", County Spec 2400	6764	SY
14	Relocate Traffic Signs	4	EA
15	FDOT Type E Curb And Gutter, FDOT Index 300	386	LF
16	County Type B Curb, Per County Detail	632	LF
17	Valley Gutter Section, 6" thick, Per County Detail	78	LF
18	4" Fiber Reinforced Concrete Driveway	249	SY
19	Storm Manhole	5	EA
20	Tie to Existing Inlets, Pipe, Manhole	6	EA
21	60" RCP Pipe	3973	LF
22	Jack and Bore 60" Pipe	200	LF
23	Class II Concrete for Endwalls	51	CY
24	Reinforcing Steel for Endwalls	4708	LB
25	Centipede Sod, Staked	12438	SY
26	Rip Rap Rubble w/ 4" Bedding Stone and Geotextile	45	SY
27	Establish and Provide Sediment & Erosion Control Plan including all items for implementation	1	LS
28	Fiber Reinforced Plastic (FRP) Sheet Pile Retaining	1334	SF
29	Thermoplastic 6" White Solid Stripe	50	LF
30	Thermoplastic 24" White Solid Stripe	42	LF
31	Thermoplastic 6" Double Yellow Solid Stripe	150	LF
32	RPM's (Y/Y)	8	EA
33	Maintenance of Traffic Safety Plan (develop and provide including all items for implementation)	1	LS
34	State Road - Maintenance of Traffic	1	LS
35	Riprap for Sheet Pile and Weir	1	LS
36	Utility Adjustment Conflict Structures-Sewer	2	EA
37	Utility Adjustment-6" Water Lines PVC	1	LS
630-2-12	Conduit, F&I, Directional Bore	234	LF
632-7-1	Signal Cable-New or Reconstructed Intersection, F&I	1	PI
635-2-11	Pull & Splice Box, 13"x24" Cover Size	3	EA
649-26-5	Steel Mast Arm Assembly, Remove, Deep Foundation-Bolt On Attachment	1	EA
649-21-17	Steel Mast Arm Assembly, F&I, Double Arm 70'-40'	1	EA
650-1-14	Traffic Signal, F&I, Alum., 3 Section, 1 Way	3	AS

SUMMARY OF PAY ITEMS

PAY ITEM	DESCRIPTION	QUANTITY	UNITS
650-1-18	Traffic Signal, F&I, Alum., 5 Section Straight, 1 Way	1	AS
660-2-101	Loop Assembly, F&I, Type A	1	AS
700-3-501	Sign Panel, Relocate, Up To 12 SF	2	EA

IITEM 1:
IT IS THE CONTRACTOR'S RESPONSIBILITY TO SELECT AND GAIN PERMISSION TO USE SITES/PARCELS WHICH ARE LOCATED OUTSIDE THE COUNTY'S RIGHT-OF-WAY OR MAINTENANCE CLAIM AREAS FOR LAYDOWN OR TEMPORARY EARTHWORK DISPOSAL (INCLUDING SEDIMENT CONTROL). THE CONTRACTOR SHALL RETURN ALL SITES USED FOR THESE PURPOSES TO ORIGINAL CONDITION OR BETTER. ANY COSTS ASSOCIATED WITH THE ABOVE SHALL BE INCLUDED IN THE COST OF MOBILIZATION/DEMOBILIZATION.

ITEM 2:
ITEM INCLUDES ALL ITEMS TO BE REMOVED FOR THE CONSTRUCTION OF THE PROJECT INCLUDING TREES, ROADWAYS, DRIVEWAYS, CURB AND GUTTER, FLUMES AND ALL OTHER ITEMS NOT LISTED AS A REMOVAL PAY ITEM. THE CONTRACTOR SHALL FAMILIARIZE HIMSELF WITH THE AMOUNT, LOCATION, AND SIZE OF TREES TO BE REMOVED BEFORE BIDDING.

ITEM 3:
EARTHWORK IS A LUMP SUM PAY ITEM AND IS LIMITED TO AREAS ADJACENT TO THE TWO ENDWALL LOCATIONS. DREDGING OF A PORTION OF THE CANAL, AS SHOWN IN THE PLANS, IS INCLUDED IN THIS PAY ITEM. THIS PAY ITEM DOES NOT INCLUDE EARTHWORK ASSOCIATED WITH PIPE INSTALLATION OR ROADWAY RECONSTRUCTION.

ITEM 4:
EARTHWORK ESTABLISHING GRADE INCLUDES ALL GRADING FROM THE EDGE OF PROPOSED PAVEMENT TO THE LIMITS OF CONSTRUCTION. THIS INCLUDES RE-ESTABLISHING ALL SHOULDER AND DITCH GRADES AS SHOWN IN THE PLANS AND CROSS SECTIONS.

ITEM 5:
THIS ITEM IS INTENDED TO COVER THE CONTRACTOR'S MEANS AND METHODS FOR CONSTRUCTION OF THE WEIR/ENDWALL/SHEET PILING AT THE END OF THE CANAL. THIS MAY INCLUDE BUT IS NOT LIMITED TO DEWATERING OF THE AREA, TEMPORARILY PUMPING DOWN THE WATER SURFACE ELEVATION, OR BYPASS PUMPING IN WORK AREAS.

ITEM 6:
THIS ITEM INCLUDES ALL ITEMS AND PHASES NECESSARY TO DEWATER THE TRENCHES FOR STORMWATER SYSTEM INSTALLATION.

ITEM 8:
ITEM INTENDED FOR THE RESURFACING OF MILLED AREAS.

ITEM 11:
SAW CUT QUANTITY IS INTENDED FOR LOCATIONS WERE RECONSTRUCTION LIMITS END. SAW CUTTING FOR US 98 IS INCLUDED IN THE COST OF LATERAL PAVEMENT PATCH.

ITEM 16:
QUANTITY INCLUDES COST TO CONSTRUCT FLUME THAT FLOWS OVER HEADWALL LOCATED OFF LAKE JOANNE DR. FLUME AREA IS 14SY.

ITEM 19:
INCLUDES THE TOP AND BOTTOM OF DRAINAGE STRUCTURES. MANHOLE ACCESS LOCATIONS SHALL AVOID THE WHEEL PATH OF ROADWAYS BY LOCATING ALONG THE CENTERLINE OF THE ROADWAY OR CENTER OF THE TRAVEL LANE.

ITEM 20:
ITEM IS FOR CONNECTION OF EXISTING PIPE TO PROPOSED DRAINAGE STRUCTURES.

ITEMS 21, 23-24:
ALL SHORING REQUIRED FOR PIPE INSTALLATION IS INCLUDED IN THE COST OF PIPE. DEWATERING IS INCLUDED IN OTHER ITEMS. THE COST OF REMOVAL AND REPLACEMENT OF UNSUITABLE MATERIAL IS INCLUDED IN THE COST OF PIPE. SEE GEOTECHNICAL REPORT FOR LIMITS OF UNSUITABLE MATERIAL. AT A MINIMUM, UNSUITABLE MATERIAL IS LIKELY TO BE ENCOUNTERED AT PIPE ELEVATIONS ALONG THE SOUTHERN 1300 FEET OF THE PROJECT.

ITEM 22:
JACK AND BORE PER FDOT SPECIFICATION 556 SHALL INCLUDE ALL MATERIALS, SHORING, AND DEWATERING REQUIRED FOR WORK. ITEM SHALL ALSO INCLUDE CONCRETE COLLAR FOR DISSIMILAR PIPE CONNECTION.

ITEM 25:
SOD ALL AREAS OF DISTURBANCE FROM R/W TO R/W. SOD THICKNESS SHOULD BE CONSIDERED WHEN PLACING ON FINAL GRADES SO THAT STORMWATER RUNOFF IS NOT IMPEDED SUCH AS AT THE EDGE OF PAVEMENT OR DRIVEWAYS. SODDING OR SEEDING OF DISTURBANCE OUTSIDE THE R/W SHALL BE INCLUDED IN THE COST OF MOBILIZATION/DEMOBILIZATION.

ITEM 27:
CONTRACTOR SHALL SUBMIT A PLAN FOR COUNTY APPROVAL. ITEM INCLUDES NPDES PERMITTING.

ITEMS 29-32:
INCLUDES LAYOUT, PAINT, AND THERMOPLASTIC APPLICATION WITHIN COUNTY RIGHT-OF-WAY. INCLUDES TEMPORARY AND PERMANENT RPMS. ALL PAVEMENT MARKINGS ASSOCIATED WITH MOT SHALL BE INCLUDED IN THE COST OF MOT.

ITEM 33:
CONTRACTOR SHALL SUBMIT A PLAN FOR COUNTY APPROVAL. ITEM INCLUDES BUT IS NOT LIMITED TO DETOUR SIGNAGE, WORK ZONE SIGNAGE, DRUMS, PCMS'S, PAVEMENT MARKINGS, AND INSTALLATION AND REMOVAL OF COMMERCIAL MATERIAL FOR LOCAL DRIVEWAY/ROADWAY ACCESS AS REQUIRED.

ITEM 34:
CONTRACTOR SHALL SUBMIT A PLAN FOR FDOT APPROVAL. ITEM INCLUDES BUT IS NOT LIMITED TO BARRIER WALL, WORK ZONE & DETOUR SIGNAGE, DRUMS, AND PCMS'S. PLAN MAY REQUIRE MULTIPLE SUBMITTALS TO FDOT.

ITEM 35:
ITEM COVERS ALL RIPRAP CEMENT SAND AND RIPRAP RUBBLE QUANTITIES SHOWN ON SHEET S007.

ITEM 36:
ITEM COVERS ALL COSTS ASSOCIATED WITH CONFLICT STRUCTURES OR OTHER MEANS THE CONTRACTOR SEES FIT TO KEEP SEWER LINES INTACT AND UNAFFECTED WITH PROPOSED DRAINAGE AND ALL CONSTRUCTION ACTIVITY. ALL WORK TO BE IN ACCORDANCE WITH ECUA AND/OR CORRY STATION REQUIREMENTS.

ITEM 37:
ITEM COVERS ALL COSTS ASSOCIATED WITH ADJUSTING WATER MAIN TO AVOID PROPOSED DRAINAGE. ALL WORK TO BE IN ACCORDANCE WITH ECUA AND/OR CORRY STATION REQUIREMENTS.

PAY ITEMS 632-2-12 THRU 700-3-501:
THESE PAYITEMS ARE DIRECTLY FROM THE MOST CURRENT VERSION OF THE FLORIDA DEPARTMENT BASIS OF ESTIMATES MANUAL.

HDR Engineering, Inc.
25 West Cedar Street, Suite 200
Pensacola, FL 32502-5945
(850) 432-6800
www.hdrinc.com
Certificate of Authorization No. 4213

ISSUE	DATE	DESCRIPTION
–	–	–

PROJECT MANAGER	A. VINSON
DESIGNED BY	J. CLARK
DRAWN BY	J. CLARK
CHECKED BY	J. BURCHFIELD
PROJECT NUMBER	PD 13-14.081

D. Allen Vinson, P.E.
License No. 72543

ESCAMBIA COUNTY ENGINEERING DEPARTMENT

LAKE CHARLENE AREA DRAINAGE IMPROVEMENTS

SUMMARY OF PAY ITEMS

11 X 17 SCALE: NOT TO SCALE

SHEET 2

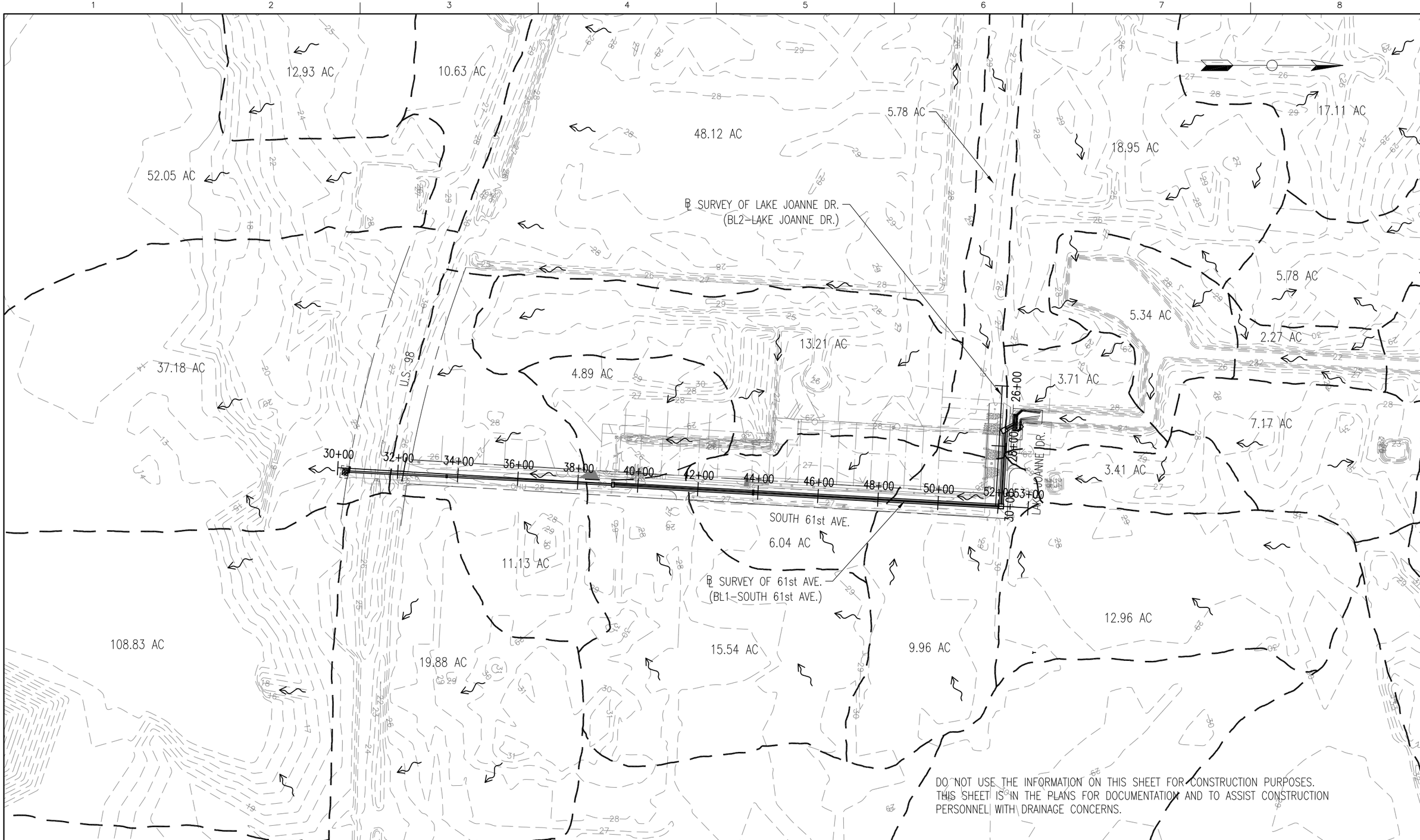

HDR Engineering, Inc.
25 West Cedar Street, Suite 200
Pensacola, FL 32502-5945
(850) 432-6800
www.hdrinc.com
Certificate of Authorization No. 4213

ISSUE	DATE	DESCRIPTION
–	–	–

PROJECT MANAGER	A. VINSON
DESIGNED BY	J. CLARK
DRAWN BY	J. CLARK
CHECKED BY	J. BURCHFIELD
PROJECT NUMBER	PD 13-14.081

D. Allen Vinson, P.E.

License No. 72543

ESCAMBIA COUNTY FLORIDA

ESCAMBIA COUNTY ENGINEERING DEPARTMENT

LAKE CHARLENE AREA DRAINAGE IMPROVEMENTS

DRAINAGE MAP

0 150 300

11 X 17 SCALE: 1" = 300'

SHEET 3

TRAFFIC DATA

DESIGN SPEED = 25 MPH
POSTED SPEED = 25 MPH
NO COUNTS AVAILABLE

RECONSTRUCTION

2.0" SP-12.5 ASPHALT

6" GRADED AGGREGATE BASE (98% MODIFIED PROCTOR, LBR 100)

12" TYPE B STABILIZATION (98% MODIFIED PROCTOR, LBR 40)

NOTES

1. LIMITS OF CONSTRUCTION SHALL BE AT THE R/W FOR THE LEFT SIDE AND FOR THE RIGHT SIDE IT SHALL BE 2 FT TO THE RIGHT OF SURVEY OF BASELINE.

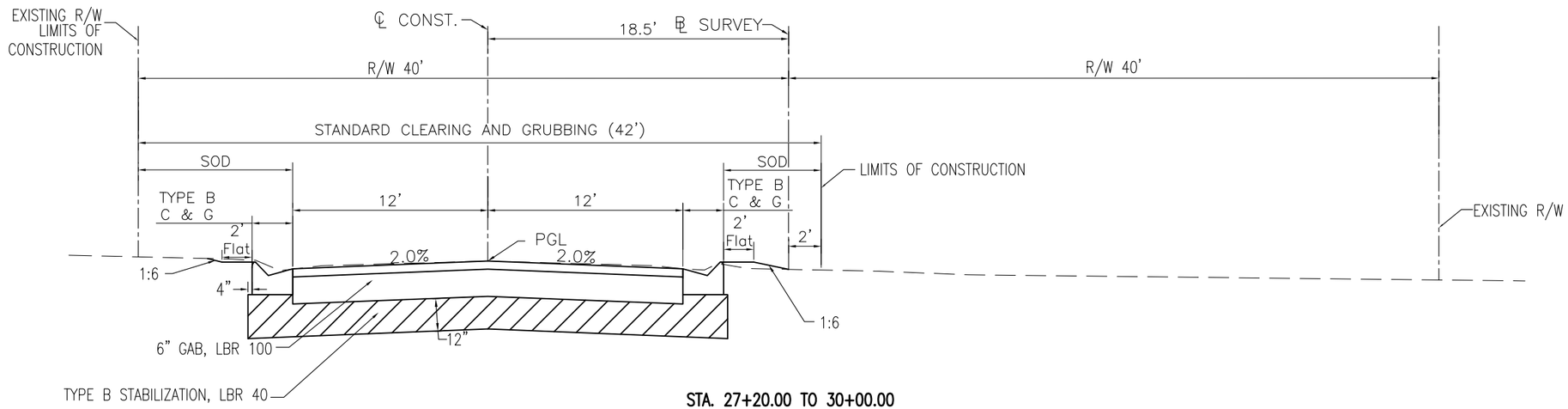

STA. 27+20.00 TO 30+00.00
LAKE JOANNE DR.
TYPICAL SECTION
(NTS)

TRAFFIC DATA

DESIGN SPEED = 30 MPH
POSTED SPEED = 30 MPH
NO COUNTS AVAILABLE

RECONSTRUCTION

2.0" SP-12.5 ASPHALT

6" GRADED AGGREGATE BASE (98% MODIFIED PROCTOR, LBR 100)

12" TYPE B STABILIZATION (98% MODIFIED PROCTOR, LBR 40)

NOTES

1. LIMITS OF CONSTRUCTION SHALL BE AT THE R/W.

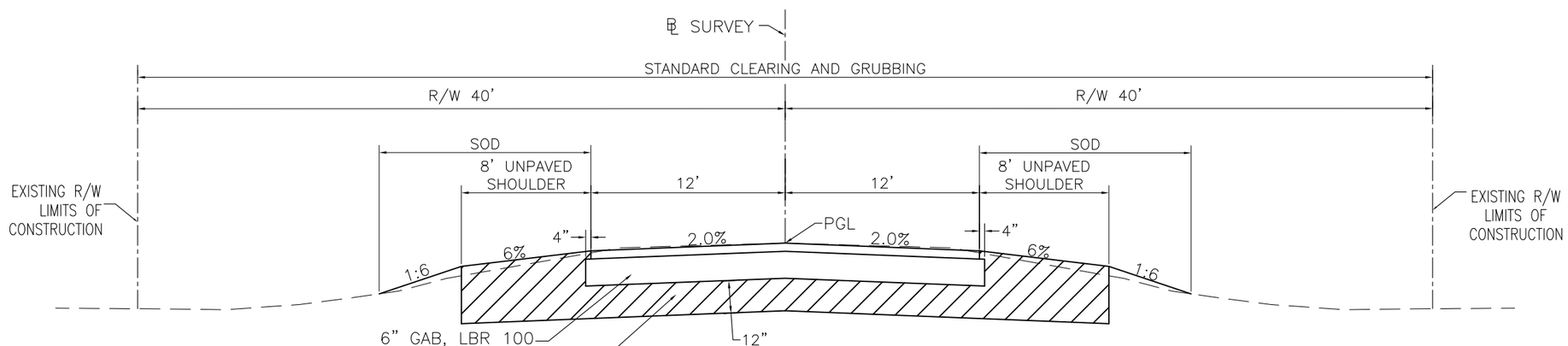

STA. 32+00.00 TO 52+26.11
61st AVE.
TYPICAL SECTION
(NTS)

HDR Engineering, Inc.
25 West Cedar Street, Suite 200
Pensacola, FL 32502-5945
(850) 432-6800
www.hdrinc.com
Certificate of Authorization No. 4213

ISSUE	DATE	DESCRIPTION
–	–	–

PROJECT MANAGER	A. VINSON
DESIGNED BY	J. CLARK
DRAWN BY	J. CLARK
CHECKED BY	J. BURCHFIELD
PROJECT NUMBER	PD 13-14.081

D. Allen Vinson, P.E.

License No. 72543

ESCAMBIA COUNTY ENGINEERING DEPARTMENT

LAKE CHARLENE AREA DRAINAGE IMPROVEMENTS

TYPICAL SECTIONS

0

11 X 17 SCALE: NOT TO SCALE

SHEET 4

TRAFFIC DATA

DESIGN SPEED = 25 MPH
POSTED SPEED = 25 MPH
NO COUNTS AVAILABLE

MILLING & RESURFACING

MILL 1" DEPTH RESURFACE
W/ 1" SP-12.5 ASPHALT

NOTES

1. LIMITS OF CONSTRUCTION SHALL BE FROM EDGE OF PAVEMENT TO EDGE OF PAVEMENT UNLESS OTHERWISE DIRECTED.

1. ALL CURB TO HAVE DUMMY JOINT AT 10' ON CENTER.

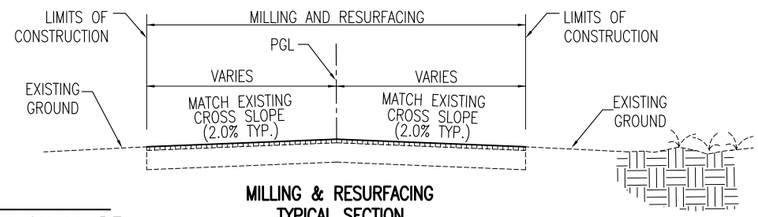

MILLING & RESURFACING TYPICAL SECTION (NTS) LAKE JOANNE DR.

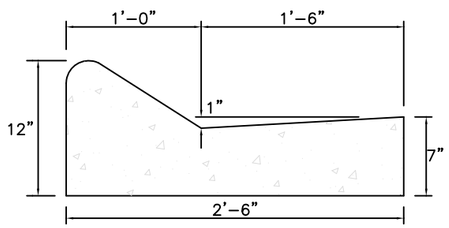

TYPE 'B' CURB & GUTTER FOR CURB MACHINE
NOT TO SCALE

NOTE:

1. ALL CURB TO HAVE DUMMY JOINT AT 10' ON CENTER. MIN. DEPTH OF JOINT TO BE 2".
2. EXPANSION JOINTS ARE TO BE 60' ON CENTER. TYPICAL FOR ALL CURB.
3. CONCRETE TO BE 3000 PSI.

TYPICAL DRIVEWAY CONNECTION NOTES:

1. ALL MATERIALS AND LABOR FOR INSTALLATION WILL BE THE RESPONSIBILITY OF THE CONTRACTOR.
2. DRIVEWAYS ABUTTING PAVED ROADS SHALL BE 1-1/2" ASPHALT WITH 6" STABILIZED SUBGRADE OR 4" TO 6" CONCRETE WITH 4" STABILIZED SUBGRADE ~ 95% COMPACTION (MODIFIED PROCTOR) WITH LBR 40 BETWEEN EDGE OF ROADWAY AND R/W LINE.
3. DRIVEWAYS ABUTTING A DIRT ROAD SHALL BE MILLED ASPHALT, GRADED AGGREGATE BASE, OR WASHED CONCRETE (4" IN DEPTH) ON THE COUNTY MAINTAINED PORTION OF DRIVEWAY.
4. IF NECESSARY, REFER TO F.D.O.T. INDEX DETAILS.
5. RADIUS OR FLARE IS ACCEPTABLE FOR NON CURB AND GUTTER CONNECTIONS ONLY.

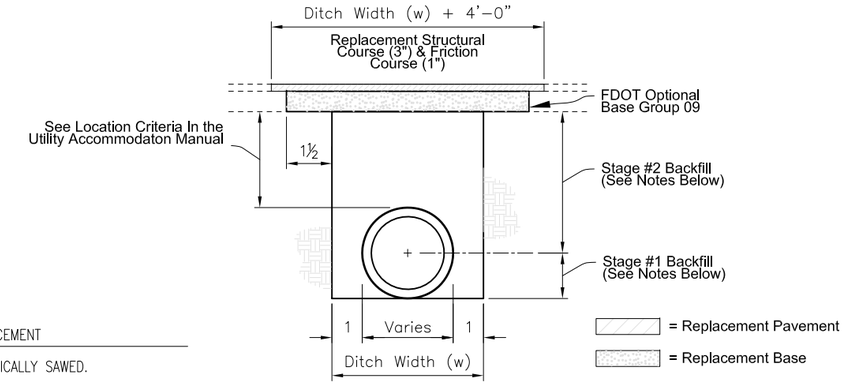

NOTES:

PAVEMENT REMOVAL AND REPLACEMENT

1. PAVEMENT SHALL BE MECHANICALLY SAWED.
2. THE REPLACEMENT ASPHALT SHALL MATCH THE EXISTING STRUCTURAL AND FRICTION COURSES FOR TYPE AND THICKNESS IN ACCORDANCE WITH CURRENT FDOT ASPHALT MIX SPECIFICATIONS.
3. THE NEW BASE MATERIALS SHALL BE EITHER OF THE SAME TYPE AND COMPOSITION AS THE MATERIALS REMOVED OR OF EQUAL OR GREATER STRUCTURAL ADEQUACY (SEE FDOT PAVEMENT DESIGN MANUAL).

BACKFILL OPTION

1. COMPACTED AND STABILIZED FILL
   - A. BACKFILL MATERIAL SHALL BE PLACED IN ACCORDANCE WITH SECTION 125 OF THE STANDARD SPECIFICATIONS.
   - B. IN STAGE #1, CONSTRUCT COMPACTED FILL BENEATH THE HAUNCHES OF THE PIPE, USING MECHANICAL TAMPS SUITABLE FOR THIS PURPOSE. THIS COMPACTION APPLIES TO THE MATERIAL PLACED BENEATH THE HAUNCHES OF THE PIPE AND ABOVE ANY BEDDING.
   - C. IN STAGE #2, CONSTRUCT COMPACTED FILL ALONG THE SIDES OF THE PIPE AND UP TO THE BOTTOM OF THE BASE, WITH THE UPPER 12" RECEIVING TYPE B STABILIZATION. IN LIEU OF TYPE B STABILIZATION, THE CONTRACTOR MAY CONSTRUCT USING OPTIONAL BASE GROUP 3.
2. FLOWABLE FILL
   - A. IF COMPACTION CAN NOT BE ACHIEVED THROUGH NORMAL MECHANICAL METHODS THEN FLOWABLE FILL MAY BE USED.
   - B. FLOWABLE FILL IS TO BE PLACED IN ACCORDANCE WITH SECTION 121 OF THE SPECIFICATIONS, AS APPROVED BY THE ENGINEER.
   - C. DO NOT ALLOW THE UTILITY BEING INSTALLED TO FLOAT. IF A METHOD IS PROVIDED TO PREVENT FLOTATION FROM OCCURRING, STAGES #1 AND #2 CAN BE COMBINED, IF APPROVED BY THE ENGINEER.
   - D. IN STAGE #1, PLACE FLOWABLE FILL MIDWAY UP ON BOTH SIDES OF THE UTILITY. ALLOW TO HARDEN BEFORE PLACING STAGE #2.
   - E. IN STAGE #2, PLACE FLOWABLE FILL TO THE BOTTOM OF THE EXISTING BASE COURSE.

GENERAL NOTES

1. THE DETAILS PROVIDED IN THIS STANDARD INDEX APPLY TO CASES IN WHICH JACK AND BORE OR DIRECTIONAL BORING METHODS ARE NOT REQUIRED BY THE ENGINEER.
2. FLOWABLE FILL SHALL NOT BE PLACED DIRECTLY OVER LOOSE, OR HIGH PLASTIC, OR MUCK MATERIAL (SEE INDEX 505) WHICH WILL CAUSE SETTLEMENT DUE TO FILL WEIGHT. WHERE HIGHLY COMPRESSIBLE MATERIAL EXISTS, THE AMOUNT, SHAPE AND DEPTH OF FLOWABLE FILL MUST BE ENGINEERED TO PREVENT PAVEMENT SETTLEMENT.
3. THESE DETAILS DO NOT APPLY TO UTILITY CUTS LONGITUDINAL TO THE CENTERLINE OF THE ROADWAY WHICH MAY REQUIRE THE ADDITIONAL USE OF GEOTEXTILES, SPECIAL BEDDING AND BACKFILL, OR OTHER SPECIAL REQUIREMENTS.
4. METHOD OF CONSTRUCTION MUST BE APPROVED BY THE ENGINEER.
5. SOME PIPE MAY REQUIRE SPECIAL GRANULAR BACKFILL UP TO 6" ABOVE TOP OF PIPE. GEOTEXTILES MAY BE REQUIRED TO ENCAPSULATE THE SPECIAL GRANULAR MATERIAL.
6. WHERE ASPHALT CONCRETE OVERLAYS EXIST OVER FULL SLAB CONCRETE PAVEMENT, THE REPLACEMENT PAVEMENT SHALL HAVE AN OVERLAY CONSTRUCTED OVER THE REPLACEMENT SLAB. THE OVERLAY SHALL MATCH THE EXISTING ASPHALT PAVEMENT THICKNESS. THE REPLACEMENT FRICTION COURSE SHALL MATCH THE EXISTING FRICTION COURSE, EXCEPT STRUCTURAL COURSE MAY BE USED IN LIEU OF DENSE GRADED FRICTION COURSE.
7. ALL SHOULDER PAVEMENT, CURB, CURB AND GUTTER, AND THEIR SUBSTRUCTURE DISTURBED BY UTILITY TRENCH CUT CONSTRUCTION SHALL BE RESTORED IN KIND.
8. THE USE OF FLOWABLE FILL TO REDUCE THE TIME TRAFFIC IS TAKEN OFF A FACILITY IS ACCEPTABLE BUT MUST HAVE PRIOR APPROVAL BY THE ENGINEER. FLOWABLE FILL USE IS ALLOWED ONLY WHEN PROPERLY ENGINEERED FOR PAVEMENT CROSSINGS, WHETHER STRAIGHT OR DIAGONAL, AND SHALL NOT BE INSTALLED FOR SIGNIFICANT DEPTHS OR LENGTHS. THE MAXIMUM LENGTH SHALL BE FIFTY (50) FEET AND A MAXIMUM DEPTH OF SIX (6) FEET UNLESS SUPPORTED BY AN ENGINEERING DOCUMENT PREPARED BY A REGISTERED PROFESSIONAL ENGINEER THAT SPECIALIZES IN SOILS ENGINEERING. THE ENGINEERING DOCUMENT SHALL ADDRESS THE EVALUATION OF LOCAL GROUNDWATER FLOW INTERRUPTION AND SETTLEMENT POTENTIAL.
9. EXCAVATABLE FLOWABLE FILL IS TO BE USED WHEN THE FLOWABLE FILL OPTION IS SELECTED.

TRENCH CUTS AND RESTORATIONS ACROSS ROADWAYS PER FDOT INDEX 307

HDR Engineering, Inc.
25 West Cedar Street, Suite 200
Pensacola, FL 32502-5945
(850) 432-6800
www.hdrinc.com
Certificate of Authorization No. 4213

ISSUE	DATE	DESCRIPTION
–	–	–

PROJECT MANAGER	A. VINSON
DESIGNED BY	J. CLARK
DRAWN BY	J. CLARK
CHECKED BY	J. BURCHFIELD
PROJECT NUMBER	PD 13-14.081

D. Allen Vinson, P.E.
License No. 72543

ESCAMBIA COUNTY ENGINEERING DEPARTMENT

LAKE CHARLENE AREA DRAINAGE IMPROVEMENTS

TYPICAL SECTION DETAILS

0

11 X 17 SCALE: NOT TO SCALE

SHEET 5

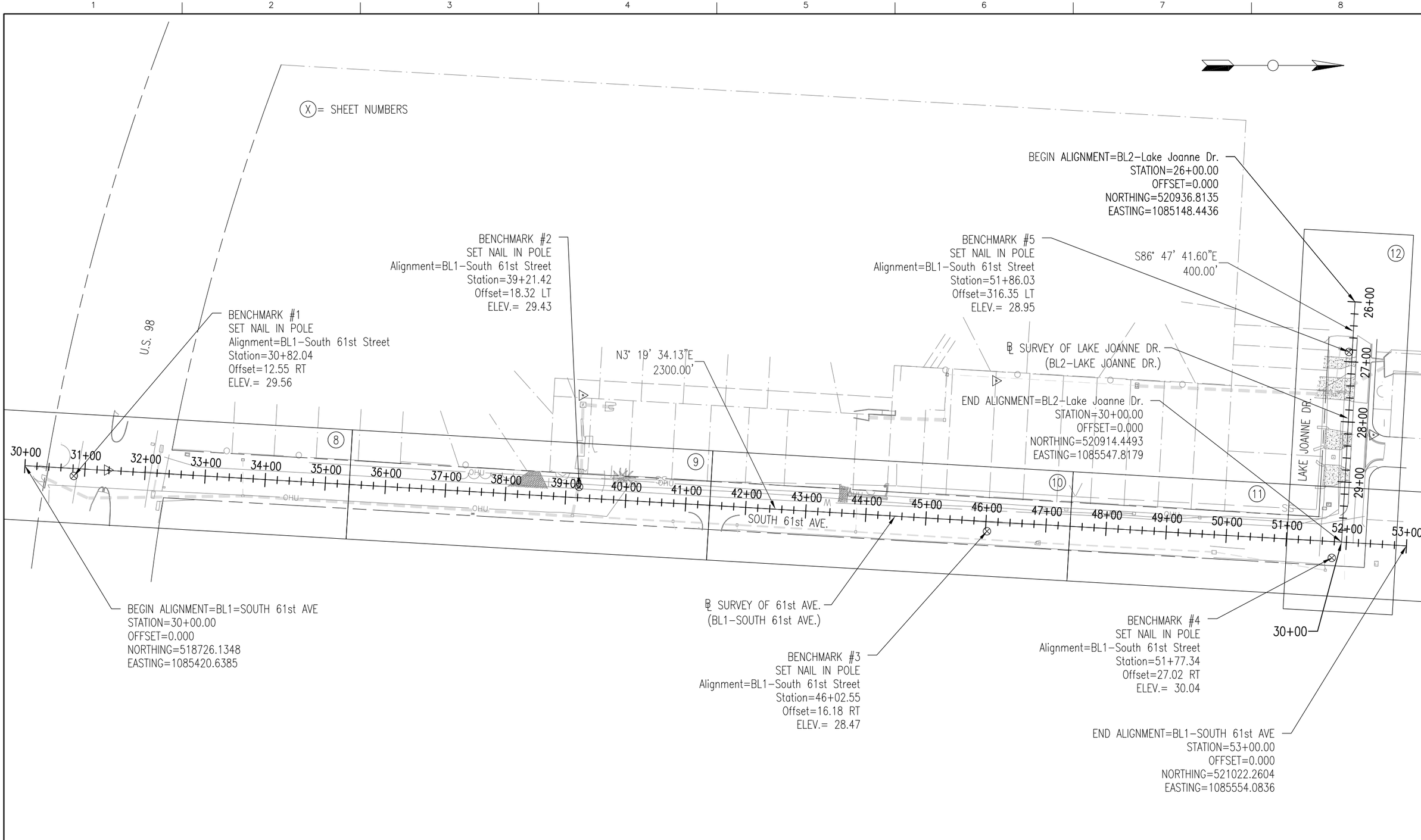

HDR Engineering, Inc.
25 West Cedar Street, Suite 200
Pensacola, FL 32502-5945
(850) 432-6800
www.hdrinc.com
Certificate of Authorization No. 4213

ISSUE	DATE	DESCRIPTION
–	–	–

PROJECT MANAGER	A. VINSON
DESIGNED BY	J. CLARK
DRAWN BY	J. CLARK
CHECKED BY	J. BURCHFIELD
PROJECT NUMBER	PD 13-14.081

D. Allen Vinson, P.E.

License No. 72543

ESCAMBIA COUNTY
ENGINEERING DEPARTMENT

LAKE CHARLENE AREA
DRAINAGE IMPROVEMENTS

PROJECT LAYOUT

0 75 150

11 X 17 SCALE: 1" = 150'

SHEET 6

GENERAL NOTES:

1. THE CONTRACTORS SHALL NOTIFY THE COUNTY DESIGN ENGINEER OR DESIGNEE 48 HOURS PRIOR TO CONSTRUCTION.
2. ALL CONDITIONS AND STIPULATIONS OF THE CONSTRUCTION PERMITS AND THE APPROVALS ISSUED BY THE ESCAMBIA COUNTY ENGINEER SHALL BE COMPLIED WITH IN EVERY DETAIL.
3. ANY DAMAGE TO ROADWAYS OR ADJACENT PRIVATE PROPERTIES CAUSED BY THE CONTRACTORS OPERATIONS SHALL BE REPAIRED BY THE CONTRACTOR AT THE CONTRACTOR'S SOLE EXPENSE.
4. THE CONTRACTOR SHALL TAKE STEPS NECESSARY TO PREVENT EROSION AND ANY OFF SITE SEDIMENT TRANSPORT RESULTING FROM INCREASED RUNOFF DURING CONSTRUCTION BY PROVIDING SILT FENCE AND/OR STAKED HAY BALES AS REQUIRED BY FDOT EROSION AND SEDIMENT CONTROL INSPECTOR'S MANUAL, 2012 EDITION, OR AS INDICATED ON THE PLANS. ALL EROSION CONTROL MEASURES SHALL REMAIN IN PLACE UNTIL ASSOCIATED DISTURBED AREAS ARE STABILIZED AS TO REDUCE SEDIMENT RUNOFF, UNLESS OTHERWISE DIRECTED BY THE ENGINEER OR DESIGNEE.
5. ANY NECESSARY PERMITS WILL BE THE RESPONSIBILITY OF THE CONTRACTOR. ESCAMBIA COUNTY OR ITS DESIGNEE WILL ASSIST CONTRACTOR WITH REQUIRED PERMITS.
6. THE CONTRACTOR IS CAUTIONED TO VISIT THE SITE AND FAMILIARIZE HIMSELF WITH THE PROJECT PRIOR TO BIDDING AND/OR CONSTRUCTION.
7. IT SHALL BE THE CONTRACTORS RESPONSIBILITY TO PRESERVE OR RELOCATE ALL BENCHMARKS (VERTICAL CONTROL) AS NEEDED DURING CONSTRUCTION. ALL PUBLIC OR PRIVATE CORNER MONUMENTATION SHALL BE PROTECTED. IF A PUBLIC OR PRIVATE CORNER MONUMENTATION IS IN DANGER OF BEING DESTROYED AND HAS NOT BEEN PROPERLY REFERENCED, THE CONTRACTOR SHALL NOTIFY THE ENGINEER OR DESIGNEE IMMEDIATELY. ANY ESCAMBIA COUNTY HARN/GPS NETWORK MONUMENTS OR BUREAU OF SURVEY AND MAPPING GPS NETWORK MONUMENTS WITHIN THE LIMITS OF CONSTRUCTION SHALL BE PROTECTED. IF A HARN/GPS NETWORK MONUMENTS OR BUREAU OF SURVEY AND MAPPING GPS NETWORK MONUMENTS ARE DISTURBED OR DESTROYED THE CONTRACTOR SHALL BE RESPONSIBLE FOR RELACEMENT OF THE MONUMENTS AND HAVE THE MONUMENTS POSITION DETERMINED BY A FLORIDA LICENSED PROFESSIONAL SURVEYOR AND MAPPER USING GUIDELINES AS ESTABLISHED BY NATIONAL GEODETIC SURVEY FOR BLUE BOOKING AND APPROVAL.
8. EXISTING DRAINAGE FEATURES WITHIN CONSTRUCTION LIMITS SHALL REMAIN UNLESS OTHERWISE NOTED.
9. THE CONTRACTOR SHALL MATCH EXISTING CONDITIONS AT THE BEGINNING AND END OF CONSTRUCTION AS DIRECTED BY THE COUNTY ENGINEER OR DESIGNEE.
10 EXISTING STREETS AND DRIVES SHALL BE MAINTAINED TO LOCAL TRAFFIC AND PROPERTY OWNERS.
11. ALL ROADWAY CONSTRUCTION SHALL COMPLY WITH THE ESCAMBIA COUNTY TECHNICAL SPECIFICATIONS, LATEST EDITION.
12. ALL MATERIALS, TESTING AND CONSTRUCTION METHODS SHALL CONFORM TO THE ESCAMBIA COUNTY TECHNICAL SPECIFICATIONS, LATEST EDITION.
13. ANY REFERENCE TO FDOT STANDARD SPECIFICATIONS FOR ROAD AND BRIDGE CONSTRUCTION, LATEST EDITION, DIVISION 1, GENERAL REQUIREMENTS AND COVENANTS, SHALL BE EXCLUDED AND NOT APPLICABLE TO ANY SPECIFICATION REFERRED HEREIN OR OTHERWISE LISTED IN THESE PLANS OR RELATED DOCUMENTS OR THE ESCAMBIA COUNTY TECHNICAL SPECIFICATIONS.
14. EXISTING STREET AND ROAD NAME SIGNS ON THE PROJECT SHALL BE KEPT VISIBLE AT ALL TIMES FOR THE FACILITATION OF ACCESS BY EMERGENCY VEHICLES. ALL OTHER EXISTING SIGNS THAT CONFLICT WITH CONSTRUCTION OPERATIONS SHALL BE TAKEN DOWN AND STOCKPILED WITHIN THE R/W LIMITS BY THE CONTRACTOR AS DIRECTED BY THE COUNTY ENGINEER OR DESIGNEE. ANY EXISTING SIGNS THAT ARE TO BE RELOCATED AND ARE DAMAGED BEYOND USE BY THE CONTRACTOR SHALL BE REPLACED BY THE CONTRACTOR AT HIS EXPENSE.
15. CONTRACTOR SHALL COMPLY WITH ALL F.D.E.P. AND ARMY CORP. OF ENGINEERS REQUIREMENTS.
16. ONLY ACCESS TO THE ROAD R/W AS SHOWN IS GUARANTEED BY THE COUNTY. PRIVATE R/W REQUIRED BY THE CONTRACTOR TO FACILITATE CONSTRUCTION SHALL BE ACQUIRED BY THE CONTRACTOR WITH NO ADDITIONAL COMPENSATION OR ASSISTANCE FROM THE COUNTY.
17. IN THE EVENT THAT SURVEY MONUMENTATION OR REFERENCE POINTS ARE MISSING OR HAVE BEEN DESTROYED, PLEASE CONTACT:

JOE BARETT
3363 WEST PARK PLACE
PENSACOLA, FLORIDA 32505 PH (850) 595-3427

BYRON A. FAIRCLOTH
MOTT MACDONALD
1232 JACKSON AVENUE
CHIPLEY, FL. 32428

18. VEGETATION ON R/W AND EASEMENTS SHALL BE RESTORED TO ORIGINAL CONDITION UNLESS OTHERWISE NOTED ON THE PLAN SHEETS. COST OF SAID RESTORATION SHALL BE CONSIDERED INCIDENTAL TO OTHER PAY ITEMS.
19. ALL TREES WITHIN LIMITS OF CONSTRUCTION SHALL BE REMOVED UNLESS OTHERWISE NOTED IN PLANS.
20. ALL COMPACTED FILL SHALL BE PLACED IN 4" LIFTS FOR HAND POWERED TAMPERS AND 8" LIFTS FOR HEAVY EQUIPMENT OPERATED TAMPERS.
21. IF ARCHAEOLOGICAL MATERIAL/PREHISTORIC ARTIFACTS SUCH AS POTTERY OR CERAMICS, STONE TOOLS OR METAL IMPLEMENTS, OR ANY OTHER PHYSICAL REMAINS THAT COULD BE ASSOCIATED WITH NATIVE AMERICAN CULTURES, OR EARLY COLONIAL OR AMERICAN SETTLEMENT ARE ENCOUNTERED AT ANY TIME, THE PROJECT SHOULD CEASE ALL ACTIVITIES INVOLVING SUBSURFACE DISTURBANCE IN THE IMMEDIATE VICINITY OF SUCH DISCOVERIES. THE APPLICANT/RECIPIENT, OR OTHER DESIGNEE, SHOULD CONTACT THE FLORIDA DEPARTMENT OF STATE, DIVISION OF HISTORICAL RESOURCES, THE STATE HISTORIC PRESERVATION OFFICER (SHPO) AND THE DSH/FEMA REGION IV ENVIRONMENTAL OFFICER AND FDEM STATE ENVIRONMENTAL LIAISON OFFICER FOR FURTHER GUIDANCE. PROJECT ACTIVITIES SHOULD NOT RESUME WITHOUT WERBAL AND/OR WRITTEN AUTHORIZATION FROM THE DIVISION OF HISTORICAL RESOURCES.
22. IN THE EVENT THAT UNMARKED HUMAN REMAINS ARE ENCOUNTERED DURING PERMITTED ACTIVITIES, ALL WORK MUST STOP IMMEDIATELY AND THE PROPER AUTHORITIES NOTIFIED IN ACCORDANCE WITH F.S. 872.05.
23. GROUNDWATER ELEVATIONS SHOWN IN THE PLANS REFLECT GROUNDWATER ELEVATIONS DURING TIME OF GEOTECHNICAL BORINGS ONLY. GROUNDWATER ELEVATIONS CAN FLUCTUATE UP OR DOWN.

UTILITY NOTES:

1. THE LOCATION SHOWN FOR EXISTING UNDERGROUND UTILITIES IS APPROXIMATE. THE CONTRACTOR SHALL DETERMINE THE EXACT LOCATION OF ALL EXISTING UTILITIES BEFORE COMMENCING WORK IN EACH AREA. THE CONTRACTOR AGREES TO BE COMPLETELY RESPONSIBLE FOR ALL DAMAGES WHICH MIGHT OCCUR BY HIS FAILURE TO EXACTLY LOCATE AND PRESERVE ALL UTILITIES.
2. UTILITY OWNERS SHALL BE NOTIFIED AT LEAST 48 HOURS PRIOR TO ANY CONSTRUCTION SO THAT THE UTILITY OWNER CAN SPOT VERIFY AND/OR EXPOSE THEIR UTILITIES. KNOWN UTILITIES OWNERS INCLUDE:

SEWER/WATER - EMERALD COAST UTILITY AUTHORITY
MR. BRANDON KNIGHT
P.O. BOX 15311
PENSACOLA, FL. 32514 PH: (850) 969-6650

ELECTRIC - GULF POWER
MR. CHAD SWAILS
5120 DOGWOOD DRIVE
MILTON, FL. 32570 PH: (850) 429-2446

NATURAL GAS - ENERGY SERVICES OF PENSACOLA
MS. DIANE MOORE
1625 ATWOOD DRIVE
PENSACOLA, FL. 32514 PH: (850) 324-8004

CABLE - COX CABLE
MR. TROY YOUNG
2421 EXECUTIVE PLAZA
PENSACOLA, FL. 32504 PH: (850) 857-4564

TELEPHONE - AT&T FLORIDA
MR. JONATHAN BLANKINCHIP
605 W. GARDEN STREET
PENSACOLA, FL. 32502 PH: (850) 614+7093

SUNSHINE STATE ONE-CALL
7200 LAKE ELLENOR DRIVE, SUITE 200
ORLANDO, FL. 32809 PH: (800) 432-4770

TRAFFIC DEPARTMENT - ESCAMBIA COUNTY PUBLIC WORKS
MRS. JOHNNY COX
3363 WEST PARK PLACE
PENSACOLA, FL. 32505 PH:(850) 595-3404

3. AT&T FLORIDA WILL COMPLETE ALL WORK DURING THE HOURS OF 7:30 AM - 4:30 PM, MONDAY THRU FRIDAY. NO NIGHT OR WEEKEND WORK.
4. ALL CABLE DAMAGE MUST BE REPORTED TO THE ATT FLORIDA REPAIR SERVICE DEPARTMENT AT 611 FROM A LAND LINE OR 877-737-2478 IF USING A CELL PHONE.
5. CONTRACTOR IS TO USE CAUTION WHEN WORKING IN OR AROUND AREAS OF OVERHEAD TRANSMISSION LINES AND UNDERGROUND UTILITIES.
6. UTILITIES TO REMAIN AND BE PROTECTED DURING CONSTRUCTION. NECESSARY REPAIRS SHALL BE CONSIDERED INCIDENTAL TO OTHER PAY ITEMS AND SHALL BE TO THE SATISFACTION OF UTILITY OWNERS.

SURVEYOR NOTES

1. NORTH AND BEARINGS ARE GRID BASED ON THE NORTH AMERICAN DATUN 1983 AS SHOWN ON THE BASELINE OF SURVEY OF 61ST AVE. PER GPS CONTINUAL OPERATING REFERENCE STATION "PENSACOLA" PER THE STATE OF FLORIDA.
2. NO TITLE SEARCH WAS PERFORMED BY NOR FURNISHED TO MOTT MACDONALD FLORIDA LLC FOR THE PURPOSES OF THIS SURVEY SHOWN HEREON.
3. THE OPINION OF THE LOCATION AND EXTENT OF THE PROPERTY REPRESENTED & RIGHT OF WAYS BY THE SURVEY DOES NOT GUARANTEE TITLE TO NOR DETERMINE OWNERSHIP TO ANY PERSONS OR PARTY.
4. ALL UNDERGROUND UTILITIES SHOWN WERE LOCATED PER 811 DESIGN TICKETS 323606849, 323606909 & 323606963 AND THEIR PAINTED/FLAGGED LOCATIONS SURVEYED BY MOTT MACDONALD FIELD CREWS. SURVEYOR DOES GUARANTEE UNDERGROUND LOCATIONS. THERE MAY BE OTHER UNDERGROUND UTILITIES NOT SHOWN HEREON. SIZES AND DEPTHS ARE UNKNOWN.
5. ELEVATIONS ARE BASED ON THE NORTH AMERICAN VERTICAL DATUM 1988 AS SHOWN ON THIS SURVEY PER THE PROJECTED ELEVATION FROM GPS CONTINUAL REFERENCE STATION "PENSACOLA" PER THE STATE OF FLORIDA.
6. RIGHT OF WAYS AND PARCELS LINES ARE CALCULATED PER FIELD SURVEY OF SUBDIVISION MAPS, RIGHT OF WAY MAPS AND APPARENT MAINTENANCE.

LEGEND & ABBREVIATIONS

- FND. = FOUND
- = TELEPHONE PEDESTAL
- = SINGLE SUPPORT SIGN
- = ELECTRIC OUTLET
- = FLOOD LIGHT
- = GUY POLE
- = LIGHT POLE
- ELEC = ELECTRIC METER
- GAS = GAS METER
- WATER = WATER METER
- = SEWER MANHOLE
- = TELEPHONE MANHOLE
- = WIRE PULL BOX
- = DELINEATOR POST
- = FLAG POLE
- = FIRE HYDRANT
- = SHARED POLE
- = SERVICE CABINET/VAULT
- = GAS VALVE COVER
- = SEWER VALVE COVER
- = WATER VALVE COVER
- = VALVE COVER
- GAS = GAS VALVE
- = SEWER VALVE
- WATER = WATER VALVE
- = VALVE UNKNOWN

LEGEND & ABBREVIATIONS (CONT'D)

- = DRAINAGE MANHOLE
- = POWER POLE
- = GUY WIRE ANCHOR
- = COLUMN
- = MAILBOX
- = CLEANOUT
- = FENCE AS DENOTED
- = OVERHEAD TELEPHONE LINE
- = GAS LINE
- = WATER LINE
- = FIBER OPTIC CABLE LINE
- = RIGHT OF WAY LINE
- = APPROXIMATE PROPERTY LINE
- = OVERHEAD UTILITY LINE
- = VEGETATION LINE

HDR Engineering, Inc.
25 West Cedar Street, Suite 200
Pensacola, FL 32502-5945
(850) 432-6800
www.hdrinc.com
Certificate of Authorization No. 4213

ISSUE	DATE	DESCRIPTION
–	–	–

PROJECT MANAGER	A. VINSON
DESIGNED BY	J. CLARK
DRAWN BY	J. CLARK
CHECKED BY	J. BURCHFIELD
PROJECT NUMBER	PD 13–14.081

D. Allen Vinson, P.E.

License No. 72543

ESCAMBIA COUNTY ENGINEERING DEPARTMENT

LAKE CHARLENE AREA DRAINAGE IMPROVEMENTS

PROJECT NOTES

0

11 X 17 SCALE: NOT TO SCALE

SHEET 7

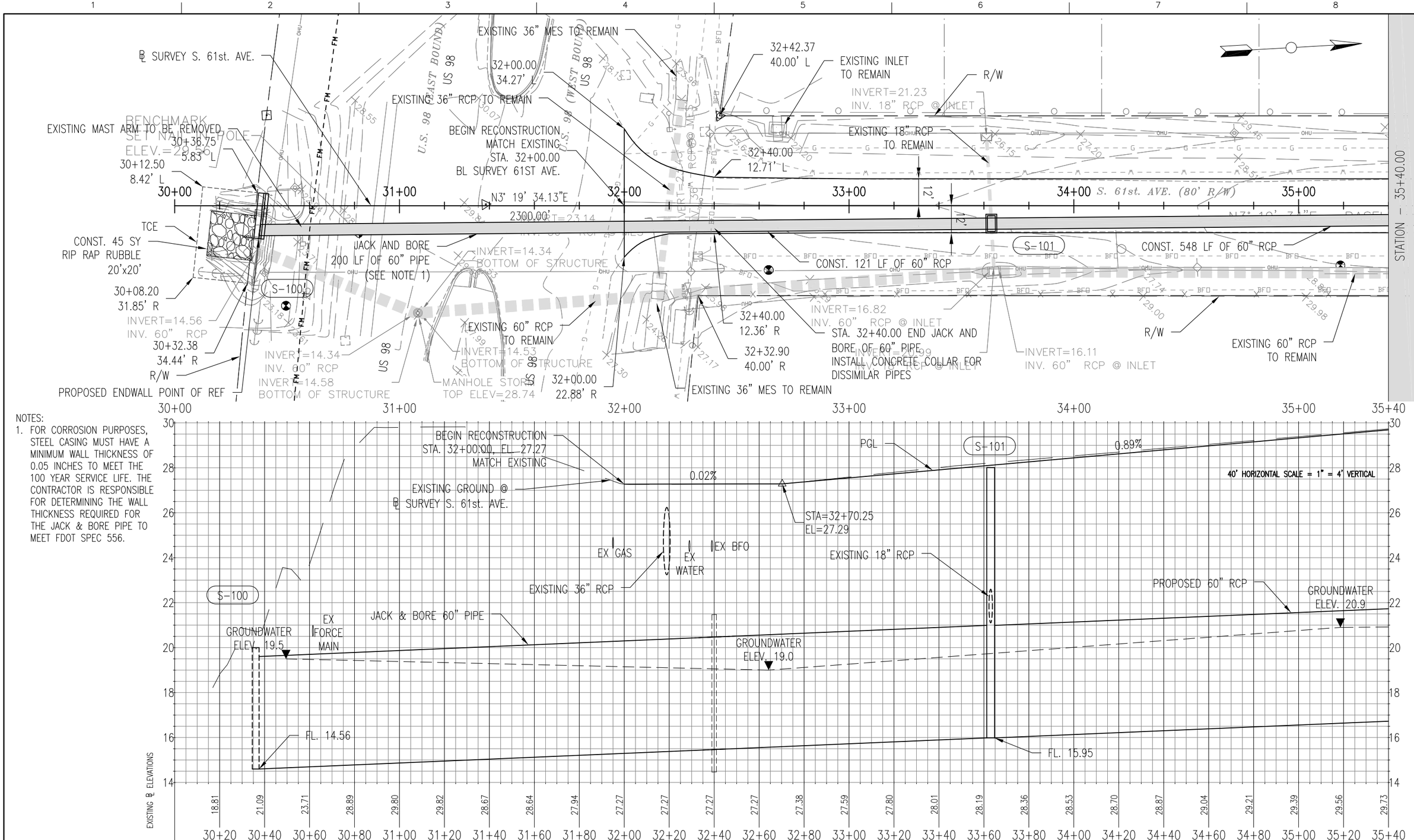

NOTES:

1. FOR CORROSION PURPOSES, STEEL CASING MUST HAVE A MINIMUM WALL THICKNESS OF 0.05 INCHES TO MEET THE 100 YEAR SERVICE LIFE. THE CONTRACTOR IS RESPONSIBLE FOR DETERMINING THE WALL THICKNESS REQUIRED FOR THE JACK & BORE PIPE TO MEET FDOT SPEC 556.

HDR Engineering, Inc.
25 West Cedar Street, Suite 200
Pensacola, FL 32502-5945
(850) 432-6800
www.hdrinc.com
Certificate of Authorization No. 4213

ISSUE	DATE	DESCRIPTION
–	–	–

PROJECT MANAGER	A. VINSON
DESIGNED BY	A. VINSON
DRAWN BY	J. CLARK
CHECKED BY	A. VINSON
PROJECT NUMBER	13-14.081

D. Allen Vinson, P.E.
License No. 72543

ESCAMBIA COUNTY
ENGINEERING DEPARTMENT

LAKE CHARLENE
DRAINAGE IMPROVEMENTS

PLAN & PROFILE
S. 61 st. AVE.
STA. 30+00.00 - 35+40.00

0 20 40

11 X 17 SCALE: 1" = 40'

SHEET 8

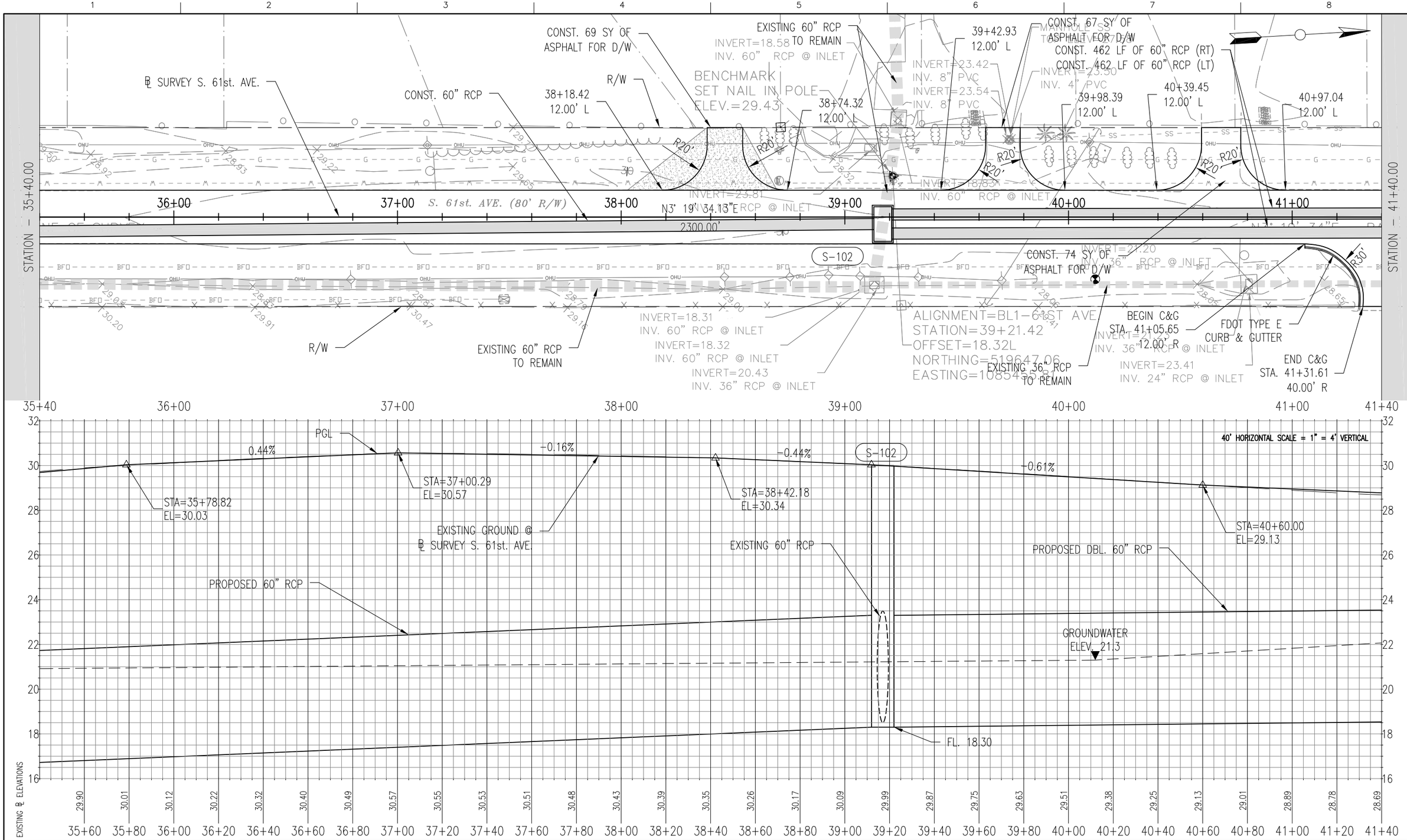

HDR Engineering, Inc.
25 West Cedar Street, Suite 200
Pensacola, FL 32502-5945
(850) 432-6800
www.hdrinc.com
Certificate of Authorization No. 4213

ISSUE	DATE	DESCRIPTION
–	–	–

PROJECT MANAGER	A. VINSON
DESIGNED BY	A. VINSON
DRAWN BY	J. CLARK
CHECKED BY	A. VINSON
PROJECT NUMBER	13-14.081

D. Allen Vinson, P.E.
License No. 72543

ESCAMBIA COUNTY ENGINEERING DEPARTMENT

LAKE CHARLENE DRAINAGE IMPROVEMENTS

PLAN & PROFILE
S. 61 st. AVE.
STA. 35+40.00 - 41+40.00

0 20 40

11 X 17 SCALE: 1" = 40'

SHEET 9

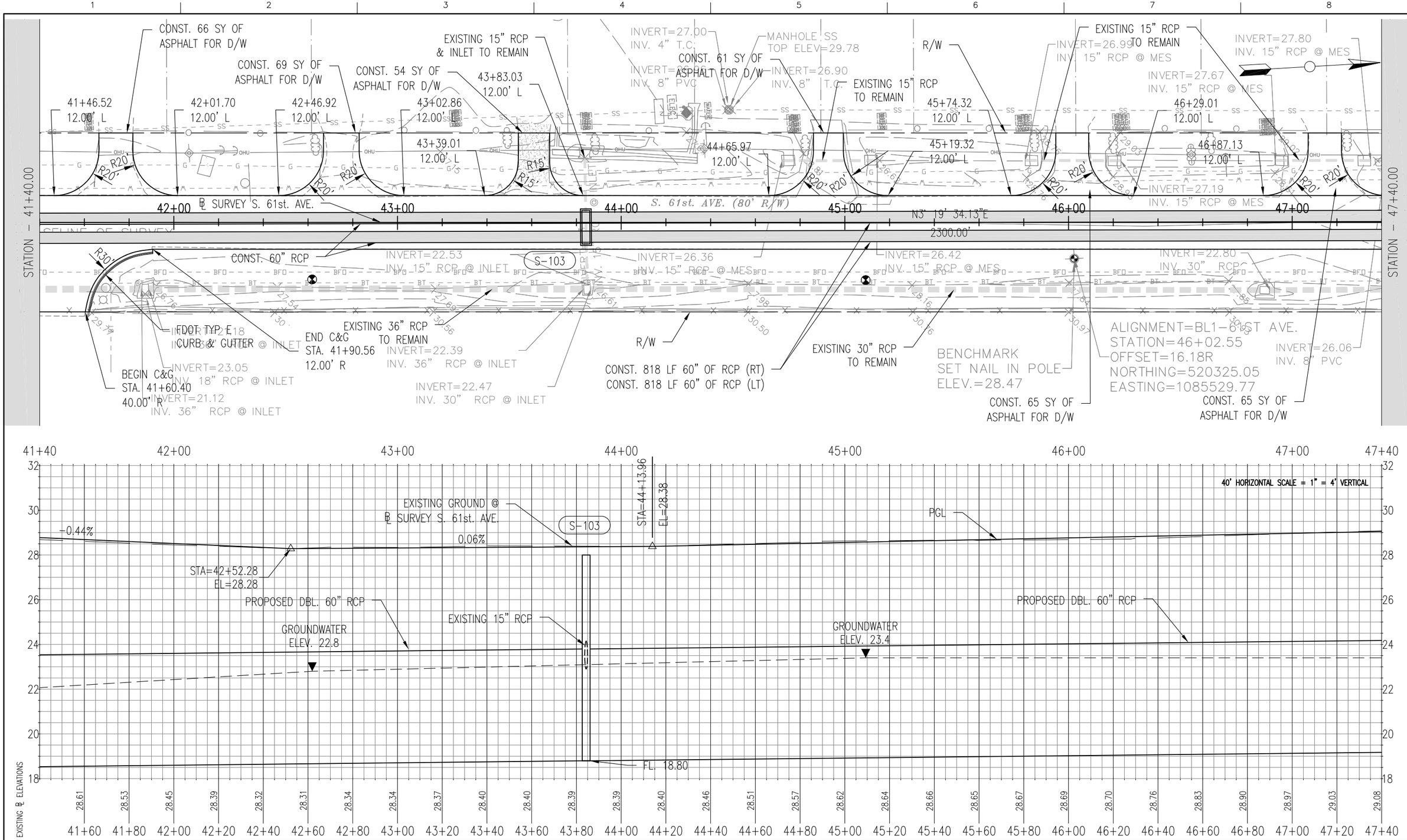

HDR Engineering, Inc.
25 West Cedar Street, Suite 200
Pensacola, FL 32502-5945
(850) 432-6800
www.hdrinc.com
Certificate of Authorization No. 4213

ISSUE	DATE	DESCRIPTION
–	–	–

PROJECT MANAGER	A. VINSON
DESIGNED BY	A. VINSON
DRAWN BY	J. CLARK
CHECKED BY	A. VINSON
PROJECT NUMBER	13-14.081

D. Allen Vinson, P.E.
License No. 72543

ESCAMBIA COUNTY ENGINEERING DEPARTMENT

LAKE CHARLENE DRAINAGE IMPROVEMENTS

PLAN & PROFILE
S. 61 st. AVE.
STA. 41+40.00 - 47+40.00

0 20 40

11 X 17 SCALE: 1" = 40'

SHEET 10

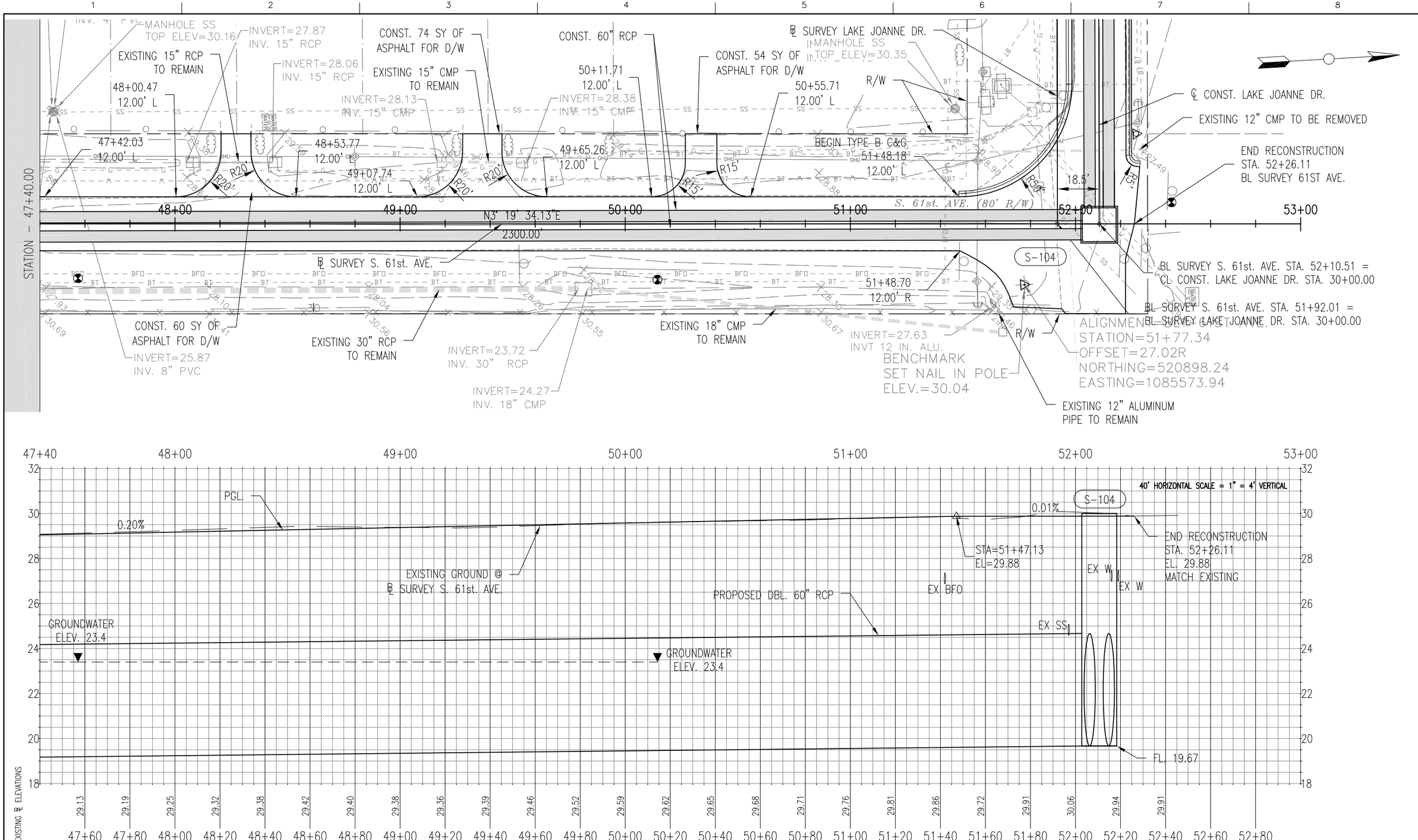

HDR Engineering, Inc.
25 West Cedar Street, Suite 200
Pensacola, FL 32502-5945
(850) 432-6800
www.hdrinc.com
Certificate of Authorization No. 4213

ISSUE	DATE	DESCRIPTION
–	–	–

PROJECT MANAGER	A. VINSON
DESIGNED BY	A. VINSON
DRAWN BY	J. CLARK
CHECKED BY	A. VINSON
PROJECT NUMBER	13-14.081

D. Allen Vinson, P.E.
License No. 72543

ESCAMBIA COUNTY
ENGINEERING DEPARTMENT

LAKE CHARLENE
DRAINAGE IMPROVEMENTS

PLAN & PROFILE
S. 61 st. AVE.
STA. 47+40.00 - 53+00.00

0 20 40

11 X 17 SCALE: 1" = 40'

SHEET 11

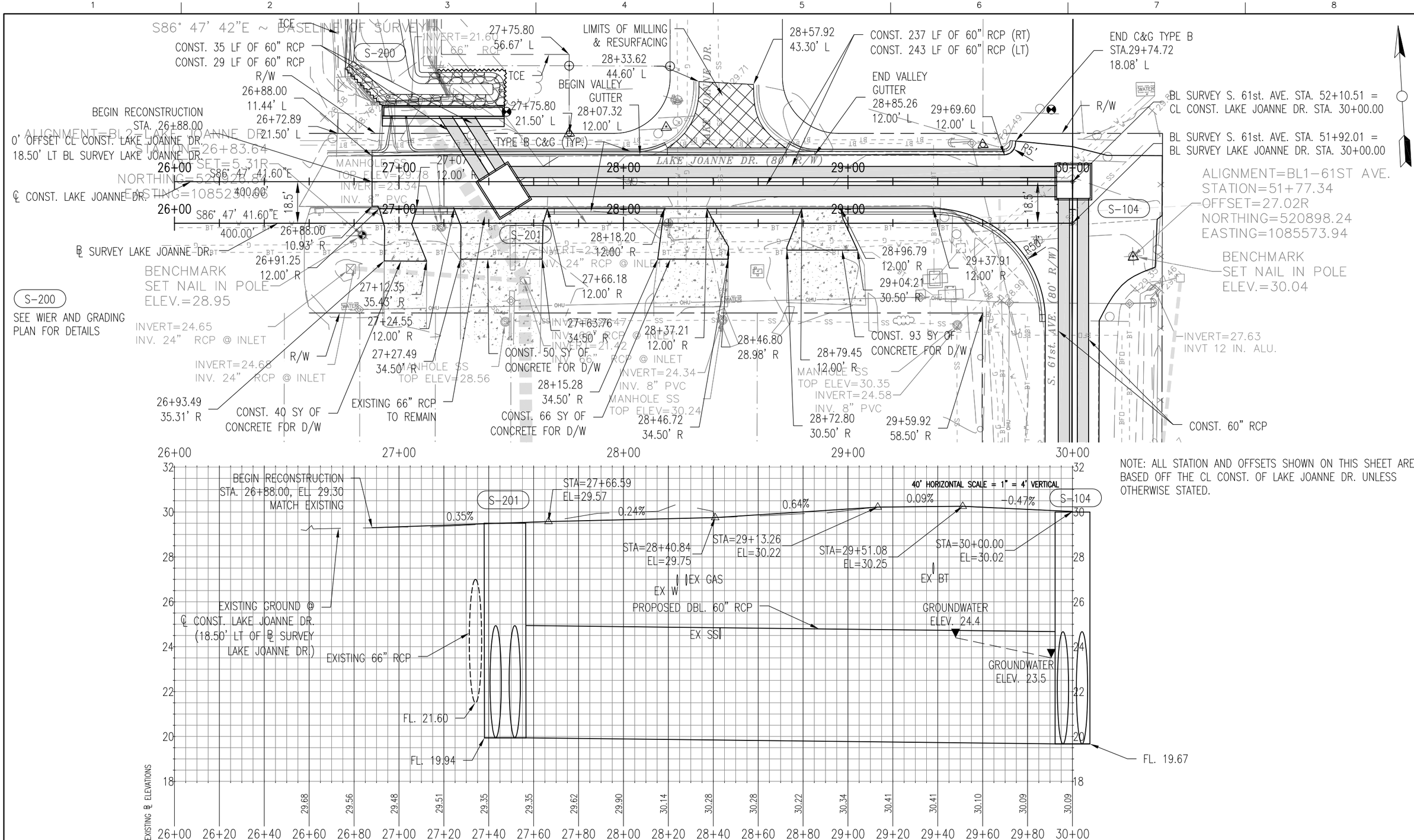

HDR Engineering, Inc.
25 West Cedar Street, Suite 200
Pensacola, FL 32502-5945
(850) 432-6800
www.hdrinc.com
Certificate of Authorization No. 4213

ISSUE	DATE	DESCRIPTION
–	–	–

PROJECT MANAGER	A. VINSON
DESIGNED BY	A. VINSON
DRAWN BY	J. CLARK
CHECKED BY	A. VINSON
PROJECT NUMBER	13-14.081

D. Allen Vinson, P.E.

License No. 72543

ESCAMBIA COUNTY
ENGINEERING DEPARTMENT

LAKE CHARLENE
DRAINAGE IMPROVEMENTS

PLAN & PROFILE
LAKE JOANNE DR.
STA. 26+00.00 - 30+00.00

0 20 40

11 X 17 SCALE: 1" = 40'

SHEET **12**

NOTE: ALL STATION AND OFFSETS ARE BASED OFF
℄ CONST. LAKE JOANNE DR. UNLESS NOTED.

S-200
STA. 27+19.77, 28.33' LT
CONST. STRAIGHT ENDWALL
WITH WEIR
(1) EXISTING 66", (2) 60"
FDOT INDEX NO. 251, 252
FL. 21.60 (EXISTING 66" RCP)
FL. 20.75 (PROPOSED WEIR)
FL. 20.00 (PROPOSED DBL. 60")

S-201
SEE PLAN & PROFILE
LAKE JOANNE DR. AND
DRAINAGE STRUCTURE
SHEETS FOR DETAILS

26+72.88
119.67' L

27+18.88
119.67' L

TCE

TCE

BEGIN SHEET PILE
TIE INTO EXISTING WALL
STA. 26+76.24
50.24' L

27+10.09
49.67' L

27+18.88
56.67' L

BEGIN SHEET PILE
TIE INTO EXISTING WALL
STA. 27+17.14
49.54' L

TCE

27+75.80
56.67' L

R/W

END TYPE B
C&G MATCH EXISTING
28+18.27
17.41' L

S86° 47' 42"E ~ BASELINE OF SURVEY

INVERT=21.60
INV. 66" RCP

SEE SHEET S006 FOR
SHEET PILE WALL PLANS

SEE SHEET S006 FOR
SHEET PILE WALL PLANS

END SHEET PILE
TIE TO PROPOSED
HEADWALL
STA. 26+92.64
33.93' L

R6'
R3'
R1'
R7'
R4'
R6'

27+40.89
42.67' L

END SHEET PILE
TIE TO PROPOSED
HEADWALL
STA. 27+46.89
33.74' L

SEE SHEET S002
FOR HEADWALL DETAILS

R/W

26+72.88
21.67' L

S-200

TCE

27+75.80
21.50' L

BEGIN TYPE B
C&G MATCH EXISTING
26+88.00
11.44' L

R4'

27+08.44
13.30' L

PROPOSED DBL. 60" RCP

ALIGNMENT=BL2-LAKE JOANNE DR.
STATION=26+83.64
OFFSET=5.31R
NORTHING=520926.84
EASTING=1085231.66

MANHOLE SS
TOP ELEV=27.70

R4'

27+20.00
12.00' L

LAKE JOANNE DR. (80' R/W)

26+00

S86° 47' 41.60"E
400.00'

27+00

INVERT=23.34
INV. 8" PVC

26+91.40
13.00' L

S-201

℄ CONST. LAKE JOANNE DR.

18.5'

BEGIN RECONSTRUCTION
STA. 26+88.00
18.50' L

26+00

S86° 47' 41.60"E
400.00'

27+00

28+00

29+00

PROPOSED DBL. 60" RCP

EXISTING 66" RCP TO
REMAIN AND TO BE
CONNECTED TO S-200

℄ SURVEY LAKE JOANNE DR.

INVERT=23.94
INV. 24" RCP @ INLET

BENCHMARK

C:\pwworking\tpa\d1032081\00C-002.dwg, JOANNE-PLAN sheet

HDR Engineering, Inc.
25 West Cedar Street, Suite 200
Pensacola, FL 32502-5945
(850) 432-6800
www.hdrinc.com
Certificate of Authorization No. 4213

ISSUE	DATE	DESCRIPTION
–	–	–

PROJECT MANAGER	A. VINSON
DESIGNED BY	A. VINSON
DRAWN BY	J. CLARK
CHECKED BY	A. VINSON
PROJECT NUMBER	13-14.081

D. Allen Vinson, P.E.
License No. 72543

ESCAMBIA COUNTY
ENGINEERING DEPARTMENT

LAKE CHARLENE
DRAINAGE IMPROVEMENTS

WEIR AND GRADING PLAN
LAKE JOANNE DR.

0 10 20

11 X 17
SCALE: 1" = 20'

SHEET
13

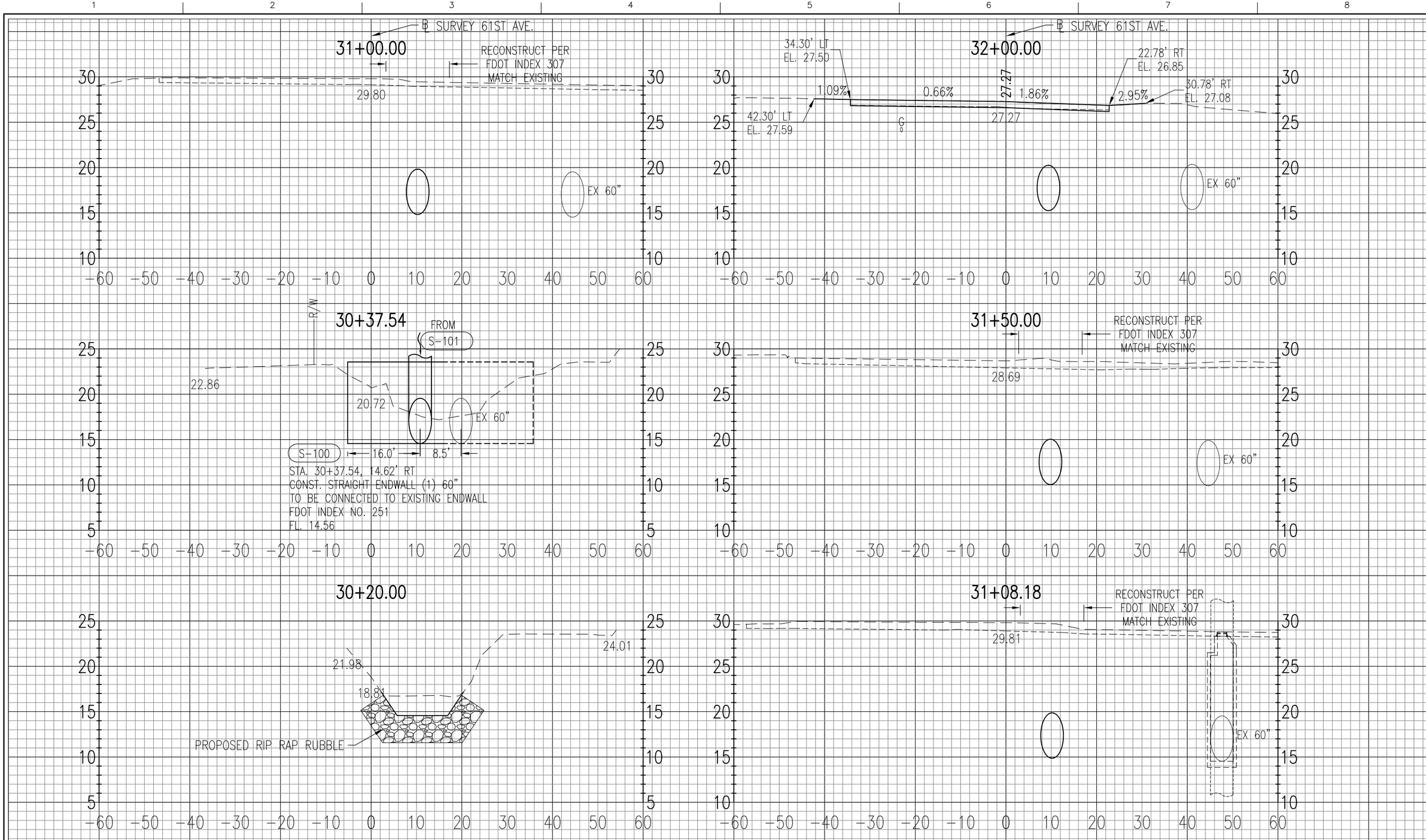

HDR Engineering, Inc.
25 West Cedar Street, Suite 200
Pensacola, FL 32502-5945
(850) 432-6800
www.hdrinc.com
Certificate of Authorization No. 4213

ISSUE	DATE	DESCRIPTION
–	–	–

PROJECT MANAGER	A. VINSON
DESIGNED BY	J. CLARK
DRAWN BY	J. CLARK
CHECKED BY	J. BURCHFIELD
PROJECT NUMBER	PD 13-14.081

D. Allen Vinson, P.E.

License No. 72543

ESCAMBIA COUNTY
ENGINEERING DEPARTMENT

LAKE CHARLENE AREA
DRAINAGE IMPROVEMENTS

CROSS SECTIONS
61ST AVE.

0 10 20

11 X 17 SCALE: HORZ: 1" = 20'
VERT: 1" = 10'

SHEET
14

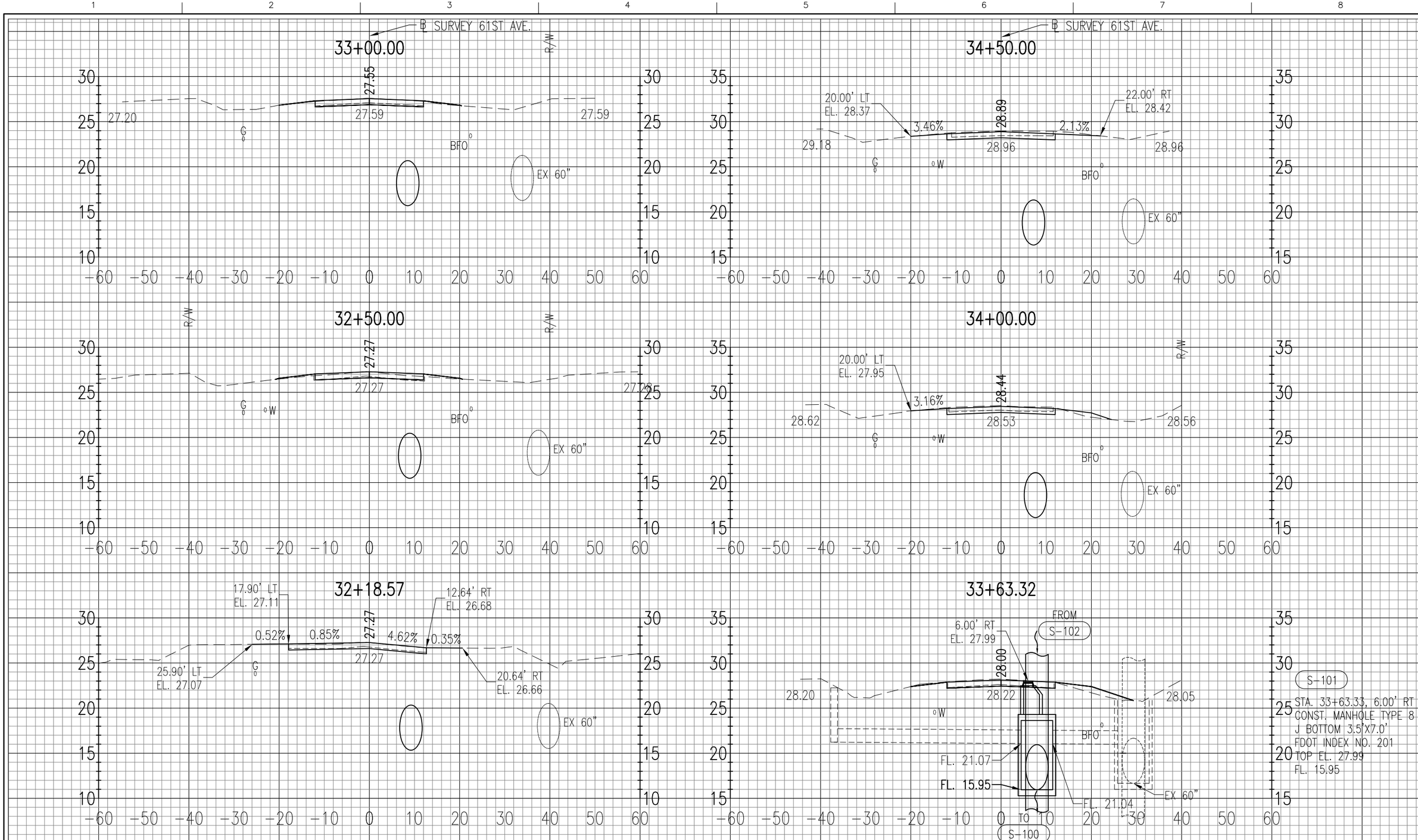

HDR Engineering, Inc.
25 West Cedar Street, Suite 200
Pensacola, FL 32502-5945
(850) 432-6800
www.hdrinc.com
Certificate of Authorization No. 4213

ISSUE	DATE	DESCRIPTION
–	–	–

PROJECT MANAGER	A. VINSON
DESIGNED BY	J. CLARK
DRAWN BY	J. CLARK
CHECKED BY	J. BURCHFIELD
PROJECT NUMBER	PD 13-14.081

D. Allen Vinson, P.E.

License No. 72543

ESCAMBIA COUNTY ENGINEERING DEPARTMENT

LAKE CHARLENE AREA DRAINAGE IMPROVEMENTS

CROSS SECTIONS 61ST AVE.

0 10 20

11 X 17 SCALE:

HORZ: 1" = 20'

VERT: 1" = 10'

SHEET 15

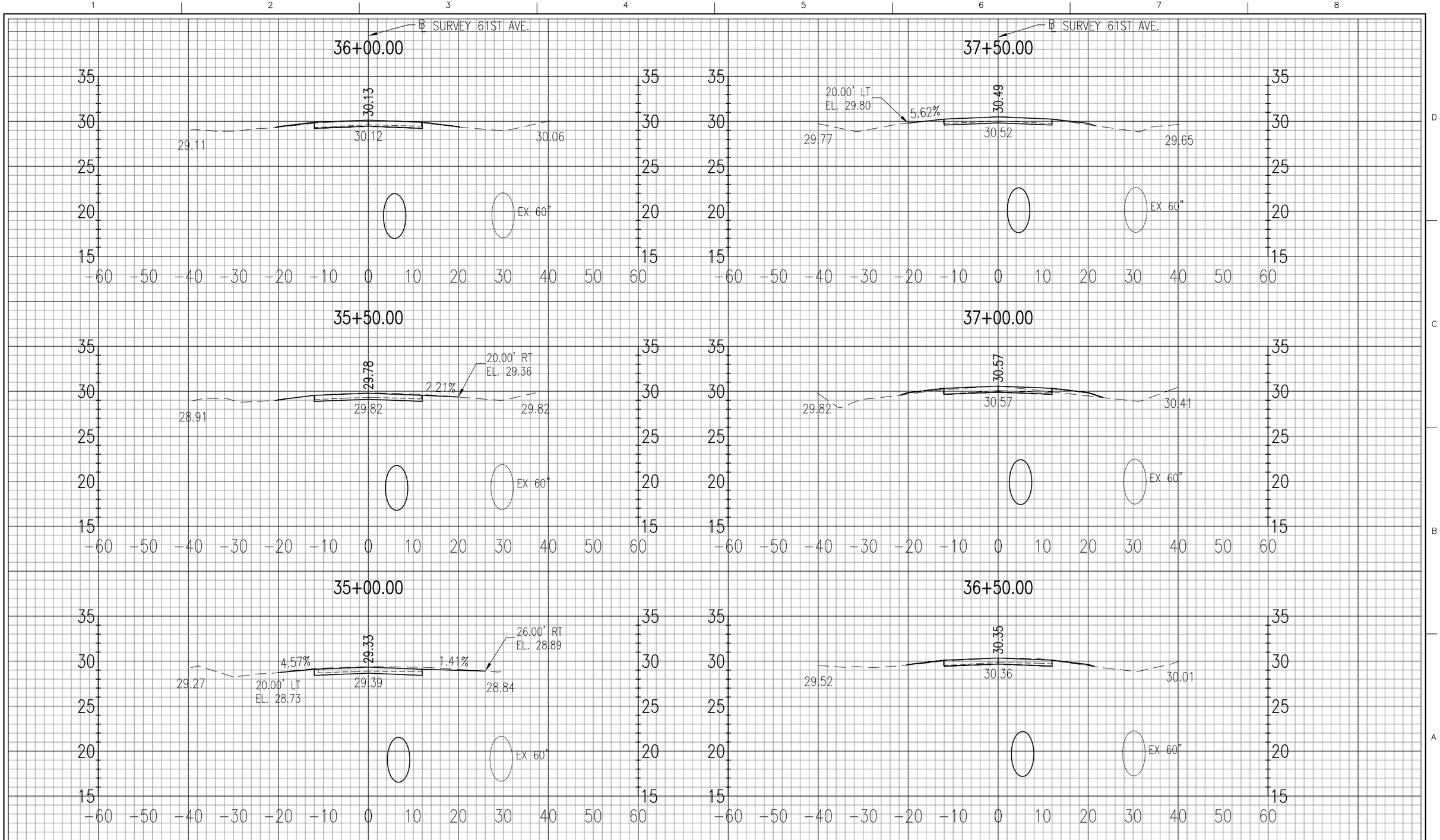

HDR Engineering, Inc.
25 West Cedar Street, Suite 200
Pensacola, FL 32502-5945
(850) 432-6800
www.hdrinc.com
Certificate of Authorization No. 4213

ISSUE	DATE	DESCRIPTION
–	–	–

PROJECT MANAGER	A. VINSON
DESIGNED BY	J. CLARK
DRAWN BY	J. CLARK
CHECKED BY	J. BURCHFIELD
PROJECT NUMBER	PD 13–14.081

D. Allen Vinson, P.E.

License No. 72543

ESCAMBIA COUNTY ENGINEERING DEPARTMENT

LAKE CHARLENE AREA DRAINAGE IMPROVEMENTS

CROSS SECTIONS 61ST AVE.

0 10 20

11 X 17 SCALE: HORZ: 1" = 20' VERT: 1" = 10'

SHEET 16

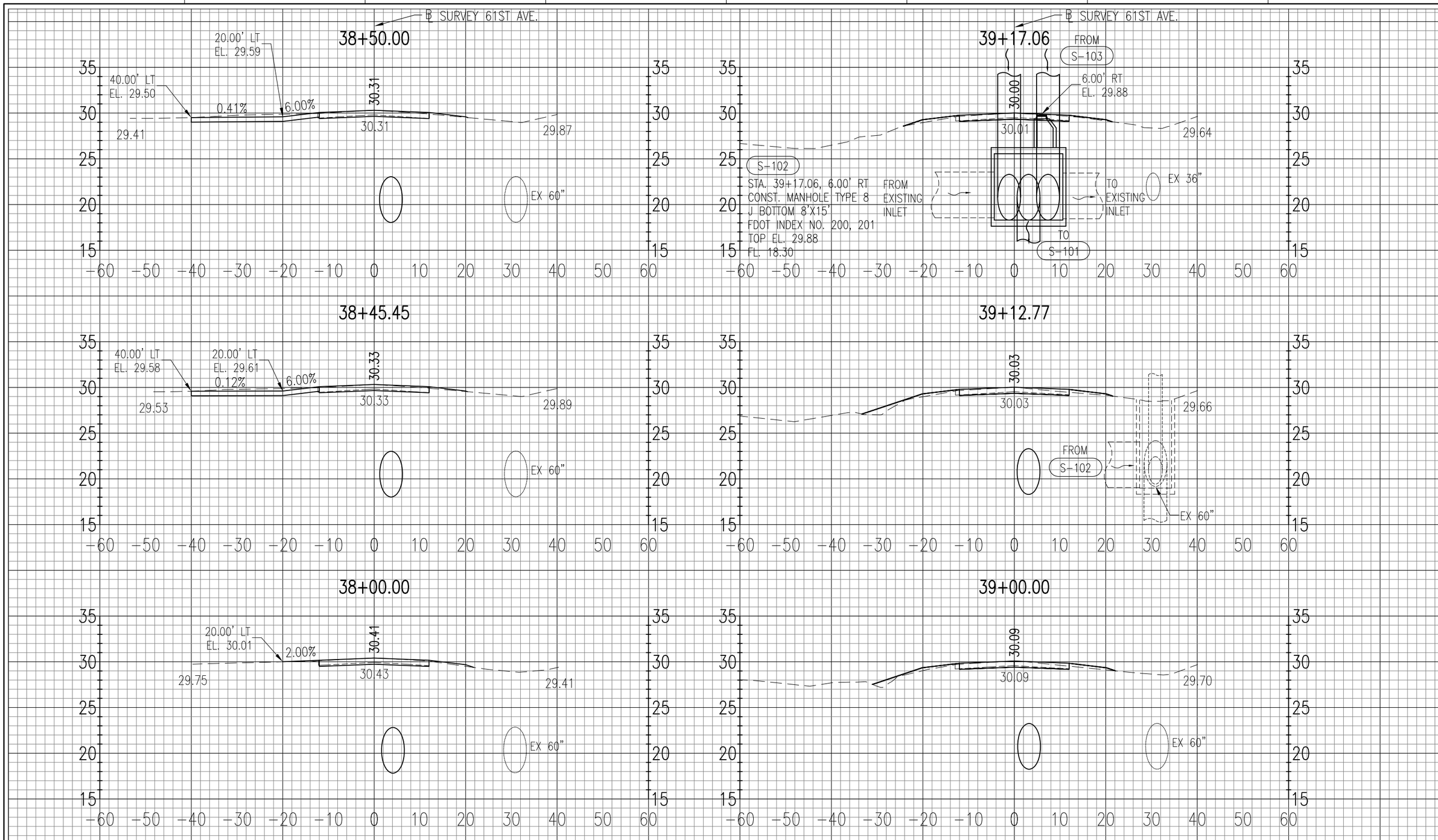

HDR

HDR Engineering, Inc.
25 West Cedar Street, Suite 200
Pensacola, FL 32502-5945
(850) 432-6800
www.hdrinc.com
Certificate of Authorization No. 4213

ISSUE	DATE	DESCRIPTION
–	–	–

PROJECT MANAGER	A. VINSON
DESIGNED BY	J. CLARK
DRAWN BY	J. CLARK
CHECKED BY	J. BURCHFIELD
PROJECT NUMBER	PD 13-14.081

D. Allen Vinson, P.E.

License No. 72543

ESCAMBIA COUNTY
ENGINEERING DEPARTMENT

LAKE CHARLENE AREA
DRAINAGE IMPROVEMENTS

CROSS SECTIONS
61ST AVE.

0 10 20

11 X 17 SCALE:
HORZ: 1" = 20'
VERT: 1" = 10'

SHEET
17

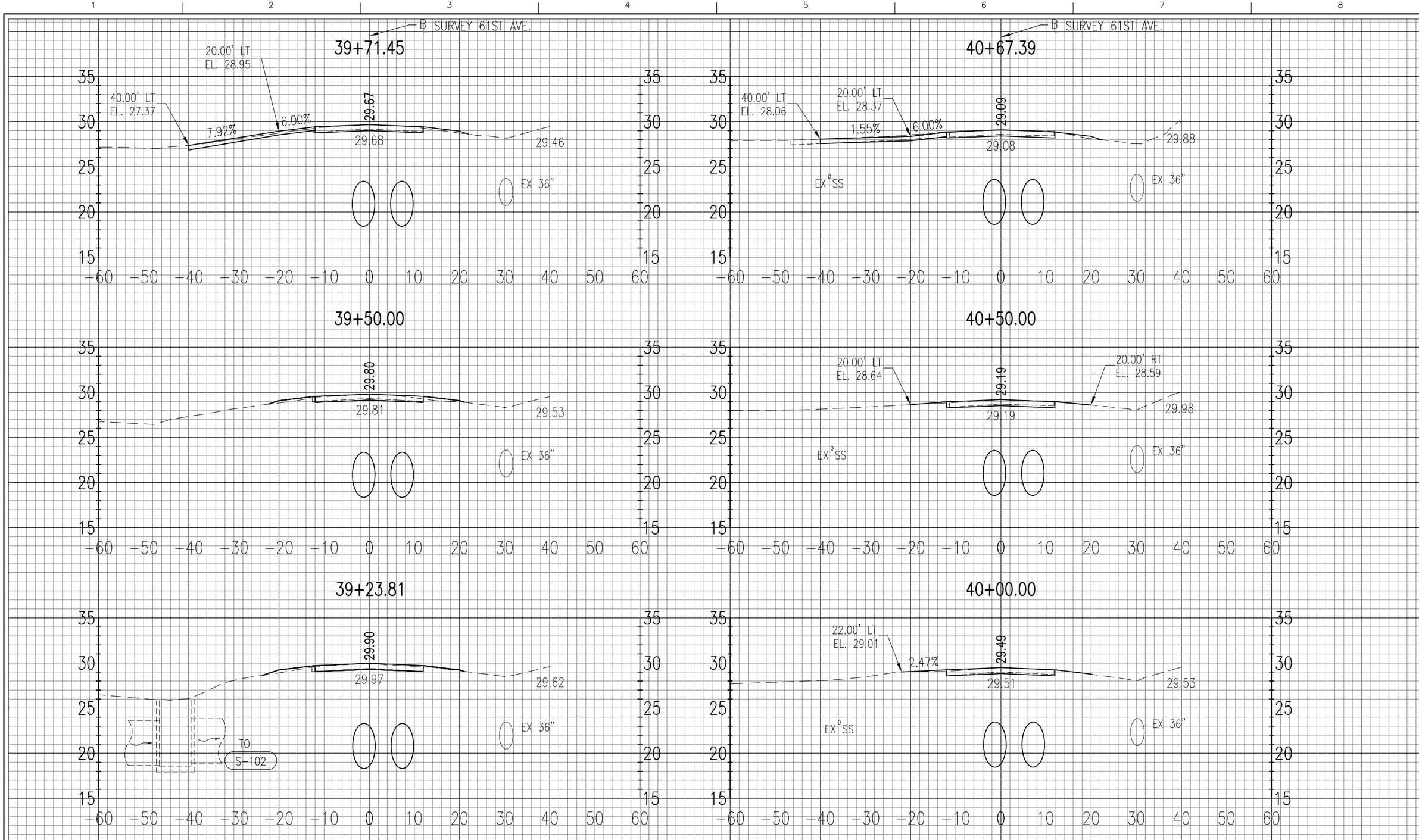

HDR Engineering, Inc.
25 West Cedar Street, Suite 200
Pensacola, FL 32502-5945
(850) 432-6800
www.hdrinc.com
Certificate of Authorization No. 4213

ISSUE	DATE	DESCRIPTION
–	–	–

PROJECT MANAGER	A. VINSON
DESIGNED BY	J. CLARK
DRAWN BY	J. CLARK
CHECKED BY	J. BURCHFIELD
PROJECT NUMBER	PD 13-14.081

D. Allen Vinson, P.E.

License No. 72543

ESCAMBIA COUNTY FLORIDA

ESCAMBIA COUNTY
ENGINEERING DEPARTMENT

LAKE CHARLENE AREA
DRAINAGE IMPROVEMENTS

CROSS SECTIONS
61ST AVE.

0 10 20

11 X 17 SCALE:
HORZ: 1" = 20'
VERT: 1" = 10'

SHEET
18

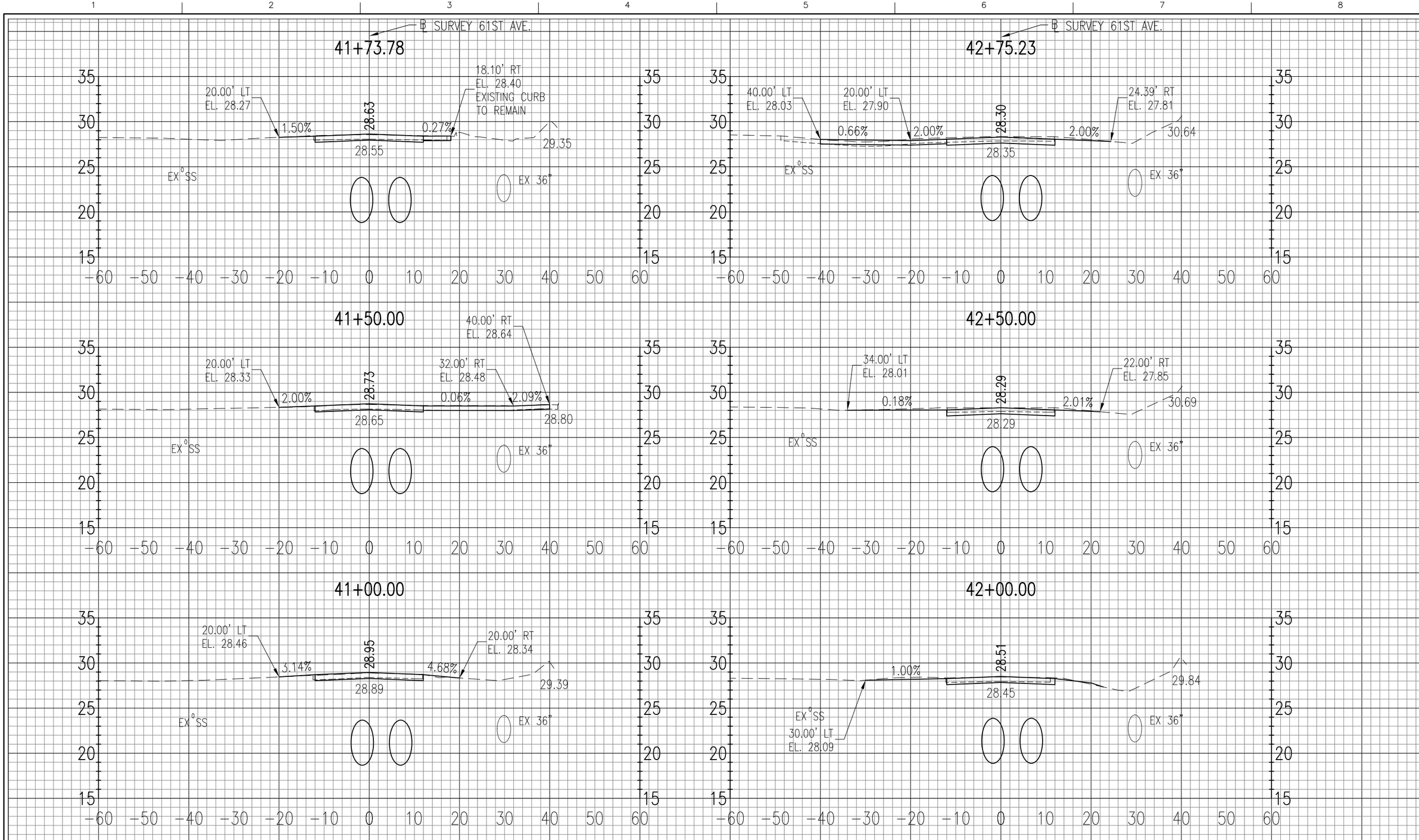

HDR Engineering, Inc.
25 West Cedar Street, Suite 200
Pensacola, FL 32502-5945
(850) 432-6800
www.hdrinc.com
Certificate of Authorization No. 4213

ISSUE	DATE	DESCRIPTION
–	–	–

PROJECT MANAGER	A. VINSON
DESIGNED BY	J. CLARK
DRAWN BY	J. CLARK
CHECKED BY	J. BURCHFIELD
PROJECT NUMBER	PD 13-14.081

D. Allen Vinson, P.E.

License No. 72543

ESCAMBIA COUNTY
ENGINEERING DEPARTMENT

LAKE CHARLENE AREA
DRAINAGE IMPROVEMENTS

CROSS SECTIONS 61ST AVE.

0 10 20

11 X 17 SCALE:

HORZ: 1" = 20'

VERT: 1" = 10'

SHEET 19

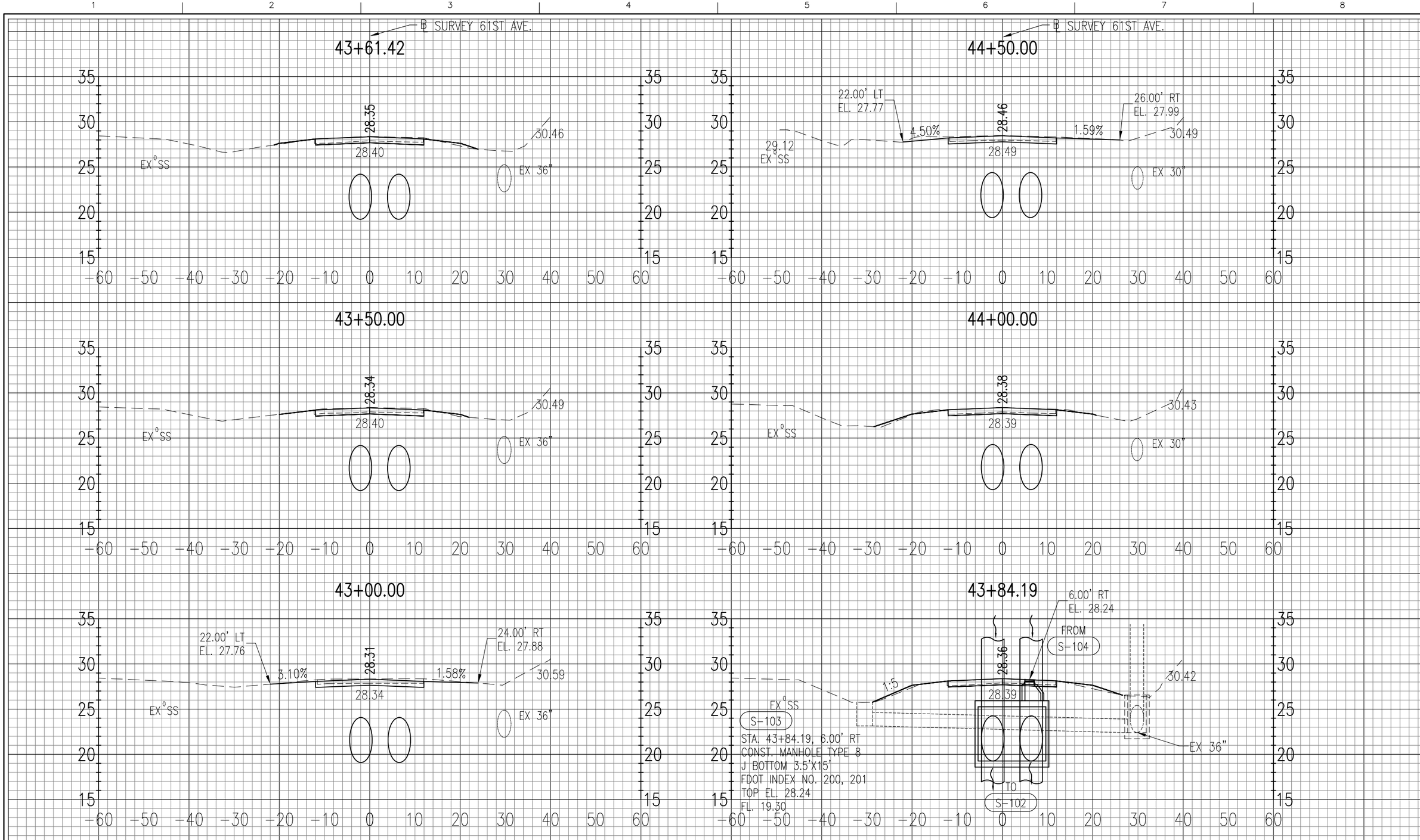

HDR Engineering, Inc.
25 West Cedar Street, Suite 200
Pensacola, FL 32502-5945
(850) 432-6800
www.hdrinc.com
Certificate of Authorization No. 4213

ISSUE	DATE	DESCRIPTION
–	–	–

PROJECT MANAGER	A. VINSON
DESIGNED BY	J. CLARK
DRAWN BY	J. CLARK
CHECKED BY	J. BURCHFIELD
PROJECT NUMBER	PD 13-14.081

D. Allen Vinson, P.E.

License No. 72543

ESCAMBIA COUNTY FLORIDA

ESCAMBIA COUNTY
ENGINEERING DEPARTMENT

LAKE CHARLENE AREA
DRAINAGE IMPROVEMENTS

CROSS SECTIONS
61ST AVE.

0 10 20

11 X 17 SCALE:
HORZ: 1" = 20'
VERT: 1" = 10'

SHEET
20

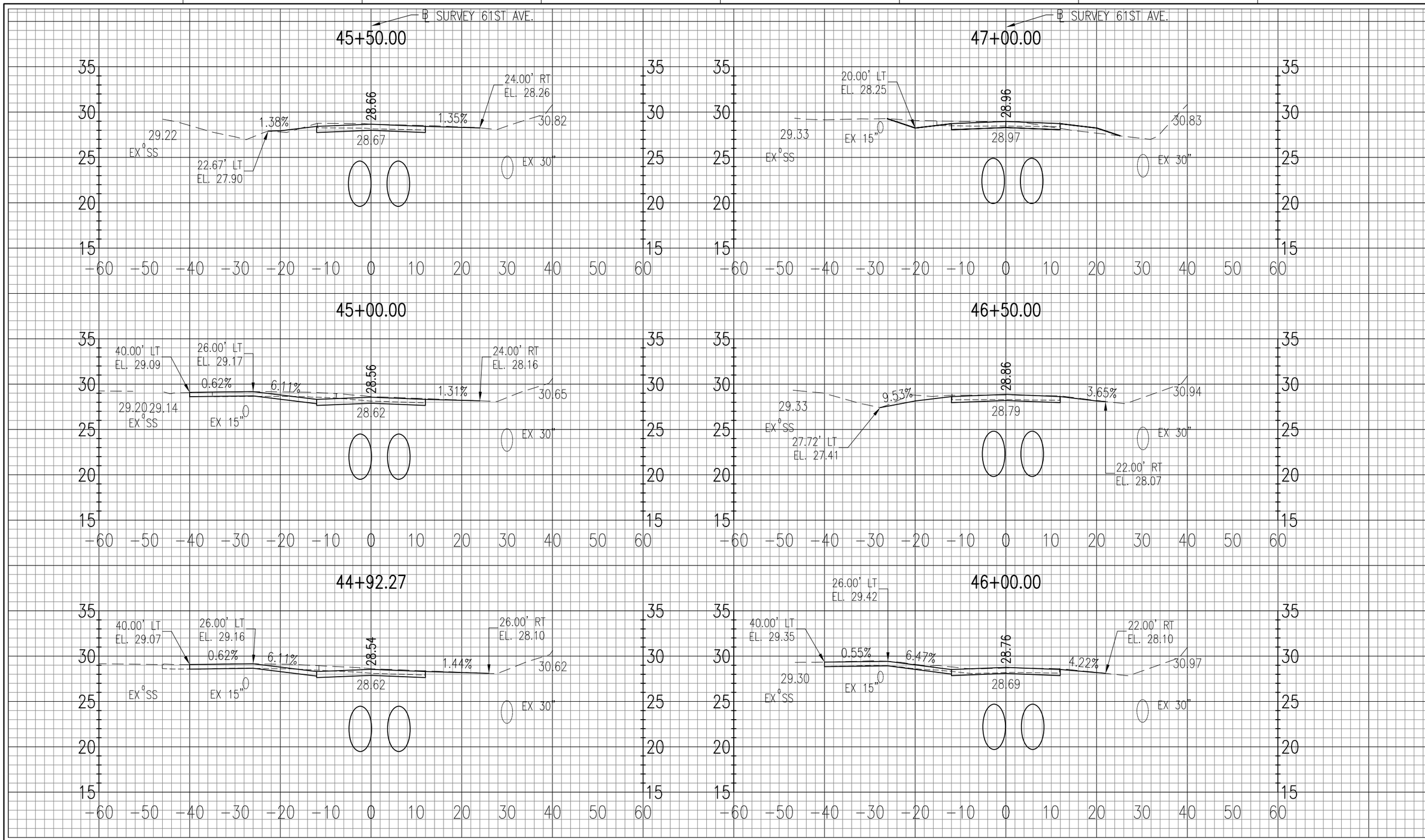

HDR Engineering, Inc.
25 West Cedar Street, Suite 200
Pensacola, FL 32502-5945
(850) 432-6800
www.hdrinc.com
Certificate of Authorization No. 4213

ISSUE	DATE	DESCRIPTION
–	–	–

PROJECT MANAGER	A. VINSON
DESIGNED BY	J. CLARK
DRAWN BY	J. CLARK
CHECKED BY	J. BURCHFIELD
PROJECT NUMBER	PD 13–14.081

D. Allen Vinson, P.E.
License No. 72543

ESCAMBIA COUNTY FLORIDA

ESCAMBIA COUNTY
ENGINEERING DEPARTMENT

LAKE CHARLENE AREA
DRAINAGE IMPROVEMENTS

CROSS SECTIONS
61ST AVE.

0 10 20

11 X 17 SCALE:
HORZ: 1" = 20'
VERT: 1" = 10'

SHEET
21

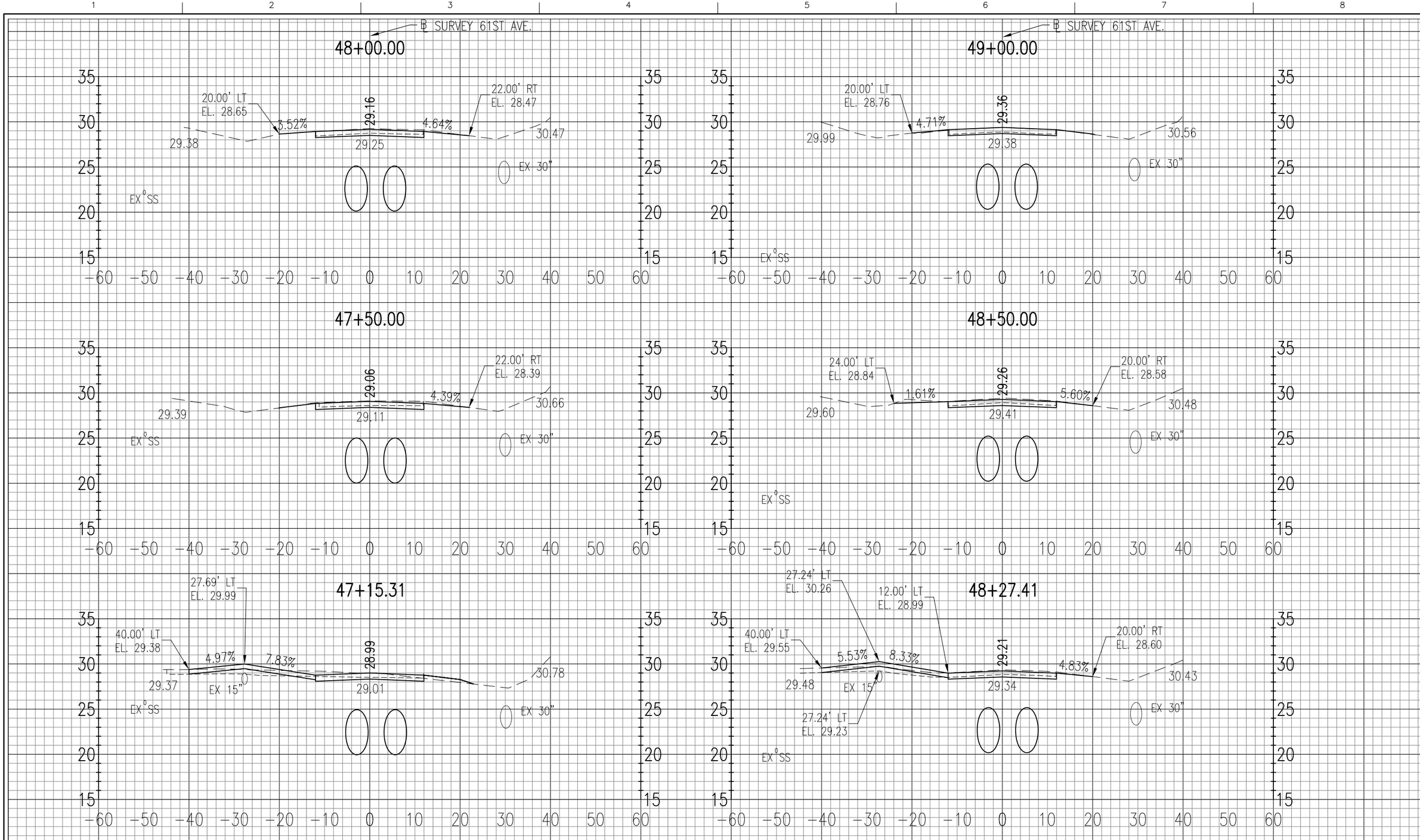

HDR Engineering, Inc.
25 West Cedar Street, Suite 200
Pensacola, FL 32502-5945
(850) 432-6800
www.hdrinc.com
Certificate of Authorization No. 4213

ISSUE	DATE	DESCRIPTION
–	–	–

PROJECT MANAGER	A. VINSON
DESIGNED BY	J. CLARK
DRAWN BY	J. CLARK
CHECKED BY	J. BURCHFIELD
PROJECT NUMBER	PD 13–14.081

D. Allen Vinson, P.E.

License No. 72543

ESCAMBIA COUNTY
ENGINEERING DEPARTMENT

LAKE CHARLENE AREA
DRAINAGE IMPROVEMENTS

CROSS SECTIONS
61ST AVE.

0 10 20

11 X 17 SCALE:

HORZ: 1" = 20'

VERT: 1" = 10'

SHEET 22

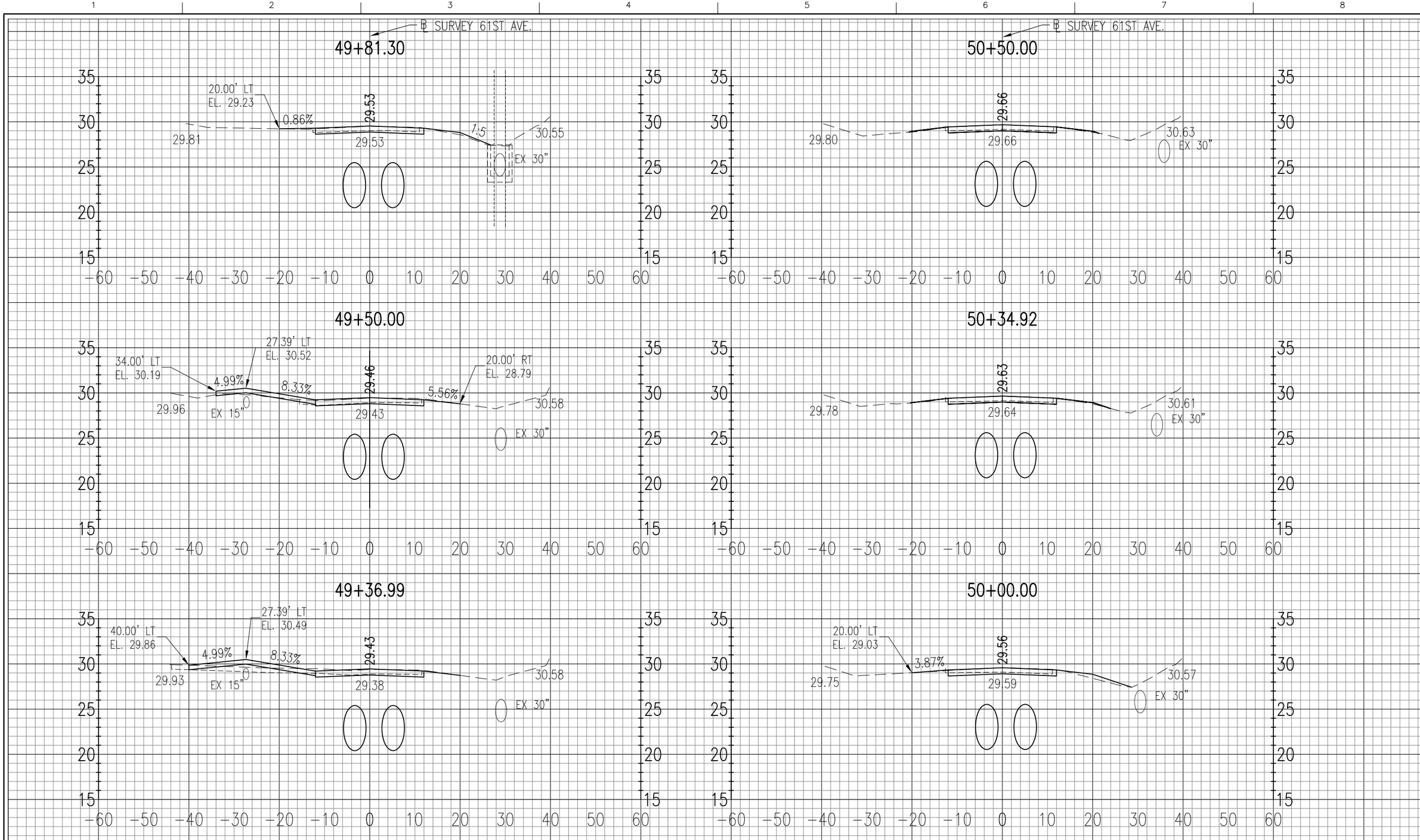

HDR Engineering, Inc.
25 West Cedar Street, Suite 200
Pensacola, FL 32502-5945
(850) 432-6800
www.hdrinc.com
Certificate of Authorization No. 4213

ISSUE	DATE	DESCRIPTION
–	–	–

PROJECT MANAGER	A. VINSON
DESIGNED BY	J. CLARK
DRAWN BY	J. CLARK
CHECKED BY	J. BURCHFIELD
PROJECT NUMBER	PD 13–14.081

D. Allen Vinson, P.E.

License No. 72543

ESCAMBIA COUNTY
ENGINEERING DEPARTMENT

LAKE CHARLENE AREA
DRAINAGE IMPROVEMENTS

CROSS SECTIONS 61ST AVE.

0 10 20

11 X 17 SCALE:

HORZ: 1" = 20'

VERT: 1" = 10'

SHEET 23

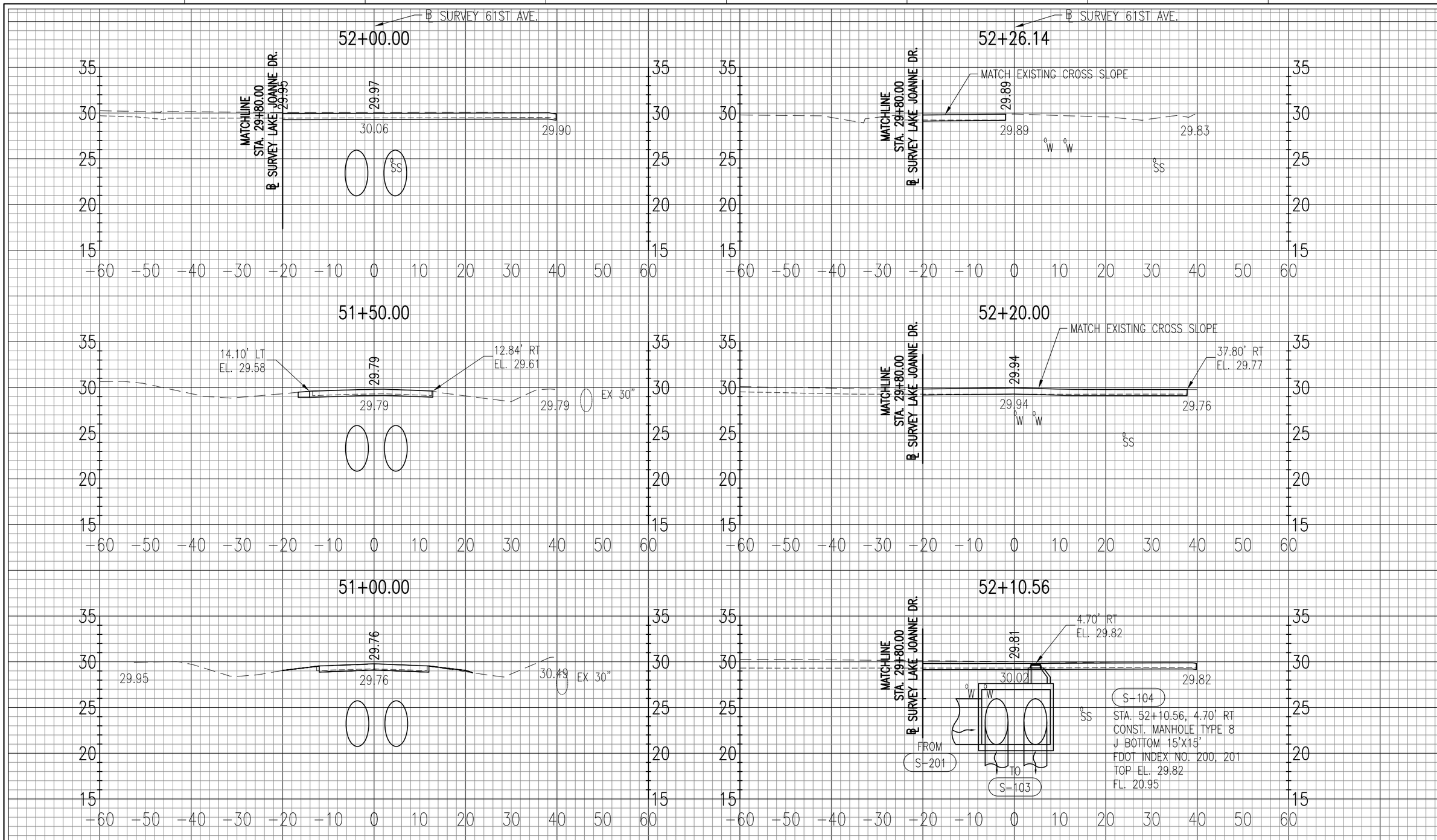

HDR Engineering, Inc.
25 West Cedar Street, Suite 200
Pensacola, FL 32502-5945
(850) 432-6800
www.hdrinc.com
Certificate of Authorization No. 4213

ISSUE	DATE	DESCRIPTION
–	–	–

PROJECT MANAGER	A. VINSON
DESIGNED BY	J. CLARK
DRAWN BY	J. CLARK
CHECKED BY	J. BURCHFIELD
PROJECT NUMBER	PD 13-14.081

D. Allen Vinson, P.E.

License No. 72543

ESCAMBIA COUNTY
ENGINEERING DEPARTMENT

LAKE CHARLENE AREA
DRAINAGE IMPROVEMENTS

CROSS SECTIONS
61ST AVE.

0 10 20

11 X 17 SCALE:

HORZ: 1" = 20'

VERT: 1" = 10'

SHEET 24

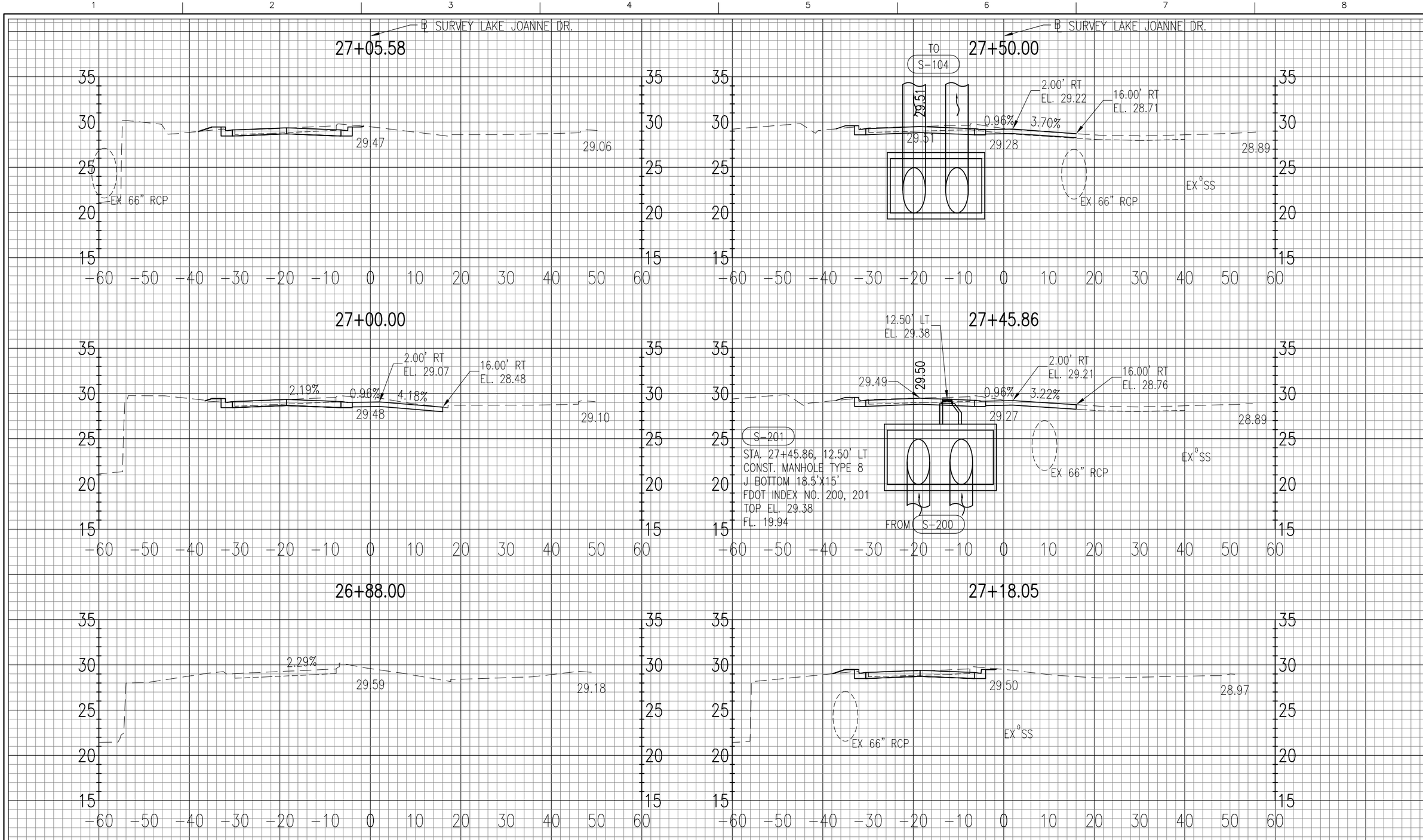

HDR Engineering, Inc.
25 West Cedar Street, Suite 200
Pensacola, FL 32502-5945
(850) 432-6800
www.hdrinc.com
Certificate of Authorization No. 4213

ISSUE	DATE	DESCRIPTION
–	–	–

PROJECT MANAGER	A. VINSON
DESIGNED BY	J. CLARK
DRAWN BY	J. CLARK
CHECKED BY	J. BURCHFIELD
PROJECT NUMBER	PD 13-14.081

D. Allen Vinson, P.E.

License No. 72543

ESCAMBIA COUNTY ENGINEERING DEPARTMENT

LAKE CHARLENE AREA DRAINAGE IMPROVEMENTS

CROSS SECTIONS LAKE JOANNE DR.

0 10 20

11 X 17 SCALE: HORZ: 1" = 20' VERT: 1" = 10'

SHEET 25

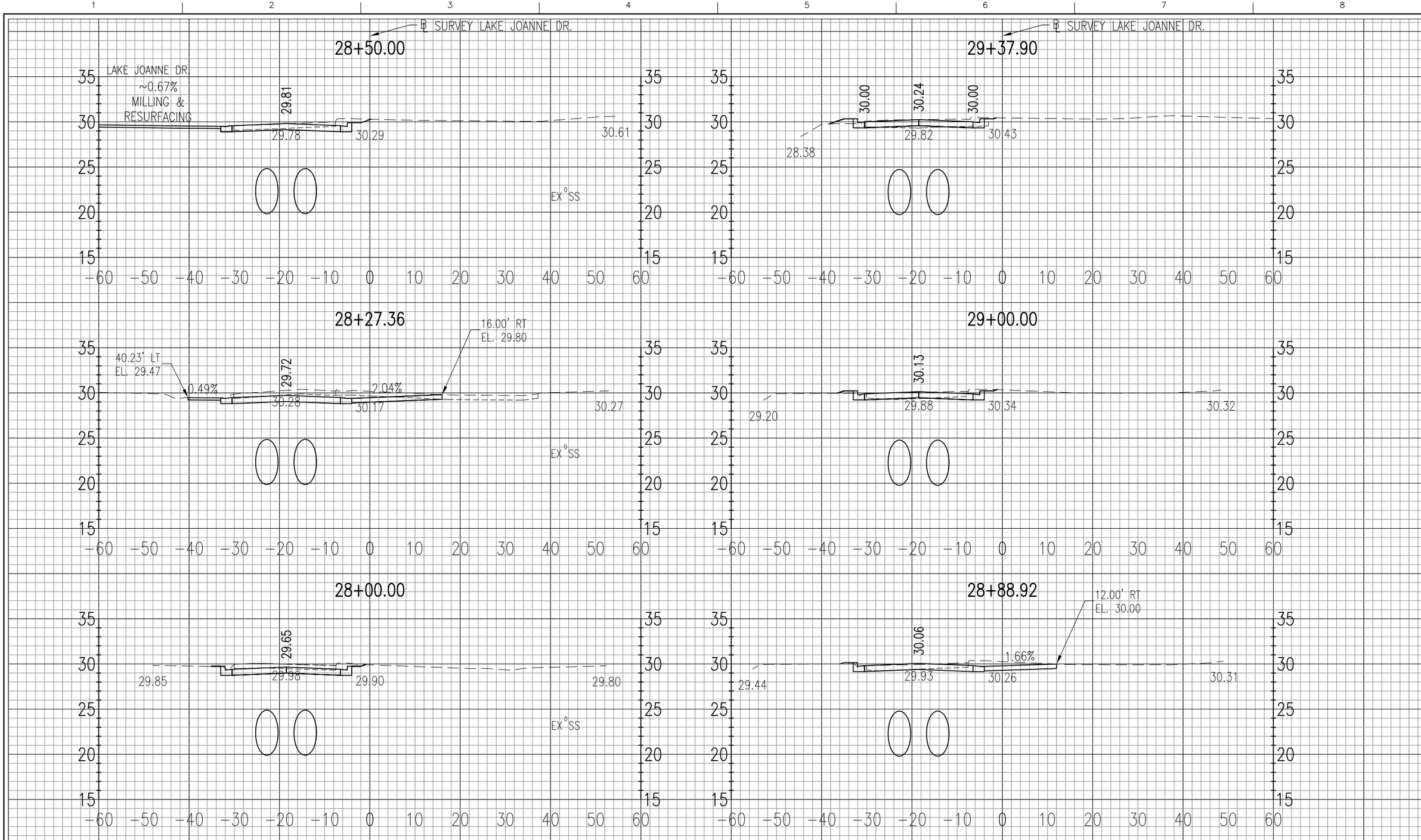

HDR Engineering, Inc.
25 West Cedar Street, Suite 200
Pensacola, FL 32502-5945
(850) 432-6800
www.hdrinc.com
Certificate of Authorization No. 4213

ISSUE	DATE	DESCRIPTION
–	–	–

PROJECT MANAGER	A. VINSON
DESIGNED BY	J. CLARK
DRAWN BY	J. CLARK
CHECKED BY	J. BURCHFIELD
PROJECT NUMBER	PD 13–14.081

D. Allen Vinson, P.E.

License No. 72543

ESCAMBIA COUNTY
ENGINEERING DEPARTMENT

LAKE CHARLENE AREA
DRAINAGE IMPROVEMENTS

CROSS SECTIONS
LAKE JOANNE DR.

0 10 20

11 X 17 SCALE:

HORZ: 1" = 20'

VERT: 1" = 10'

SHEET 26

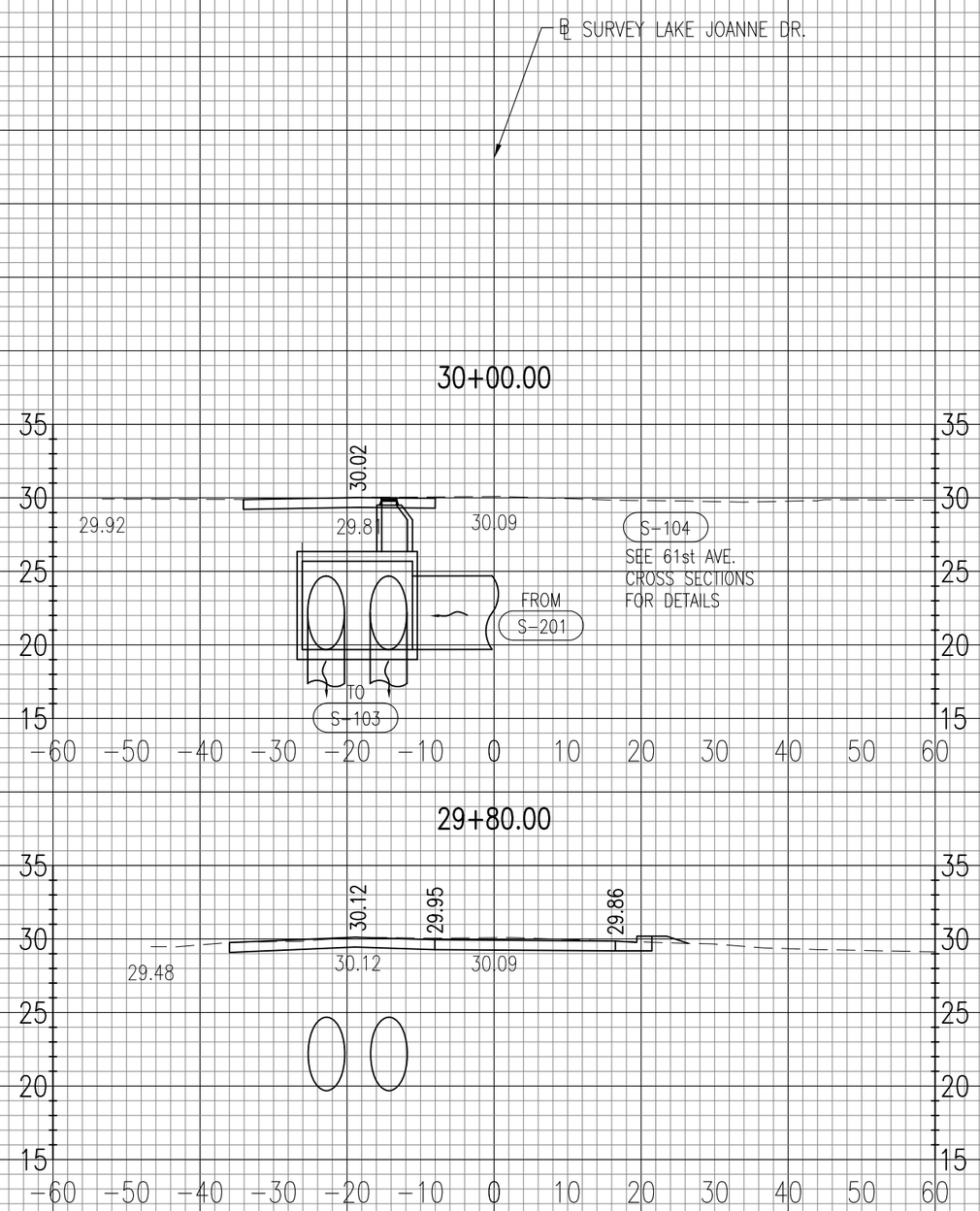

HDR Engineering, Inc.
25 West Cedar Street, Suite 200
Pensacola, FL 32502-5945
(850) 432-6800
www.hdrinc.com
Certificate of Authorization No. 4213

ISSUE	DATE	DESCRIPTION
–	–	–

PROJECT MANAGER	A. VINSON
DESIGNED BY	J. CLARK
DRAWN BY	J. CLARK
CHECKED BY	J. BURCHFIELD
PROJECT NUMBER	PD 13-14.081

D. Allen Vinson, P.E.

License No. 72543

ESCAMBIA COUNTY
ENGINEERING DEPARTMENT

LAKE CHARLENE AREA
DRAINAGE IMPROVEMENTS

CROSS SECTIONS
LAKE JOANNE DR.

0 10 20

11 X 17 SCALE:
HORZ: 1" = 20'
VERT: 1" = 10'

SHEET
27

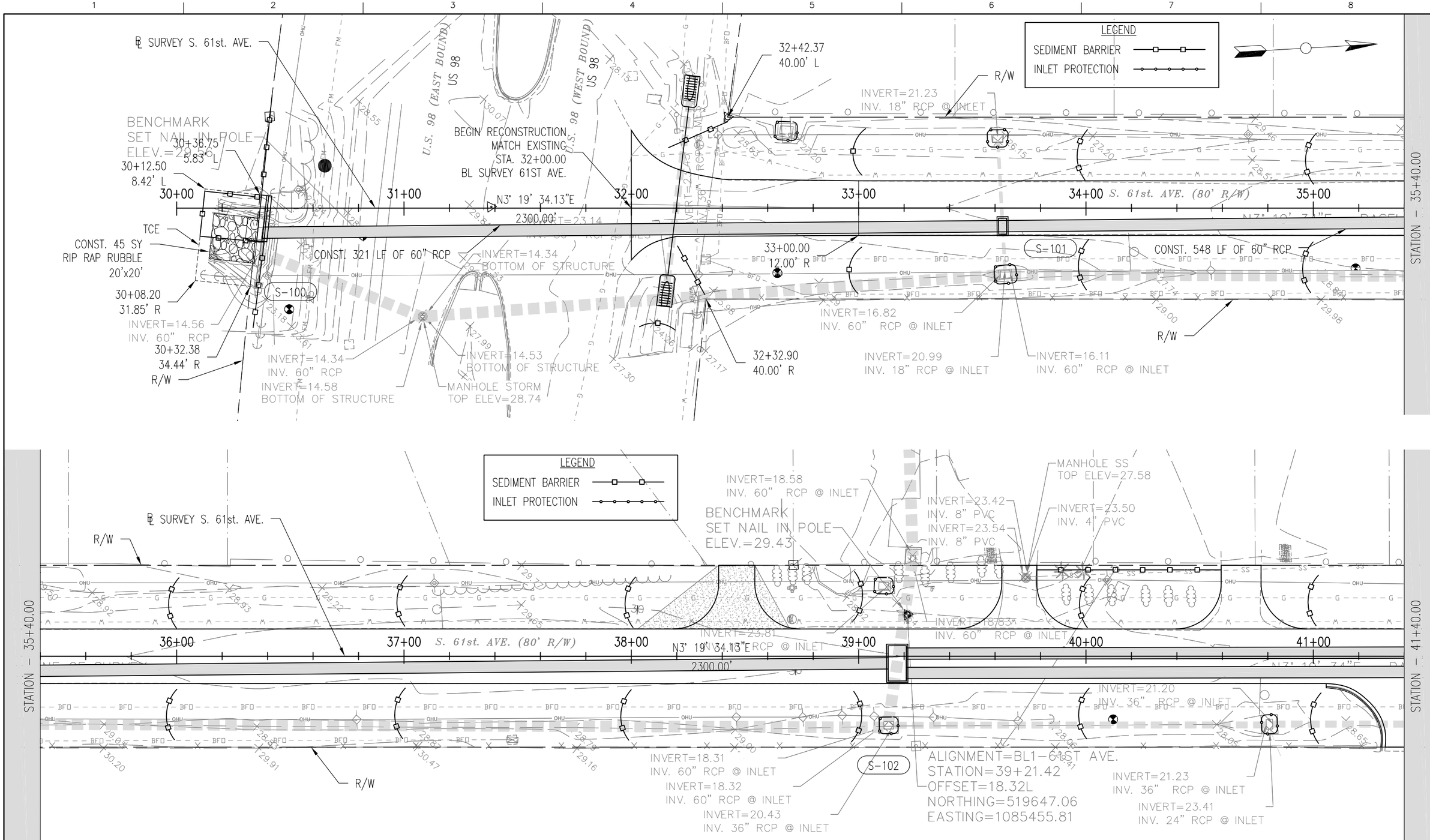

HDR Engineering, Inc.
25 West Cedar Street, Suite 200
Pensacola, FL 32502-5945
(850) 432-6800
www.hdrinc.com
Certificate of Authorization No. 4213

ISSUE	DATE	DESCRIPTION
–	–	–

PROJECT MANAGER	A. VINSON
DESIGNED BY	A. VINSON
DRAWN BY	J. CLARK
CHECKED BY	A. VINSON
PROJECT NUMBER	13-14.081

D. Allen Vinson, P.E.

License No. 72543

ESCAMBIA COUNTY
ENGINEERING DEPARTMENT

LAKE CHARLENE
DRAINAGE IMPROVEMENTS

EROSION CONTROL PLAN
S. 61 st. AVE.
STA. 30+00.00 - 41+40.00

0 20 40

11 X 17 SCALE: 1" = 40'

SHEET 28

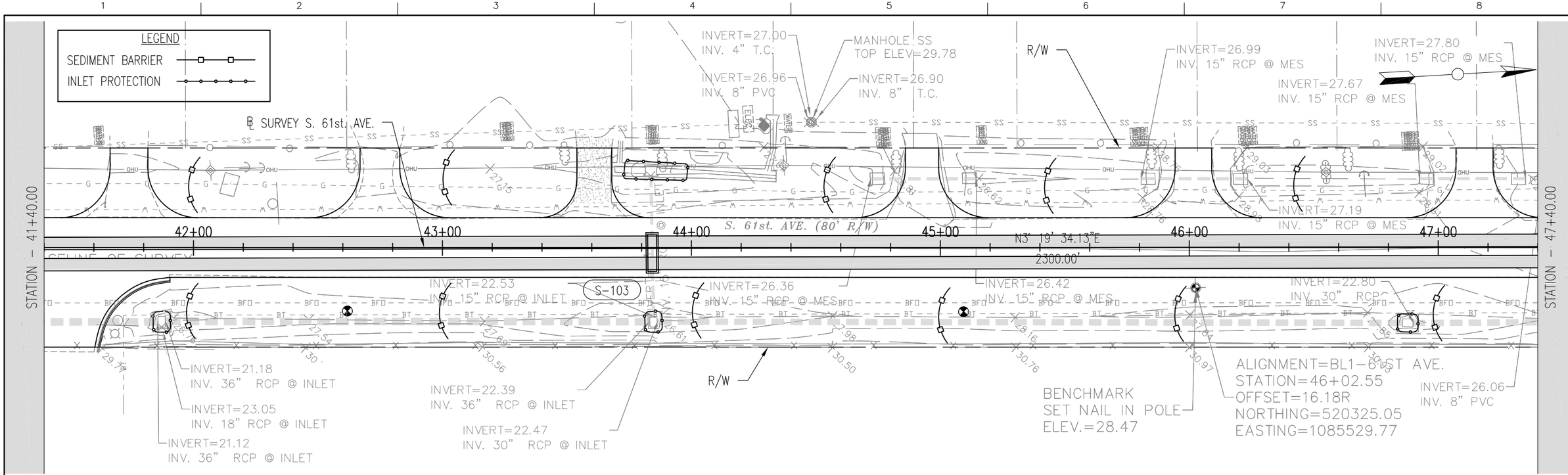

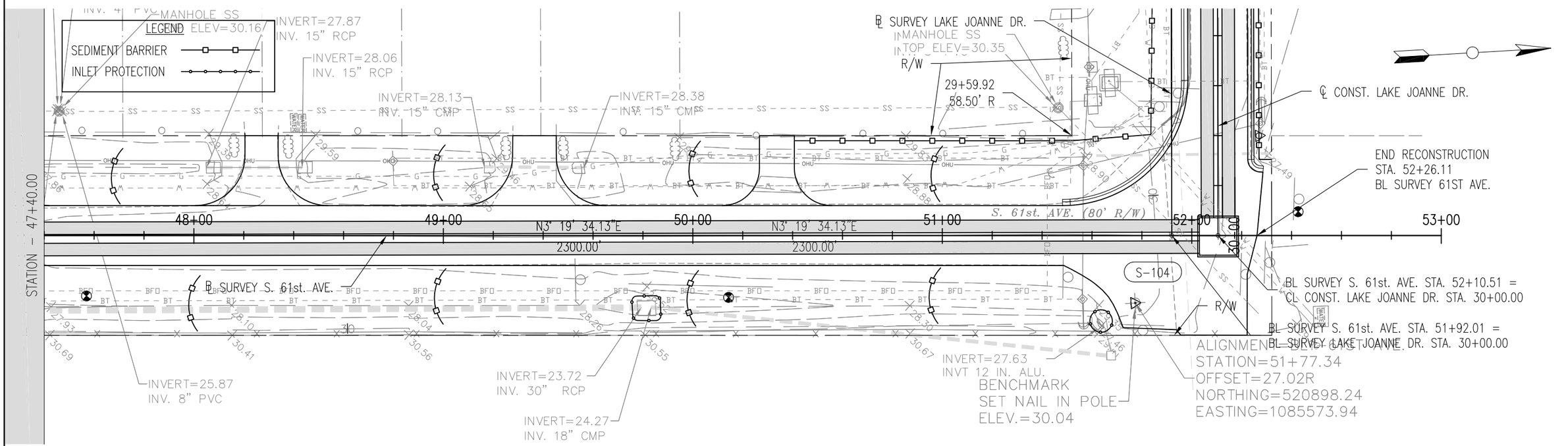

HDR Engineering, Inc.
25 West Cedar Street, Suite 200
Pensacola, FL 32502-5945
(850) 432-6800
www.hdrinc.com
Certificate of Authorization No. 4213

ISSUE	DATE	DESCRIPTION
–	–	–

PROJECT MANAGER	A. VINSON
DESIGNED BY	A. VINSON
DRAWN BY	J. CLARK
CHECKED BY	A. VINSON
PROJECT NUMBER	13-14.081

D. Allen Vinson, P.E.

License No. 72543

ESCAMBIA COUNTY ENGINEERING DEPARTMENT

LAKE CHARLENE DRAINAGE IMPROVEMENTS

EROSION CONTROL PLAN
S. 61 st. AVE.
STA. 41+40.00 - 53+00.00

0 20 40

11 X 17 SCALE: 1" = 40'

SHEET 29

NOTE: ALL STATION AND OFFSETS SHOWN ON THIS SHEET ARE BASED OFF THE CL CONST. OF LAKE JOANNE DR. UNLESS OTHERWISE STATED.

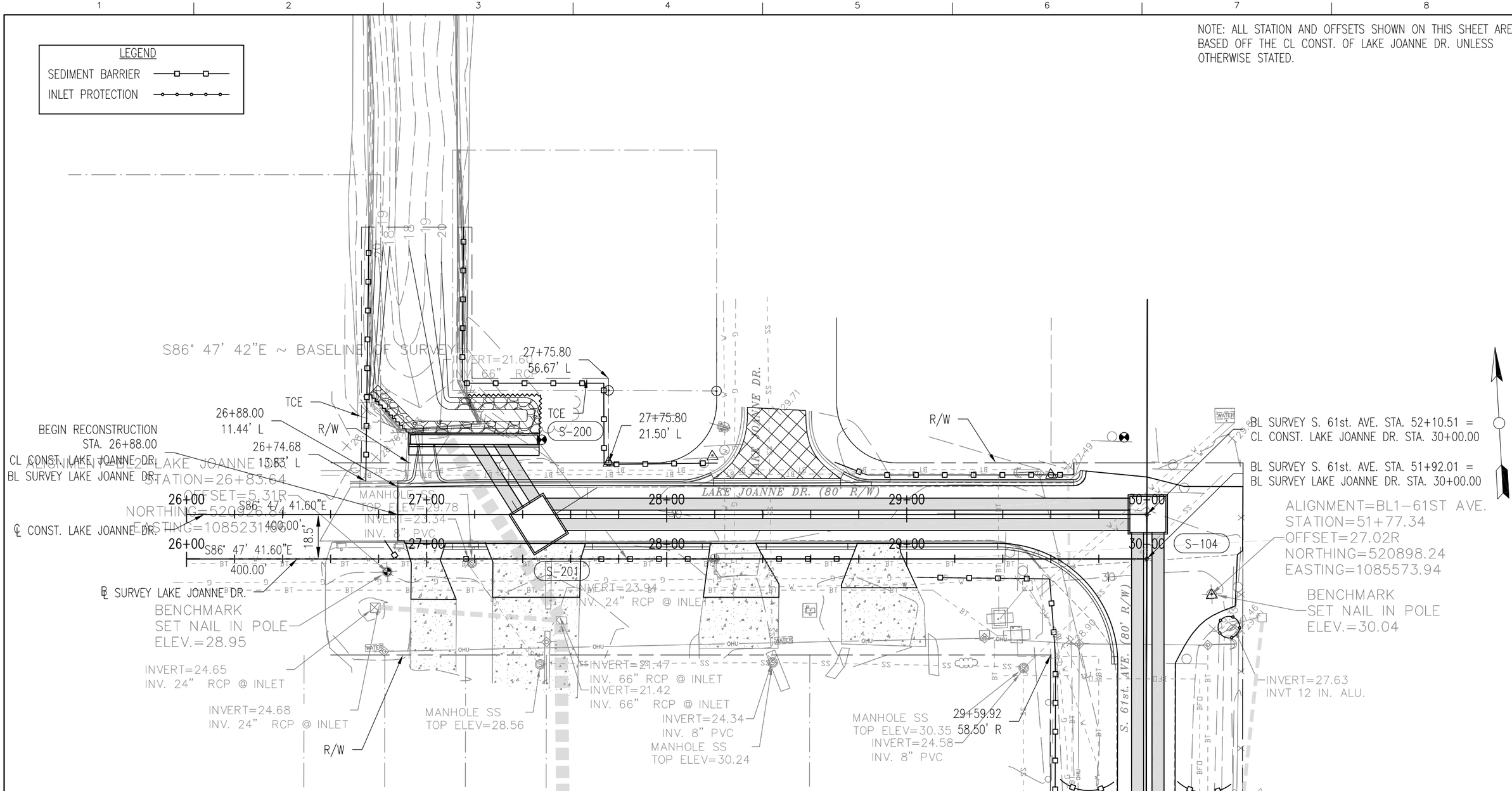

HDR Engineering, Inc.
25 West Cedar Street, Suite 200
Pensacola, FL 32502-5945
(850) 432-6800
www.hdrinc.com
Certificate of Authorization No. 4213

ISSUE	DATE	DESCRIPTION
–	–	–

PROJECT MANAGER	A. VINSON
DESIGNED BY	A. VINSON
DRAWN BY	J. CLARK
CHECKED BY	A. VINSON
PROJECT NUMBER	13-14.081

D. Allen Vinson, P.E.

License No. 72543

ESCAMBIA COUNTY FLORIDA

ESCAMBIA COUNTY
ENGINEERING DEPARTMENT

LAKE CHARLENE
DRAINAGE IMPROVEMENTS

EROSION CONTROL PLAN
LAKE JOANNE DR.
STA. 26+00.00 - 30+00.00

0 20 40

11 X 17 SCALE: 1" = 40'

SHEET 30

TEMPORARY TRAFFIC CONTROL NOTES:

1. THE CONTRACTOR SHALL PROVIDE AN APPROVED TRAFFIC CONTROL PLAN THAT ADHERES TO THE REQUIREMENTS OF THE FY 2018-19 FDOT DESIGN STANDARD PLANS.

2. THE TRAFFIC SHALL BE MAINTAINED IN ACCORDANCE WITH THE CURRENT FDOT "STANDARD PLAN" INDEX SERIES 102-600, SPECIFICALLY INDEX 102-600, 102-601, 102-602, 102-603, 102-604, 102-605, 102-612, 102-613 AND 102-615 AND THE CURRENT MANUAL ON UNIFORM TRAFFIC CONTROL DEVICES.

3. THE CONTRACTOR SHALL INSTALL ADVANCE CONSTRUCTION SIGNING PRIOR TO COMMENCEMENT OF ALL CONSTRUCTION OPERATIONS AND MAINTAIN SIGNING THROUGHOUT THE DURATION OF CONSTRUCTION.

4. ARROWS DENOTE DIRECTION OF TRAFFIC ONLY AND DO NOT REFLECT PAVEMENT MARKINGS, UNLESS OTHERWISE NOTED.

5. LANE CLOSURES WILL NOT BE PERMITTED DURING SPECIAL EVENTS, AND NO WORK WILL BE PERMITTED DURING HOLIDAYS AS CALLED FOR IN THE SPECIFICATIONS.
SPECIAL EVENT: BLUE ANGEL AIR SHOW AT NAVAL AIR STATION HELD DURING NOVEMBER OF EACH YEAR.

6. ALL LANES ON 61st AVE. & LAKE JOANNE DR. MUST BE REOPENED TO NORMAL TRAFFIC WITHIN 12 HOURS DURING AN EVACUATION NOTICE OF A HURRICANE OR ANY OTHER CATASTROPHIC EVENT AND SHALL REMAIN OPEN FOR THE DURATION OF THE EVACUATION OR EVENT AS DIRECTED BY THE PROJECT ENGINEER/ADMINISTRATOR.

7. EXISTING STREET AND ROAD NAME SIGNS ON THE PROJECT ARE TO BE TEMPORARILY RELOCATED DURING CONSTRUCTION AND KEPT VISIBLE AT ALL TIMES FOR THE FACILITATION OF ACCESS BY EMERGENCY VEHICLE TRAFFIC.

8. WORK ZONE SPEED LIMITS SHALL BE POSTED 20 MPH ON COUNTY ROADWAYS.

9. THE CONTRACTOR SHALL NOT EXCAVATE ANY AREA LARGER THAN HE CAN BACKFILL OR RECONSTRUCT BY THE END OF THE SAME WORK PERIOD. NO DROPOFF REQUIRING THE USE OF A BARRIER WALL WILL BE ALLOWED TO REMAIN IN AN INACTIVE WORK ZONE. THE CONTRACTOR SHALL RESTORE DROPOFFS TO AN ACCEPTABLE GRADE USING AN APPROVED METHOD FROM INDEX 600.

10. PORTABLE CHANGEABLE MESSAGE SIGNS (PCMS) ARE TO BE PLACED AND RUNNING AT LEAST 7 DAYS PRIOR TO LANE AND/OR INTERSECTION CLOSURE.

11. THE CONTRACTOR SHALL MAINTAIN ACCESS TO LOCAL PROPERTIES DURING ROAD CLOSURE.

12. THE CONTRACTOR IS RESPONSIBLE FOR COORDINATION WITH THE NAVY HOSPITAL ABOUT THE CLOSURE OF THEIR BACK GATE DURING CONSTRUCTION.

CONSTRUCTION SEQUENCE:

1. CLOSE S. 61ST AVE.
2. RELOCATE TRAFFIC SIGNAL ON US 98.
3. INSTALL PIPE ACROSS US 98 USING JACK AND BORE METHOD. (SEE FDOT SPECS)
4. INSTALL PIPE ON 61ST AVE.
5. RECONSTRUCT 61ST AVE.
6. INSTALL PIPE ON LAKE JOANNE DR.
7. RECONSTRUCT LAKE JOANNE DR.
8. OPEN S. 61ST AVE. TO TRAFFIC.
9. CONSTRUCT WEIR AND HEADWALL AT LAKE JOANNE CANAL.

HDR Engineering, Inc.
25 West Cedar Street, Suite 200
Pensacola, FL 32502-5945
(850) 432-6800
www.hdrinc.com
Certificate of Authorization No. 4213

ISSUE	DATE	DESCRIPTION
–	–	–

PROJECT MANAGER	A. VINSON
DESIGNED BY	J. CLARK
DRAWN BY	J. CLARK
CHECKED BY	J. BURCHFIELD
PROJECT NUMBER	PD 13-14.081

D. Allen Vinson, P.E.
License No. 72543

ESCAMBIA COUNTY ENGINEERING DEPARTMENT

LAKE CHARLENE AREA DRAINAGE IMPROVEMENTS

TEMPORARY TRAFFIC CONTROL PLAN

11 X 17 SCALE: NOT TO SCALE

SHEET 31

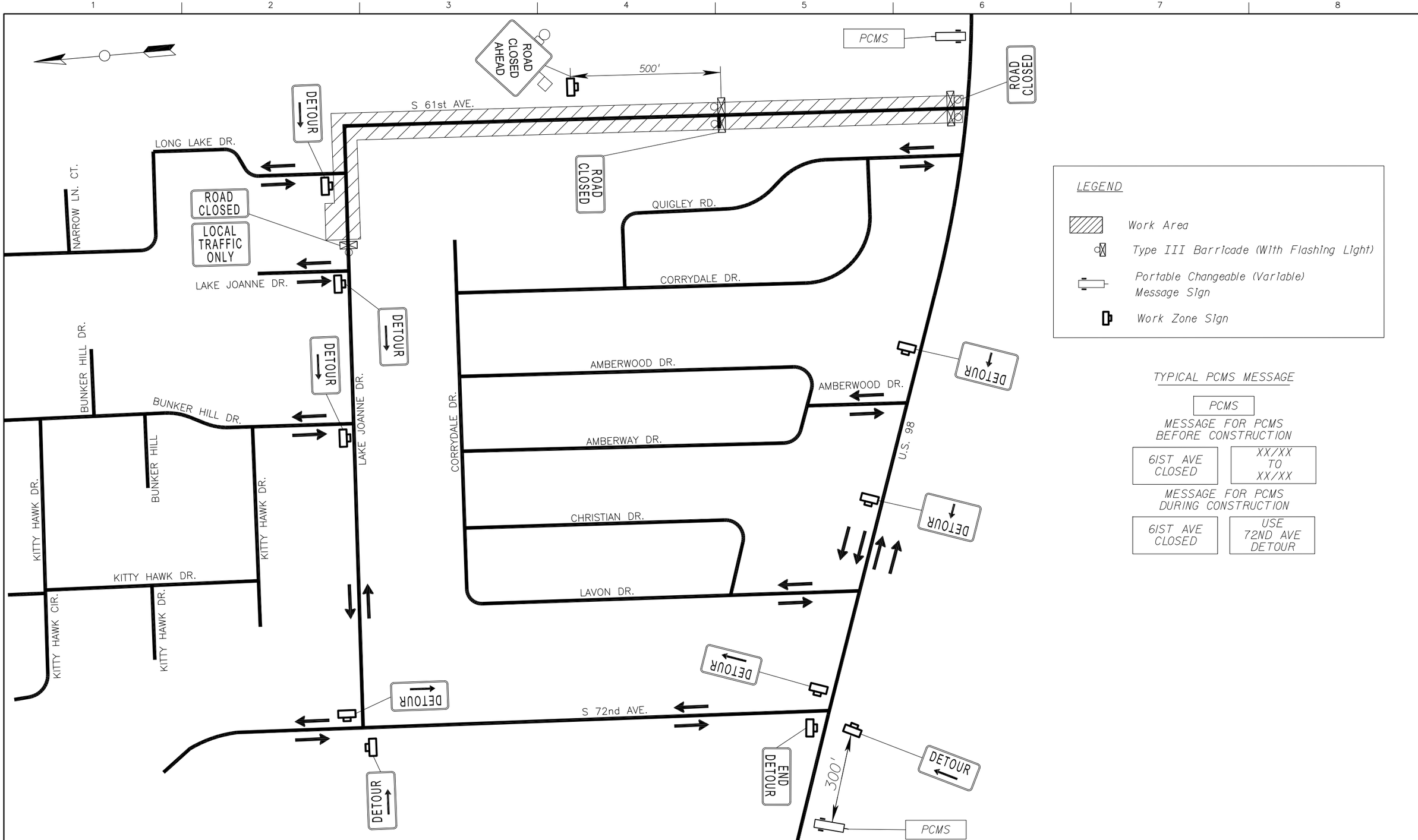

HDR Engineering, Inc.
25 West Cedar Street, Suite 200
Pensacola, FL 32502-5945
(850) 432-6800
www.hdrinc.com
Certificate of Authorization No. 4213

ISSUE	DATE	DESCRIPTION
–	–	–

PROJECT MANAGER	A. VINSON
DESIGNED BY	J. CLARK
DRAWN BY	J. CLARK
CHECKED BY	J. BURCHFIELD
PROJECT NUMBER	PD 13–14.081

D. Allen Vinson, P.E.

License No. 72543

ESCAMBIA COUNTY ENGINEERING DEPARTMENT

LAKE CHARLENE AREA DRAINAGE IMPROVEMENTS

TEMPORARY TRAFFIC CONTROL PLAN

0 150 300

11 X 17 SCALE: 1" = 300'

SHEET 32

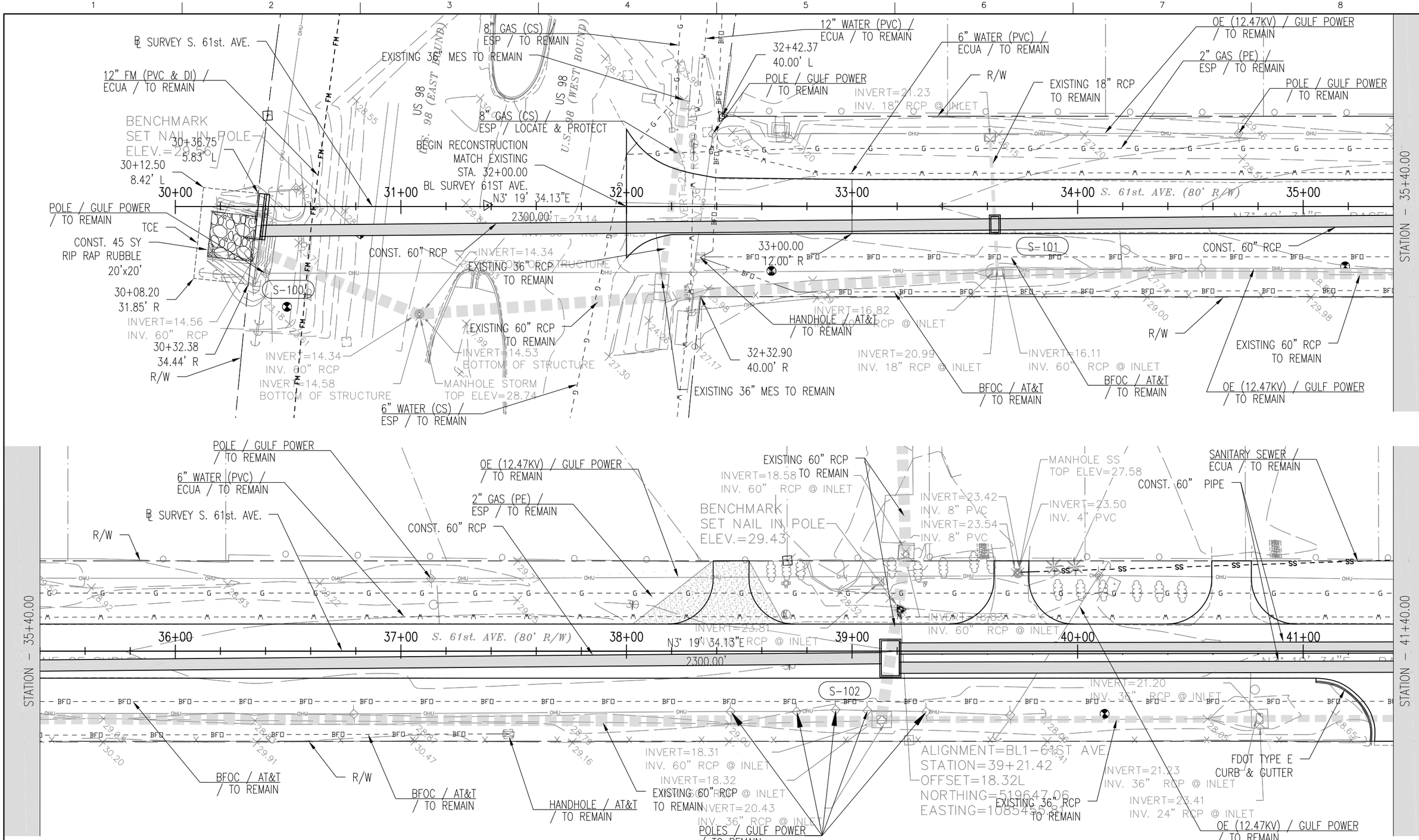

HDR Engineering, Inc.
25 West Cedar Street, Suite 200
Pensacola, FL 32502-5945
(850) 432-6800
www.hdrinc.com
Certificate of Authorization No. 4213

ISSUE	DATE	DESCRIPTION
–	–	–

PROJECT MANAGER	A. VINSON
DESIGNED BY	A. VINSON
DRAWN BY	J. CLARK
CHECKED BY	A. VINSON
PROJECT NUMBER	13-14.081

D. Allen Vinson, P.E.
License No. 72543

ESCAMBIA COUNTY FLORIDA

ESCAMBIA COUNTY ENGINEERING DEPARTMENT

LAKE CHARLENE DRAINAGE IMPROVEMENTS

UTILITY ADJUSTMENT PLAN
S. 61 St. AVE.
STA. 30+00.00 - 41+40.00

0 20 40

11 X 17 SCALE: 1" = 40'

SHEET **33**

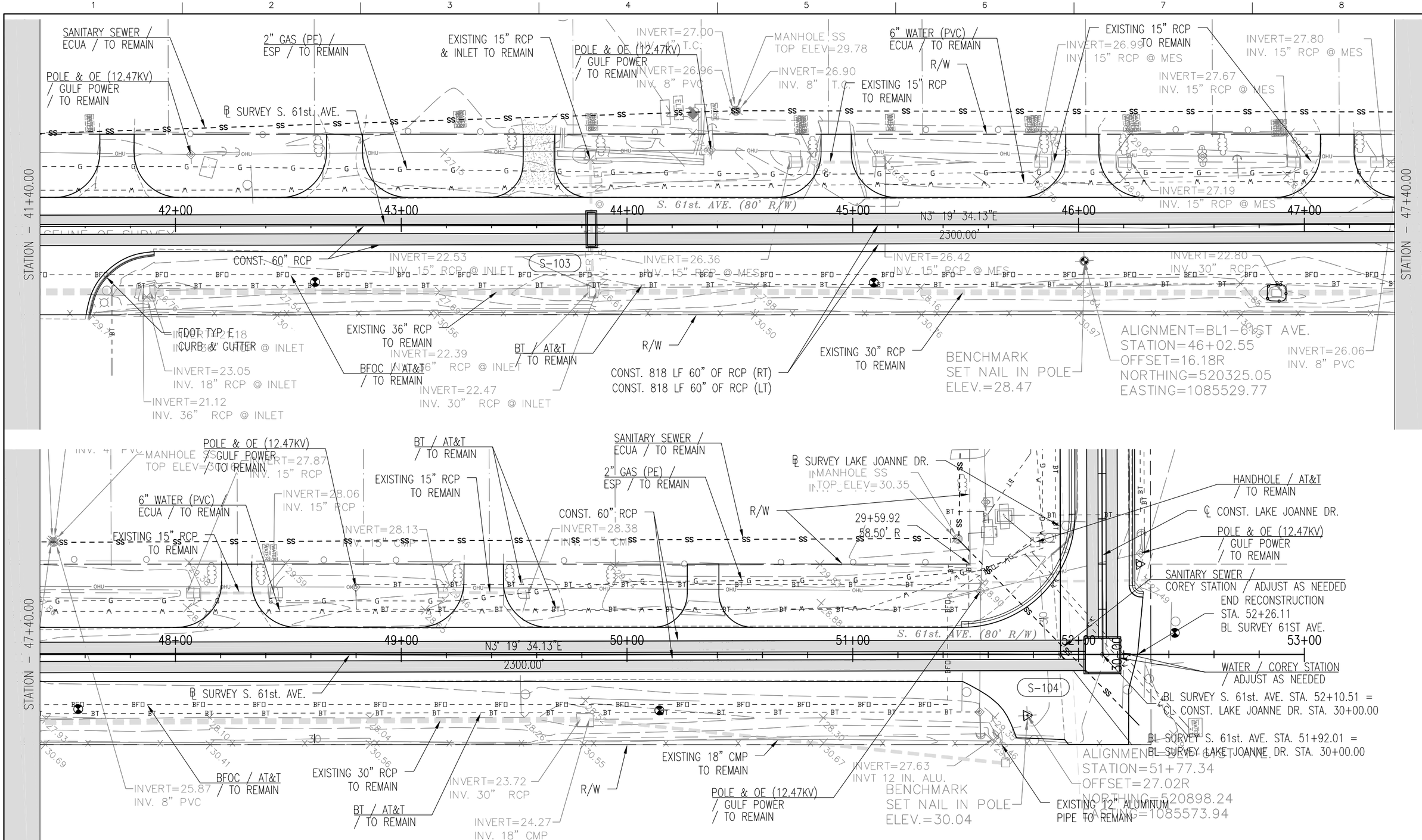

HDR Engineering, Inc.
25 West Cedar Street, Suite 200
Pensacola, FL 32502-5945
(850) 432-6800
www.hdrinc.com
Certificate of Authorization No. 4213

ISSUE	DATE	DESCRIPTION
–	–	–

PROJECT MANAGER	A. VINSON
DESIGNED BY	A. VINSON
DRAWN BY	J. CLARK
CHECKED BY	A. VINSON
PROJECT NUMBER	13-14.081

D. Allen Vinson, P.E.

License No. 72543

ESCAMBIA COUNTY ENGINEERING DEPARTMENT

LAKE CHARLENE DRAINAGE IMPROVEMENTS

UTILITY ADJUSTMENT PLAN
S. 61 St. AVE.
STA. 41+40.00 - 53+00.00

0 20 40

11 X 17 SCALE: 1" = 40'

SHEET 34

NOTE: ALL STATION AND OFFSETS SHOWN ON THIS SHEET ARE BASED OFF THE ℄ CONST. OF LAKE JOANNE DR. UNLESS OTHERWISE STATED.

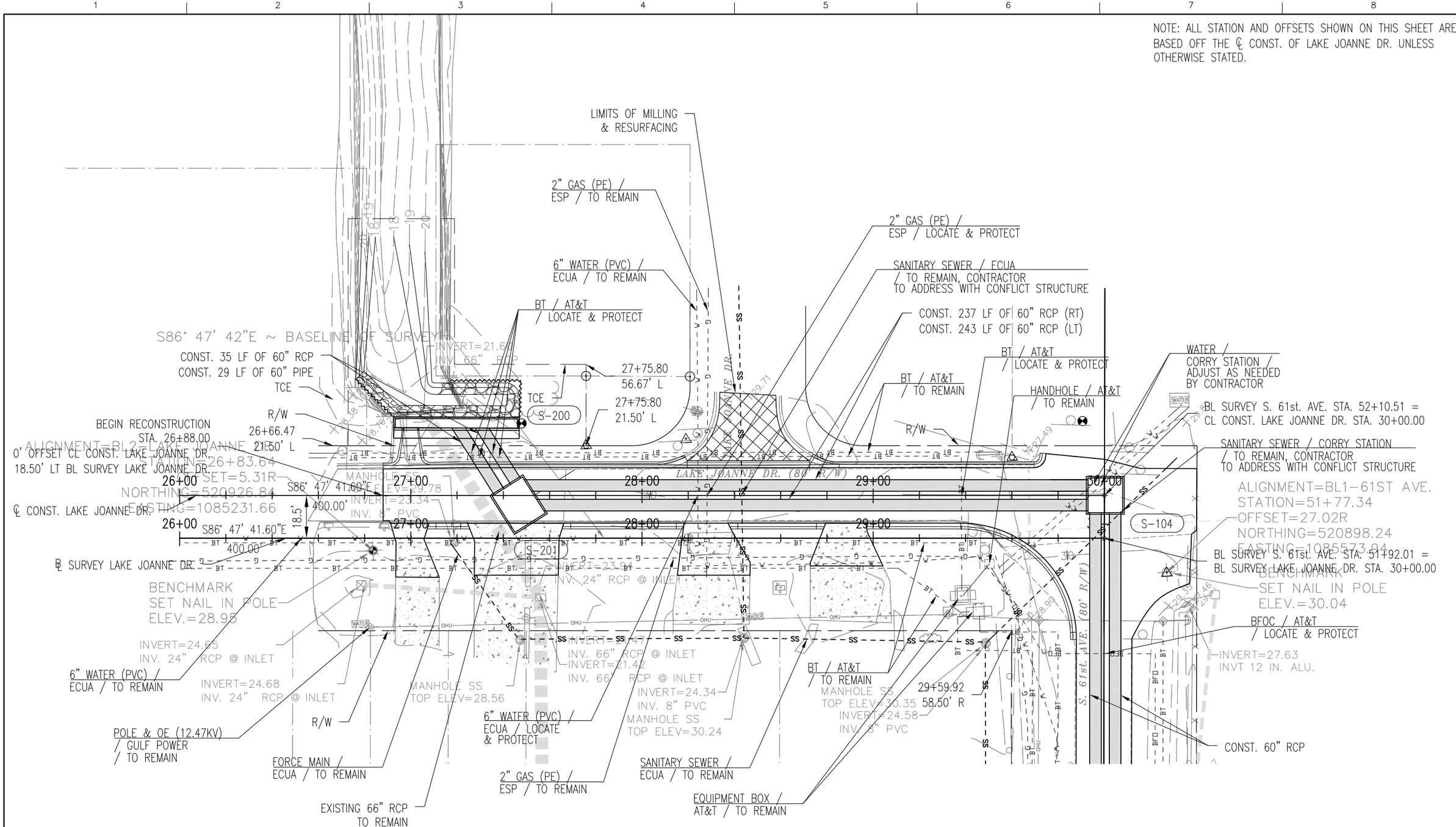

HDR Engineering, Inc.
25 West Cedar Street, Suite 200
Pensacola, FL 32502-5945
(850) 432-6800
www.hdrinc.com
Certificate of Authorization No. 4213

ISSUE	DATE	DESCRIPTION
–	–	–

PROJECT MANAGER	A. VINSON
DESIGNED BY	A. VINSON
DRAWN BY	J. CLARK
CHECKED BY	A. VINSON
PROJECT NUMBER	13-14.081

D. Allen Vinson, P.E.

License No. 72543

ESCAMBIA COUNTY ENGINEERING DEPARTMENT

LAKE CHARLENE DRAINAGE IMPROVEMENTS

UTILITY ADJUSTMENT PLAN
LAKE JOANNE DR.
STA. 26+00.00 - 30+00.00

0 20 40

11 X 17 SCALE: 1" = 40'

SHEET 35

NOTE: CONTRACTOR SHALL UTILIZE EXISTING SIGNAL CONTROLLER TIMINGS AND THE EXISTING SIGNAL OPERATING PLAN (SOP 12).

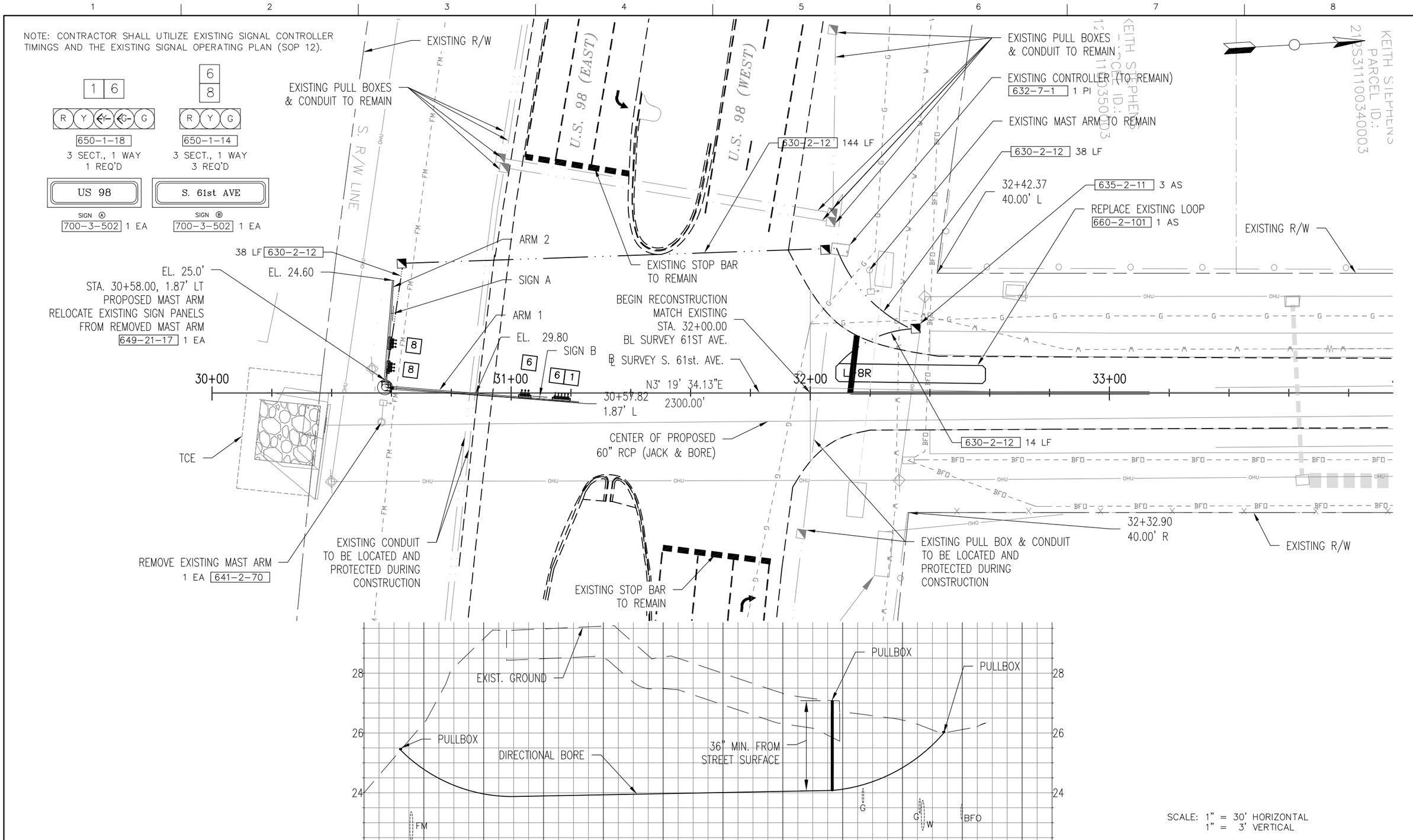

SCALE: 1" = 30' HORIZONTAL
1" = 3' VERTICAL

HDR Engineering, Inc.
25 West Cedar Street, Suite 200
Pensacola, FL 32502-5945
(850) 432-6800
www.hdrinc.com
Certificate of Authorization No. 4213

ISSUE	DATE	DESCRIPTION
–	–	–

PROJECT MANAGER	A. VINSON
DESIGNED BY	A. VINSON
DRAWN BY	J. CLARK
CHECKED BY	A. VINSON
PROJECT NUMBER	13-14.081

D. Allen Vinson, P.E.
License No. 72543

ESCAMBIA COUNTY
ENGINEERING DEPARTMENT

LAKE CHARLENE
DRAINAGE IMPROVEMENTS

SIGNALIZATION PLAN
U.S. 90 AND S. 61 st. AVE.

0 15 30

11 X 17 SCALE: 1" = 30'

SHEET
T-001

SPECIAL INSTRUCTIONS					
ID NO.	PED. BUTTON		PED. SIGNALS		HANDHOLE LOCATION

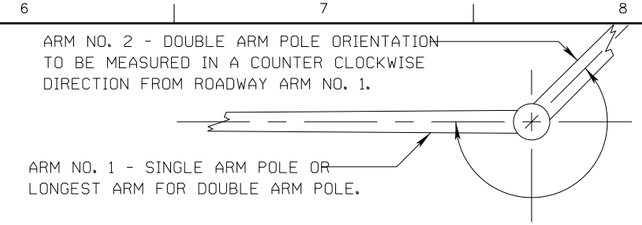

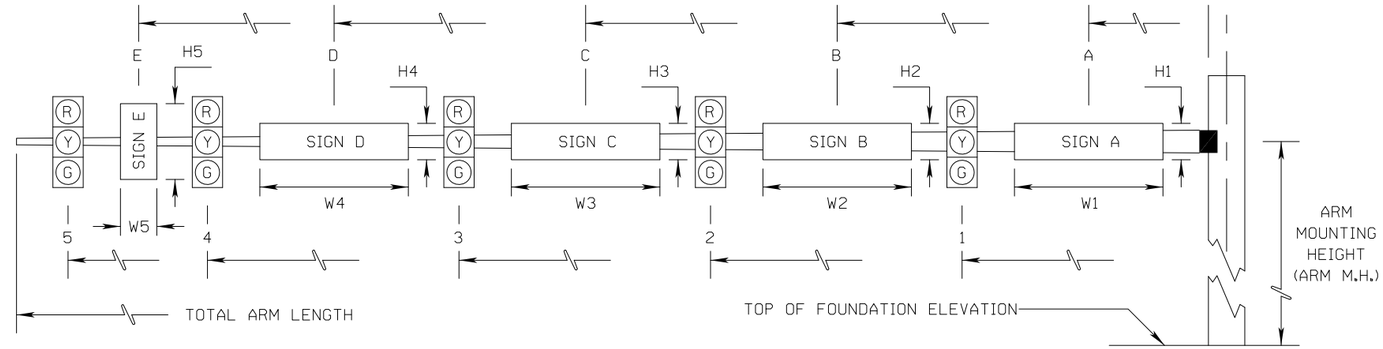

* DENOTES NUMBER OF SECTIONS IN SIGNAL HEAD ASSEMBLY

						SIGNAL DATA																			SIGN DATA																		
									DISTANCE FROM POLE																DISTANCE FROM POLE / HEIGHT AND WIDTH OF SIGN																		
ID NO.	SHEET NO.	LOCATION BY STA.	TOP OF FOUNDATION ELEVATION	RDWY ARM NO.	CROWN ELEV.	SIGNAL V/H	BACK PLATES Y/N	PED. SIGNAL Y/N	1	*	2	*	3	*	4	*	5	*	6	*	7	*	TOTAL ARM LENGTH	ARM M.H.	∠ BETWEEN DUAL ARMS 90/270	A	H1	W1	B	H2	W2	C	H3	W3	D	H4	W4	E	H5	W5	PAINT COLOR
1	17	30+58.00	25.00	1	29.80	H	Y	N	45	3	57	5											63.0	24.0	90	50.00	1.5	5														
				2	24.60	H	Y	N	8	3	16	3											34.0	24.0		25.00	1.5	5.5														

* FUTURE CONFIGURATION - NOT TO BE CONSTRUCTED AT THIS TIME

HDR Engineering, Inc.
25 West Cedar Street, Suite 200
Pensacola, FL 32502-5945
(850) 432-6800
www.hdrinc.com
Certificate of Authorization No. 4213

ISSUE	DATE	DESCRIPTION
–	–	–

PROJECT MANAGER	A. VINSON
DESIGNED BY	A. VINSON
DRAWN BY	J. CLARK
CHECKED BY	A. VINSON
PROJECT NUMBER	13–14.081

D. Allen Vinson, P.E.

License No. 72543

ESCAMBIA COUNTY ENGINEERING DEPARTMENT

LAKE CHARLENE DRAINAGE IMPROVEMENTS

MAST ARM TABULATION
U.S. 90 AND S. 61 st. AVE.

11 X 17 SCALE: NOT TO SCALE

SHEET T-002

SPECIAL MAST ARM ASSEMBLIES DATA TABLE																								
NUMBER OF LOCATIONS	STRUCTURE NUMBER	FIRST ARM				FIRST ARM EXTENSION				SECOND ARM				SECOND ARM EXTENSION				POLE						
		FA(ft)	FB(in)	FC(in)	FD(in)	FE(ft)	FF(in)	FG(in)	FH(in)	SA(ft)	SB(in)	SC(in)	SD(in)	SE(ft)	SF(in)	SG(in)	SH(iin)	UA(ft)	UB(ft)	UC(in)	UD(in)	UE(in)	UF(deg)	UG(ft)
1	1	30	8.71	12.9	0.25	35	12.1	17	0.375	34	8.28	13	0.25	0	0	0	0	27	24	20.2	24	0.375	270	0

SPECIAL MAST ARM ASSEMBLIES DATA TABLE (CONT.)																							
STRUCTURE NUMBER	FIRST ARM CONNECTION (in) FIRST ARM CAMBER ANGLE = 2 DEGREES											SECOND ARM CONNECTION (in) SECOND ARM CAMBER ANGLE = 2 DEGREES											
	# BOLTS	HT	FJ	FK	FL	FN	FO	FP	FR	FS	FT	# BOLTS	HT	SJ	SK	SL	SN	SO	SP	SR	SS	ST
1	6	30	36	3	0.75	0.25	25.8	1.25	2	12.5	0.313	6	30	36	3	0.75	0.25	25.8	1.25	2	12.5	0.313

SPECIAL MAST ARM ASSEMBLIES DATA TABLE (CONT.)																								
STRUCTURE NUMBER	POLE BASE CONNECTION (in)					SHAFT AND REINFORCING								LUMINAIRE AND LUMINAIRE CONNECTION										
	# BOLTS	BA	BB	BC	BF	DA(ft)	DB(ft)	RA	RB	RC	RD(in)	RE	RF(in)	LA(ft)	LB(ft)	LC(in)	LD(in)	LE	LF(ft)	LG(in)	LH(in)	LJ(in)	LK(in)	LL(deg)
1	6	40	2.5	2	40	24	5	11	19	12	8	0	0	0	0	0	0	0	0	0	0			

NOTES:
1. WORK WITH INDEX 17745.
2. DESIGN WIND SPEED = 150 MPH
3. MOUNTING ARM HEIGHT, REFER TO MAST ARM TABULATIONS SHEET FOR ACTUAL ARM MOUNTING HEIGHT FOR EACH ARM.

FOUNDATION NOTES:

1. DESIGN BASED ON BORING B-11 SHOWN IN ADDENDUM DATED 01/26/2017, SIGNED AND SEALED BY TERRY NEIMAN, LMJ & ASSOCIATES, INC.
2. ASSUMPTIONS AND VALUES USED IN DESIGN:

   SOIL TYPE = COHESIONLESS
   SOIL LAYER THICKNESS = 25 FT.
   SOIL FRICTION ANGLE = 23 DEG.
   SOIL WEIGHT = 49 PCF
   N = 9
   DESIGN WATER TABLE IS 5 FT. BELOW SURFACE
3. SOIL CONDITIONS WILL REQUIRE THE USE OF THE WET CONSTRUCTION METHOD DURING SHAFT INSTALLATION PER FDOT SPEC 455 . USE OF A PERMANENT CASING WILL REQUIRE DRILLED SHAFT RE-DESIGN TO DETERMINE SHAFT DEPTH INCREASE.

MOTT MACDONALD
MOTT MACDONALD FLORIDA LLC
220 West Garden Street
Suite 700,
Pensacola, Florida 32502
Telephone: (850) 484-6011
Architects AA - C000035
Engineers EB - 0000165
Surveyors LB - 0000763

HDR
Employee-owned
HDR Engineering, Inc.
25 West Cedar Street, Suite 200
Pensacola, FL 32502-5945
(850) 432-6800
www.hdrinc.com
Certificate of Authorization No. 4213

ISSUE	DATE	DESCRIPTION
A	02/02/18	ISSUED FOR PERMIT

PROJECT MANAGER	B. HENDRICKS
DESIGNED BY	YSS
DRAWN BY	KWD
CHECKED BY	BFH
PROJECT NUMBER	13-14.081

Bart F. Hendricks
License No. 51391

ESCAMBIA COUNTY FLORIDA

ESCAMBIA COUNTY ENGINEERING DEPARTMENT

LAKE CHARLENE Area of Warrington Basin Study

MAST ARM TABLE OF VARIABLES

SCALE AS SHOWN

SHEET T003

350271 LakeCharlene T003 - MAST ARM TABLE OF VARIABLES 6/5/2018 3:18 PM

GENERAL NOTES

GOVERNING STANDARDS AND CONSTRUCTION SPECIFICATIONS:
1. FLORIDA DEPARTMENT OF TRANSPORTATION STANDARD SPECIFICATIONS FOR ROADS AND BRIDGE CONSTRUCTION, AS AMENDED BY CONTRACT DOCUMENTS (LATEST EDITION)
2. FDOT STRUCTURES MANUAL DATED JANUARY 2017
3. AMERICAN ASSOCIATION OF STATE HIGHWAY AND TRANSPORTATION OFFICIALS (AASHTO) LOAD AND RESISTANCE FACTOR (LRFD) BRIDGE DESIGN SPECIFICATIONS, [7TH], EDITION AND ALL SUBSEQUENT INTERIMS.

MATERIALS
1. ALL CONCRETE SHALL CONFORM WITH SECTION 346.
2. UNIT WEIGHT OF CONCRETE (INCLUDING REINFORCING) = 150 LB/FT^3
3. CONCRETE SHALL BE CLASS II, CAST IN PLACE AND HAVE A MIN. 28-DAY COMPRESSIVE STRENGTH OF 3,400 PSI.
4. PROVIDE ¾" CHAMFERS ON ALL EXPOSED EDGES EXCEPT AS OTHERWISE NOTED.
5. ALL REINFORCING STEEL SHALL BE ASTM A615, GRADE 60
6. MINIMUM CONCRETE COVER SHALL BE AS FOLLOWS UNLESS OTHERWISE SHOWN IN PLANS:
   WALL: 2"
   FOOTING: 2", EXCEPT CAST AGAINST EARTH: 3"

PLAN DIMENSIONS
1. ALL DIMENSIONS IN THESE PLANS ARE MEASURED IN FEET EITHER HORIZONTALLY OR VERTICALLY UNLESS OTHERWISE NOTED.
2. ENDWALL DIMENSIONS, LOCATIONS AND POSITIONS ARE FOR ROUND AND ELLIPTICAL CONCRETE PIPE. ROUND CONCRETE PIPE SHOWN.

UTILITIES
1. FOR LOCATIONS OF EXISTING UTILITIES, SEE CIVIL DRAWINGS AND UTILITY PLANS.
   THE UTILITIES SHOWN IN THESE PLANS ARE AT APPROXIMATE LOCATIONS.

SITE CONDITIONS
1. REVIEW ALL CONTRACT DOCUMENTS, DIMENSIONS AND SITE CONDITIONS AND COORDINATE WITH FIELD DIMENSIONS. REPORT ANY DISCREPANCIES IN WRITING TO THE ENGINEER OF RECORD. DO NOT CHANGE SIZE OR DIMENSIONS OF STRUCTURAL MEMBERS WITHOUT WRITTEN INSTRUCTIONS FROM THE ENGINEER OF RECORD.
2. ALL PORTIONS OF TREES AND MISCELLANEOUS DEBRIS WITHIN THE CHANNEL WITHIN THE R/W LIMITS SHALL BE REMOVED AND DISPOSED PROPERLY.
3. FRONT SLOPE AND DITCH TRANSITIONS SHALL BE IN ACCORDANCE WITH INDEX NO. 280.
4. ON OUTFALL DITCHES WITH SIDE SLOPES FLATTER THAN 1:1½ PROVIDE 20' TRANSITIONS FROM THE ENDWALL TO THE FLATTER SIDE SLOPES, RIGHT OF WAY PERMITTING.
5. DEWATERING WILL BE NEEDED TO INSTALL THE FOUNDATIONS. REFER TO GEOTECHNICAL REPORT FROM LARRY M. JACOBS, FILE # 16-251, DATED JANUARY 13, 2017 FOR HEADWALL FOUNDATION AND SHEET PILE RECOMMENDATIONS.
6. IF DEWATERING IS NOT PAID FOR IN A PAY ITEM, DEWATERING COST SHALL BE INCIDENTAL TO THE COST OF THE ITEM TO BE INSTALLED.

MOTT MACDONALD
MOTT MACDONALD FLORIDA LLC
229 West Garden Street
Suite 700,
Pensacola, Florida 32502
Telephone: (850) 484-6101
Architects AA - C000300
Engineers LB - 0000135
Surveyors LB - 0000793

HDR
Employee-owned
HDR Engineering, Inc.
25 West Cedar Street, Suite 200
Pensacola, FL 32502-5945
(850) 432-6800
www.hdrinc.com
Certificate of Authorization No. 4213

ISSUE	DATE	DESCRIPTION
A	10/20/17	ISSUED FOR PERMIT

PROJECT MANAGER	B. HENDRICKS
DESIGNED BY	YSS
DRAWN BY	KWD
CHECKED BY	BFH
PROJECT NUMBER	13-14.081

Bart F. Hendricks

License No. 51391

ESCAMBIA COUNTY FLORIDA

ESCAMBIA COUNTY
ENGINEERING DEPARTMENT

LAKE CHARLENE Area of
Warrington Basin Study

STRUCTURAL GENERAL NOTES

SCALE AS SHOWN

SHEET S001

350271 LakeCharlene S001 - STRUCTURAL GENERAL NOTES 10/19/2017 3:59 PM

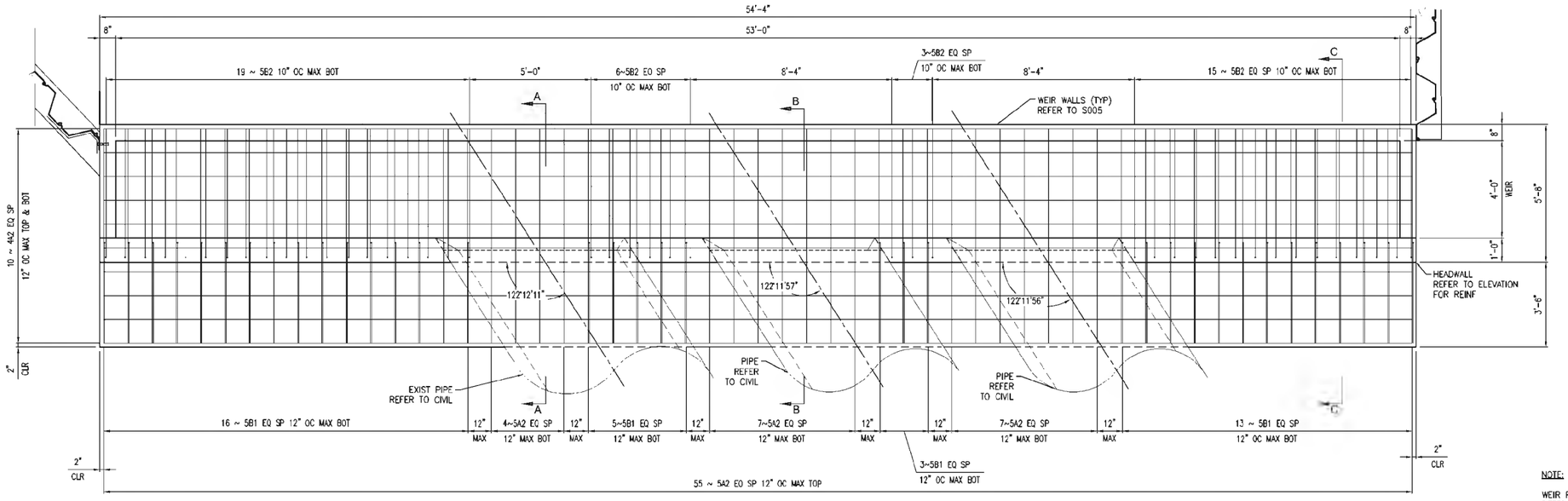

FOUNDATION PLAN

(WALL REINFORCING NOT SHOWN)
SCALE: 3/8" = 1'=0"

NOTE:

WEIR REINFORCING NOT SHOWN
REFER TO S005 FOR WEIR PLAN
AND DETAILS

ESTIMATED QUANTITIES		
ITEM	UNIT	QUANTITY
CLASS II CONCRETE	CU. YD.	44
REINFORCING STEEL	LB.	4066

NOTE:

* – INDICATES BARS FIELD CUT AS NEEDED

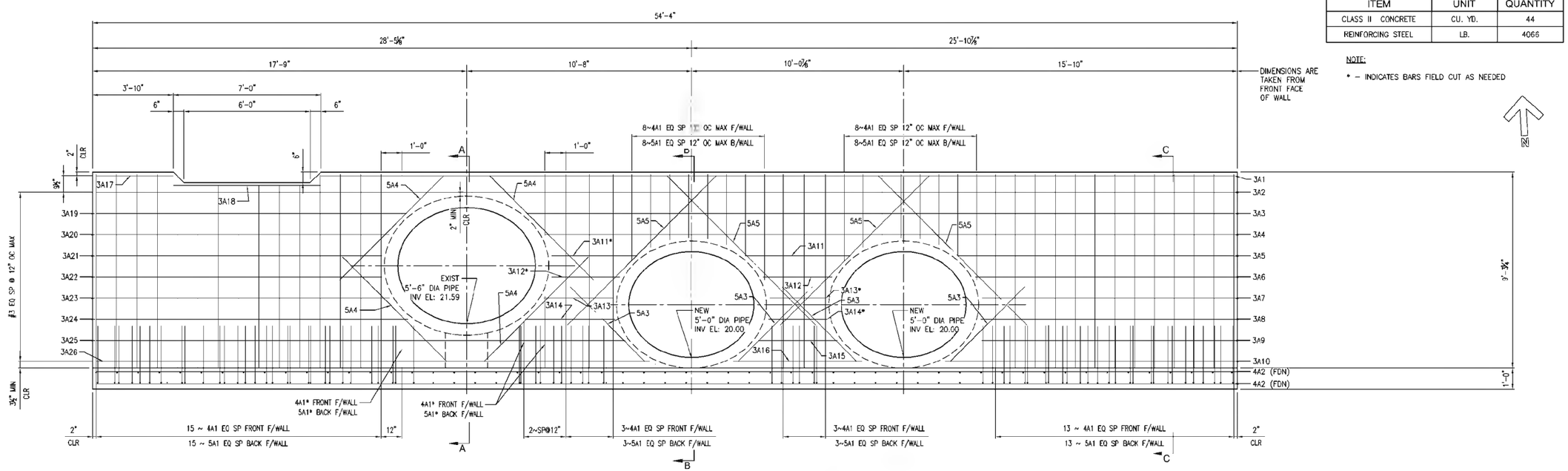

ELEVATION

(TURNDOWN NOT SHOWN)
SCALE: 3/8" = 1'=0"

MOTT MACDONALD FLORIDA LLC

HDR Employee-owned

HDR Engineering, Inc.
25 West Cedar Street, Suite 200
Pensacola, FL 32502-5945
(850) 432-6800
www.hdrinc.com
Certificate of Authorization No. 4213

ISSUE	DATE	DESCRIPTION
A	10/20/17	ISSUED FOR PERMIT

PROJECT MANAGER	B. HENDRICKS
DESIGNED BY	YSS
DRAWN BY	KWD
CHECKED BY	BFH
PROJECT NUMBER	13-14.081

Bart F. Hendricks

License No. 51391

ESCAMBIA COUNTY ENGINEERING DEPARTMENT

LAKE CHARLENE Area of Warrington Basin Study

HEADWALL PLAN AND ELEVATION
LAKE JOANNE DRIVE

SCALE AS SHOWN

SHEET S002

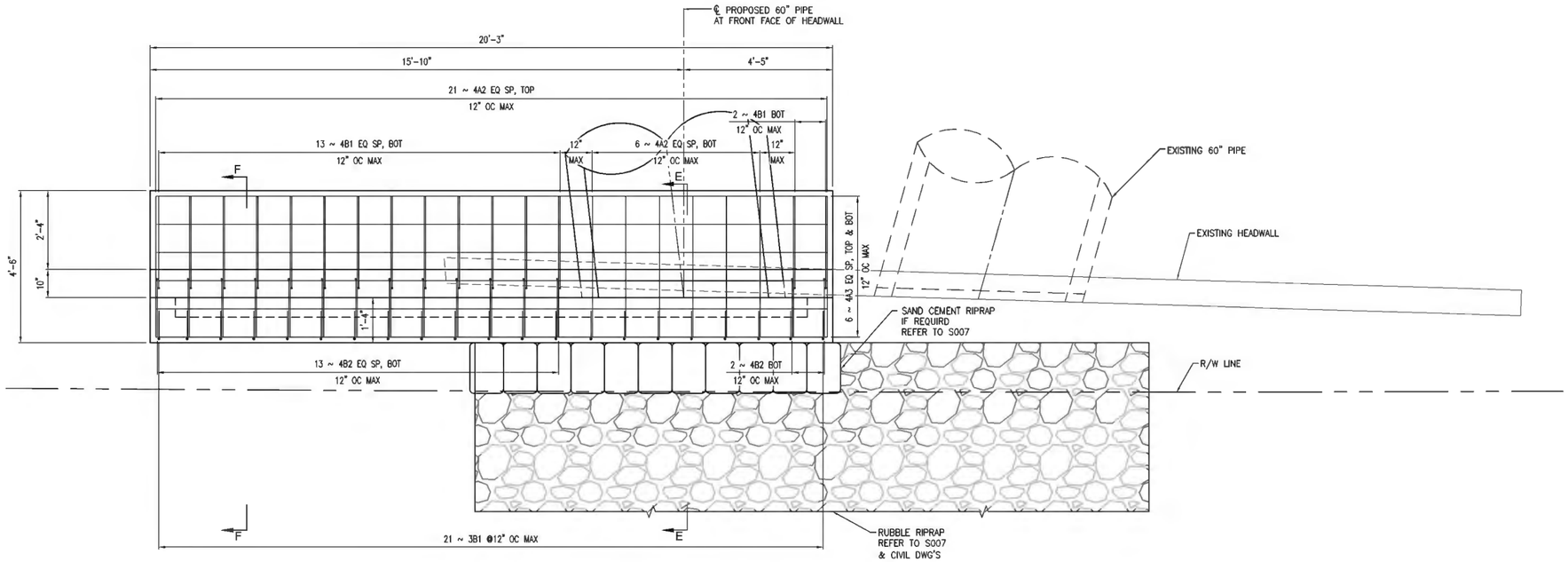

FOUNDATION PLAN

SCALE: ½" = 1'=0"

ESTIMATED QUANTITIES		
ITEM	UNIT	QUANTITY
CLASS II CONCRETE	CU. YD.	7
REINFORCING STEEL	LB.	642

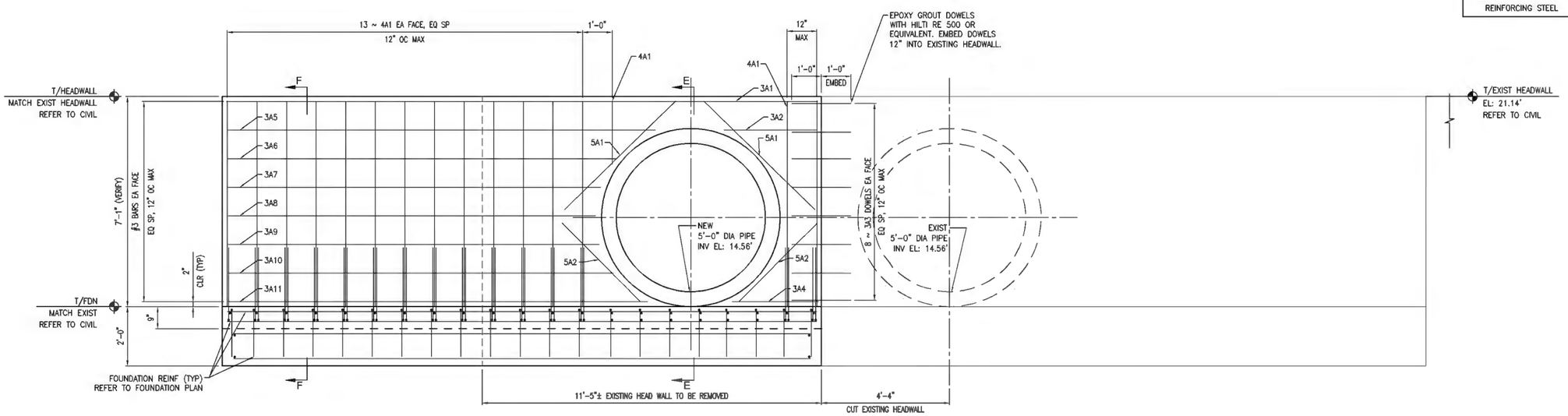

ELEVATION

SCALE: ½" = 1'=0"

MOTT MACDONALD

MOTT MACDONALD FLORIDA LLC
2309 West Cleveland Street
Suite 7300,
Pensacola, Florida 32505
Telephone: (850) 484-6101
Architects AA - C000300
Engineers LB - 0000035
Surveyors LB - 0000532

HDR
Employee-owned

HDR Engineering, Inc.
25 West Cedar Street, Suite 200
Pensacola, FL 32502-5945
(850) 432-6800
www.hdrinc.com
Certificate of Authorization No. 4213

ISSUE	DATE	DESCRIPTION
A	10/20/17	ISSUED FOR PERMIT

PROJECT MANAGER	B. HENDRICKS
DESIGNED BY	YSS
DRAWN BY	KWD
CHECKED BY	BFH
PROJECT NUMBER	13-14.081

Bart F. Hendricks

License No. 51391

ESCAMBIA COUNTY ENGINEERING DEPARTMENT

LAKE CHARLENE Area of Warrington Basin Study

HEADWALL PLAN AND ELEVATION
S 61ST STREET AND US HWY 98

SCALE AS SHOWN

SHEET S003

3502271 LakeCharlene S003 - HEADWALL PLAN AND ELEVATION 10/19/2017 4:02 PM

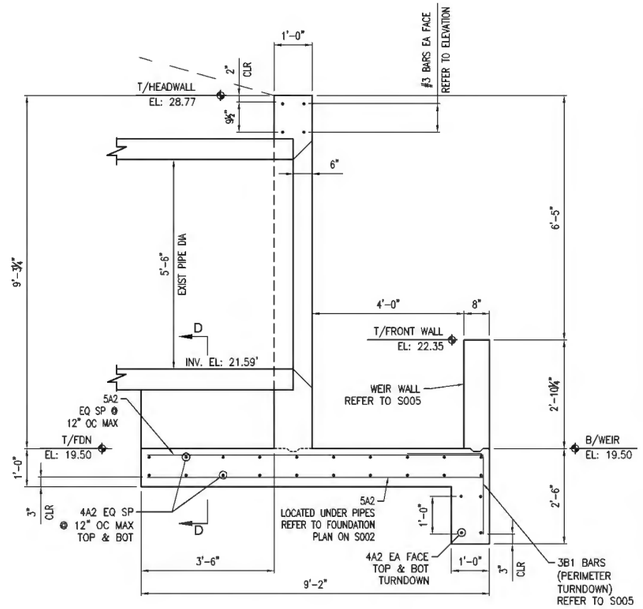

NOTE:
WEIR REINFORCING NOT SHOWN
REFER TO WEIR PLAN AND DETAILS
USE WITH SHEET S002

SECTION A-A
(5'-6" DIA PIPE)
SCALE: ½" = 1'-0"

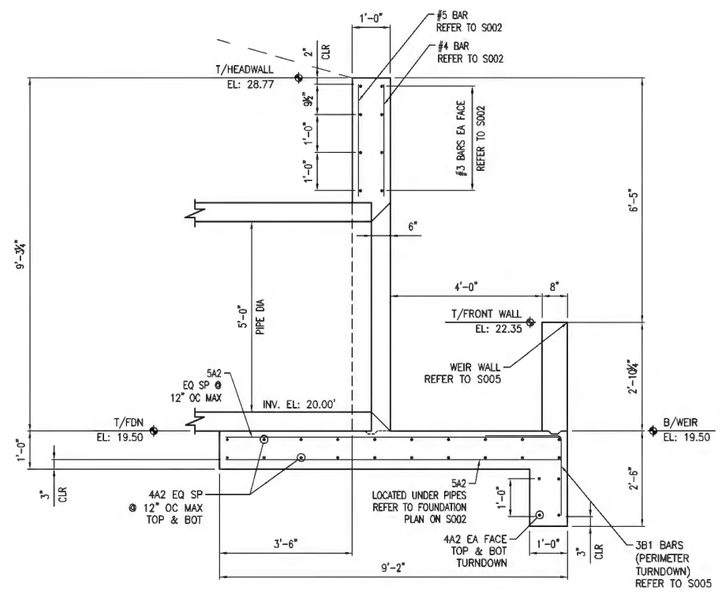

NOTE:
WEIR REINFORCING NOT SHOWN
REFER TO WEIR PLAN AND DETAILS
USE WITH SHEET S002

SECTION B-B
(5'-0" DIA PIPE)
SCALE: ½" = 1'-0"

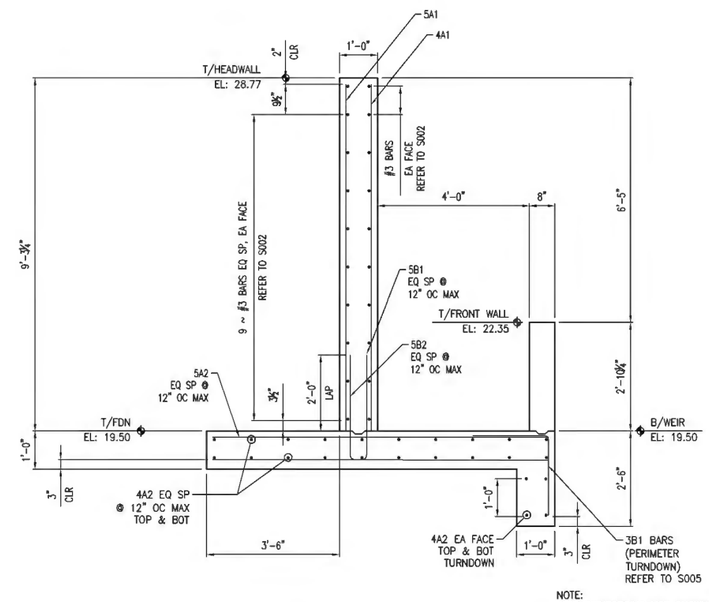

NOTE:
WEIR REINFORCING NOT SHOWN
REFER TO WEIR PLAN AND DETAILS
USE WITH SHEET S002

SECTION C-C
(TYPICAL ENDWALL SECTION)
SCALE: ½" = 1'-0"

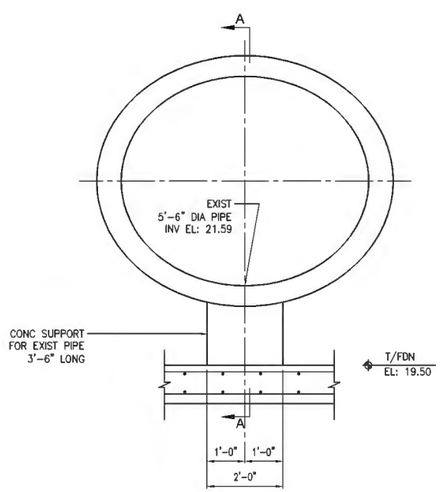

SECTION D-D
(CONCRETE SUPPORT FOR EXISTING PIPE)
SCALE: ½" = 1'-0"

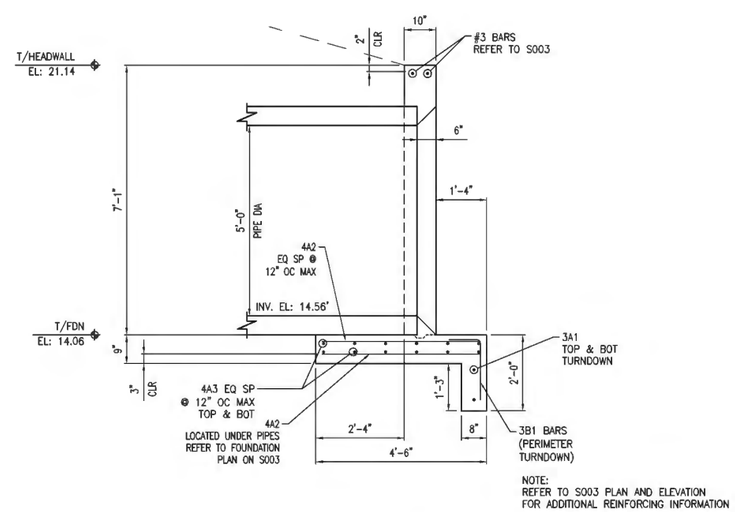

NOTE:
REFER TO S003 PLAN AND ELEVATION
FOR ADDITIONAL REINFORCING INFORMATION

SECTION E-E
(5'-0" DIA PIPE SOUTH HEAD WALL)
SCALE: ½" = 1'-0"

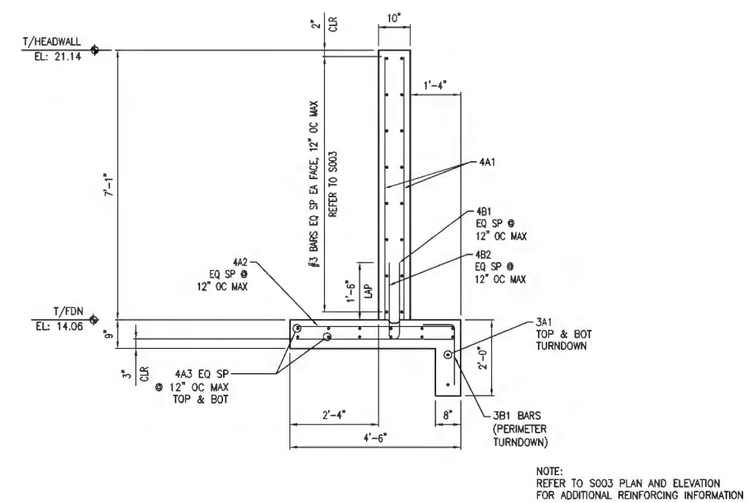

NOTE:
REFER TO S003 PLAN AND ELEVATION
FOR ADDITIONAL REINFORCING INFORMATION

SECTION F-F
(TYPICAL ENDWALL SECTION SOUTH HEADWALL)
SCALE: ½" = 1'-0"

MOTT MACDONALD FLORIDA LLC
220 West Garden Street
Suite 700,
Pensacola, Florida 32502
Telephone: (850) 484-6101
Architects AA - C000303 C
Engineers LB - 0000126
Surveyors LB - 0000793

HDR Employee-owned
HDR Engineering, Inc.
25 West Cedar Street, Suite 200
Pensacola, FL 32502-5945
(850) 432-6800
www.hdrinc.com
Certificate of Authorization No. 4213

ISSUE	DATE	DESCRIPTION
A	10/20/17	ISSUED FOR PERMIT

PROJECT MANAGER	B. HENDRICKS
DESIGNED BY	YSS
DRAWN BY	KWD
CHECKED BY	BFH
PROJECT NUMBER	13-14.081

Bart F. Hendricks
License No. 51391

ESCAMBIA COUNTY ENGINEERING DEPARTMENT

LAKE CHARLENE Area of Warrington Basin Study

HEADWALL DETAILS

SCALE: AS SHOWN

SHEET S004

350271 LakeCharlene S004 - HEADWALL DETAILS 10/19/2017 4:03 PM

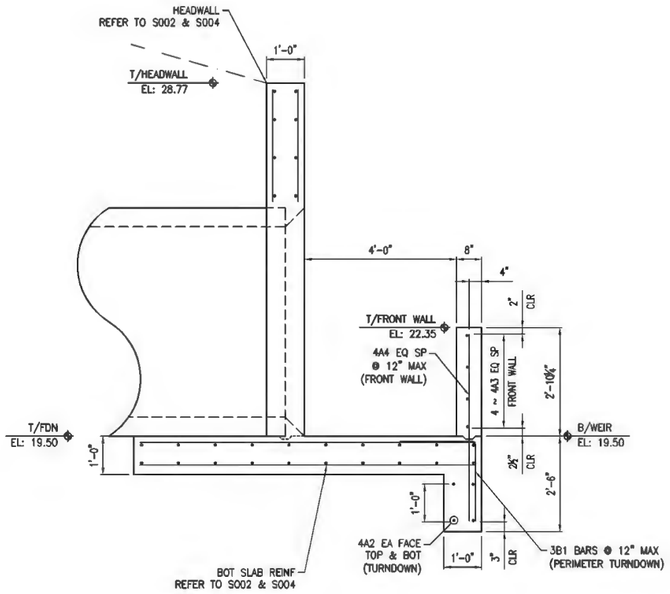

SECTION A-A

AT 5'-0" DIA PIPE (5'-6" DIA PIPE SIMILAR)
SCALE: ½" = 1'=0"

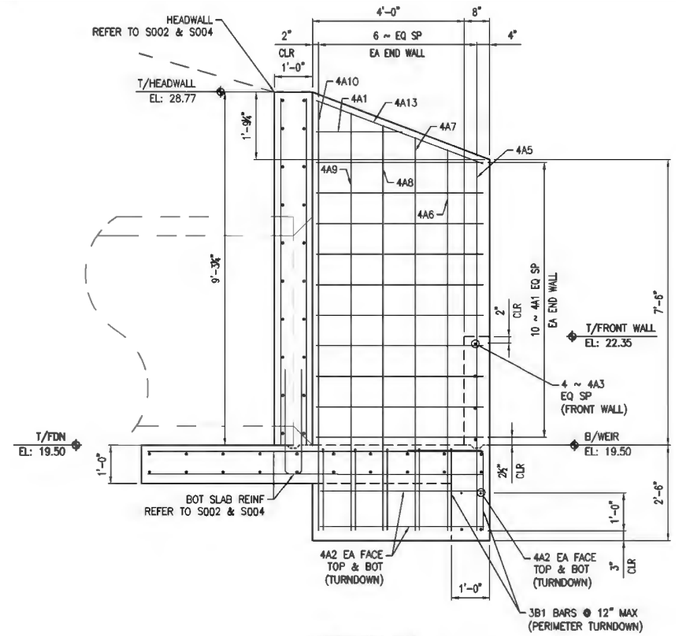

SECTION B-B

(WEIR SIDE WALL)
SCALE: ½" = 1'=0"

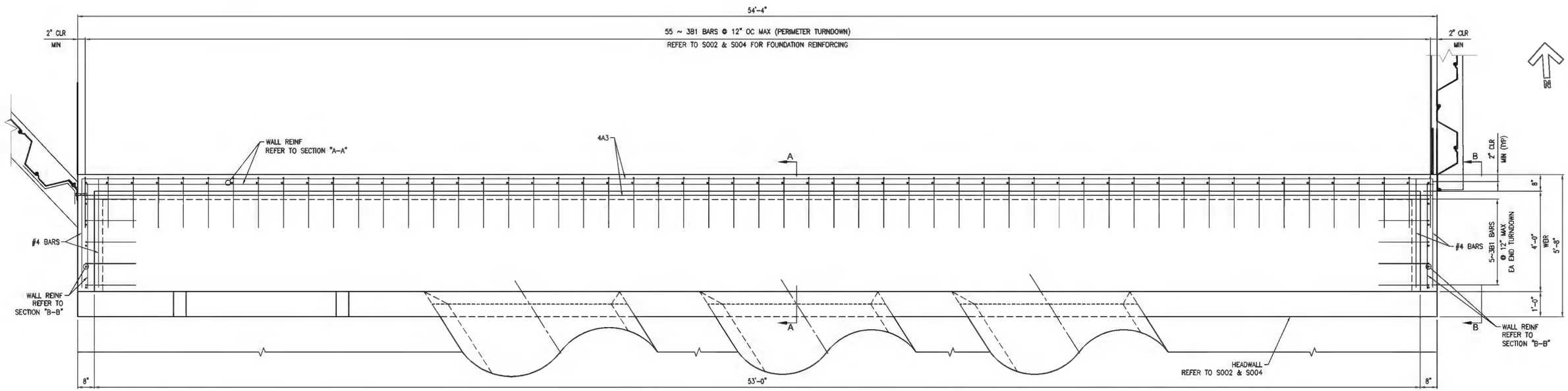

WEIR PLAN

(HEADWALL & FOOTING REINFORCING NOT SHOWN)
SCALE: ½" = 1'=0"

MOTT MACDONALD
MOTT MACDONALD FLORIDA LLC
3520 West Cypress Street
Suite 700,
Pensacola, Florida 32505
Telephone: (850) 484-6111
Architects AA - C000001 &
Engineers EB - C000108B
Surveyors LB - C000793B

HDR
Employee-owned
HDR Engineering, Inc.
25 West Cedar Street, Suite 200
Pensacola, FL 32502-5945
(850) 432-6800
www.hdrinc.com
Certificate of Authorization No. 4213

ISSUE	DATE	DESCRIPTION
A	10/20/17	ISSUED FOR PERMIT

PROJECT MANAGER	B. HENDRICKS
DESIGNED BY	YSS
DRAWN BY	KWD
CHECKED BY	BFH
PROJECT NUMBER	13-14.081

Bart F. Hendricks
License No. 51391

ESCAMBIA COUNTY ENGINEERING DEPARTMENT
LAKE CHARLENE Area of Warrington Basin Study

WEIR PLAN AND DETAILS
LAKE JOANNE DRIVE

SCALE: AS SHOWN
SHEET S005

350271 LakeCharlene S005 - WEIR PLAN AND DETAILS 10/19/2017 4:04 PM

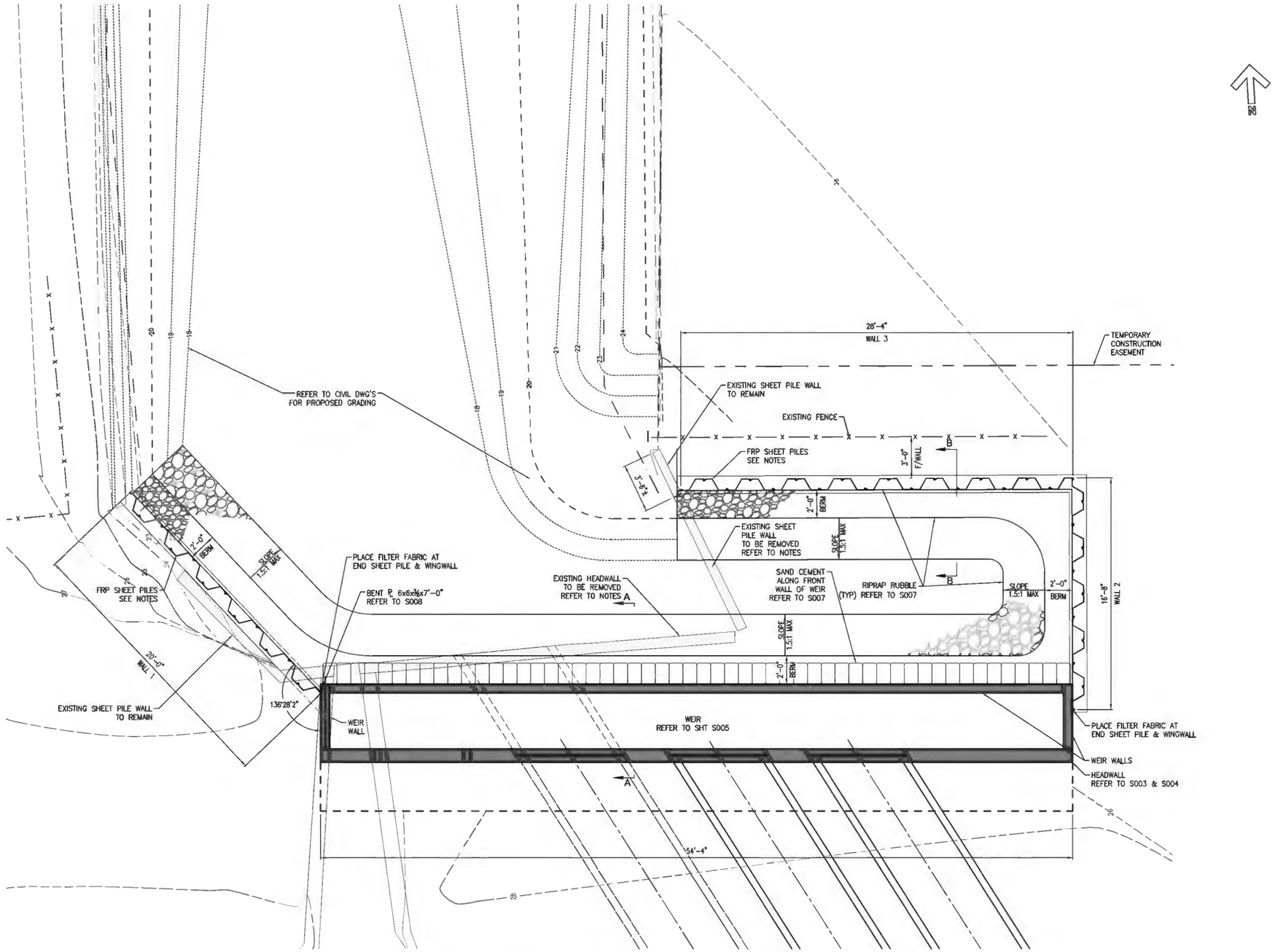

SHEET PILE WALL AND RIPRAP PLAN

SCALE : 1/4" = 1'

NOTES:

1. WARNING: WORK FOR THIS SITE IS BEING PERFORMED NEAR A GAS LINE.
2. WORK THIS SHEET WITH S007 AND S008.
3. SHEET PILES SHALL BE FIBER REINFORCED PLASTIC (FRP). REFER TO SHEET S008 FOR REQUIRED FRP SHEET PILE PROPERTIES AND SECTIONS.
4. EXISTING WALL PLANKS/WALES THAT ARE NO LONGER REQUIRED SHALL BE REMOVED.
5. ADJUST ELEVATIONS AS REQUIRED TO MATCH SITE CONDITIONS. DO NOT EXCEED EXPOSED WALL HEIGHTS SHOWN.
6. PLACE RIPRAP AND BEDDING STONE CAREFULLY ADJACENT TO SHEET PILES TO PREVENT DAMAGE.
7. BACKFILL SHALL BE A COHESIONLESS MATERIAL MEETING SPECIFICATIONS AND SHALL BE PLACED IN 12" MAX LIFTS AND COMPACTED TO 90 MODIFIED PROCTOR OR BETTER.
8. COMPACTION WITHIN 3'-0" OF THE SHEET PILE WALL FACE SHOULD BE ACHIEVED USING A PLATE TAMPER WITH A MINIMUM WEIGHT OF 300 LBS.
9. CONTRACTOR SHALL COORDINATE COMPONENTS FOR A COMPLETE SHEET PILE SYSTEM INCLUDING CAPS, WALES, ANCHORS, CORNERS, AND MISCELLANEOUS CONNECTIONS TO MATCH THE MINIMUM SHEET PILE SIZE INDICATED IN THE PLANS. ALL ITEMS NECESSARY TO PROVIDE A COMPLETE WALL SYSTEM ARE INCIDENTAL TO THE COST OF THE SHEET PILES.
10. WALL CAPS SHALL BE A FRP SHAPE DESIGNED BY THE MANUFACTURER FOR USE ON THE SELECTED PILE SHAPE. INSTALL ACCORDING TO MANUFACTURER'S WRITTEN INSTRUCTIONS.
11. INSTALL SHEETS ALONG STRAIGHT LINES WITH AN ALLOWABLE HORIZONTAL TOLERANCE OF 1" WITHIN 10'.
12. WALES AND TIE-BACKS ARE NOT REQUIRED FOR THESE WALLS FOR STRENGTH OR DEFLECTION, BUT MAY BE REQUIRED TO MEET HORIZONTAL INSTALLATION TOLERANCE. IF USED, WALES SHALL BE A FRP MATERIAL DESIGNED BY THE MANUFACTURER FOR USE ON THE SELECTED PILE SHAPE.
13. BENT PLATE SHALL BE ASTM A36 GALVANIZED.
14. EXPANSION BOLTS SHALL BE 3/4" DIA. STAINLESS STEEL SUCH AS HILTI KWIK BOLT 3 SS 304.
15. CUT EXISTING SHEET PILE WALLS AT THE INTERFACE WITH NEW WALLS AND ATTACH TO THE NEW WALLS USING MATERIALS MATCHING EITHER THE EXISTING OR NEW WALLS. USE FILTER FABRIC ALONG THE INTERFACE, DETAILS OF THE ATTACHMENT TO BE SUBMITTED FOR REVIEW PRIOR TO IMPLEMENTATION. COSTS OF THE CONNECT ARE INCIDENTAL TO THE SHEET PILES.
16. CONTRACTOR SHALL VERIFY ALL DIMENSIONS, ELEVATIONS AND ANGLES SHOWN FOR EXISTING ITEMS THAT AFFECT CONSTRUCTION PRIOR TO STARTING CONSTRUCTION.
17. THE CONTRACTOR SHALL BE RESPONSIBLE FOR IDENTIFYING BURIED AND OVERHEAD UTILITIES PRIOR TO SHEET PILE INSTALLATION AND SHALL COORDINATE WITH UTILITY COMPANIES TO SUPPORT UTILITIES AS REQUIRED.
18. FOR LOCATIONS OF EXISTING UTILITIES, REFER TO CIVIL PLANS.
19. THE UTILITIES SHOWN IN THE WALL PLANS ARE AT APPROXIMATE LOCATIONS.
20. REFER TO SHEET S008 FOR SECTION B-B AND SHEET PILE ELEVATIONS AND DETAILS.
21. REFER TO SHEET S007 FOR SECTIONS A-A AND B-B FOR RIPRAP INFORMATION.
22. SHEET PILE INSTALLATION IS NOT ALLOWED FROM 7:00 P.M. TO 7:00 A.M.

MOTT MACDONALD
MOTT MACDONALD FLORIDA LLC
3520 West Cleveland Street
Suite 700,
Pensacola, Florida 32505
Telephone: (850) 484-6511
Architects AA - C000303 &
Engineers EB - C000303B
Surveyors LB - 0000793D

HDR
Employee-owned
HDR Engineering, Inc.
25 West Cedar Street, Suite 200
Pensacola, FL 32502-5945
(850) 432-6800
www.hdrinc.com
Certificate of Authorization No. 4213

ISSUE	DATE	DESCRIPTION
A	10/20/17	ISSUED FOR PERMIT

PROJECT MANAGER	B. HENDRICKS
DESIGNED BY	YSS
DRAWN BY	KWD
CHECKED BY	BFH
PROJECT NUMBER	13-14.081

Bart F. Hendricks
License No. 51391

ESCAMBIA COUNTY FLORIDA

ESCAMBIA COUNTY ENGINEERING DEPARTMENT

LAKE CHARLENE Area of Warrington Basin Study

SHEET PILE WALL PLAN
LAKE JOANNE DRIVE

SCALE: AS SHOWN

SHEET S006

350271 LakeCharlene S006 - SHEET PILE WALL PLAN 10/19/2017 4:06 PM

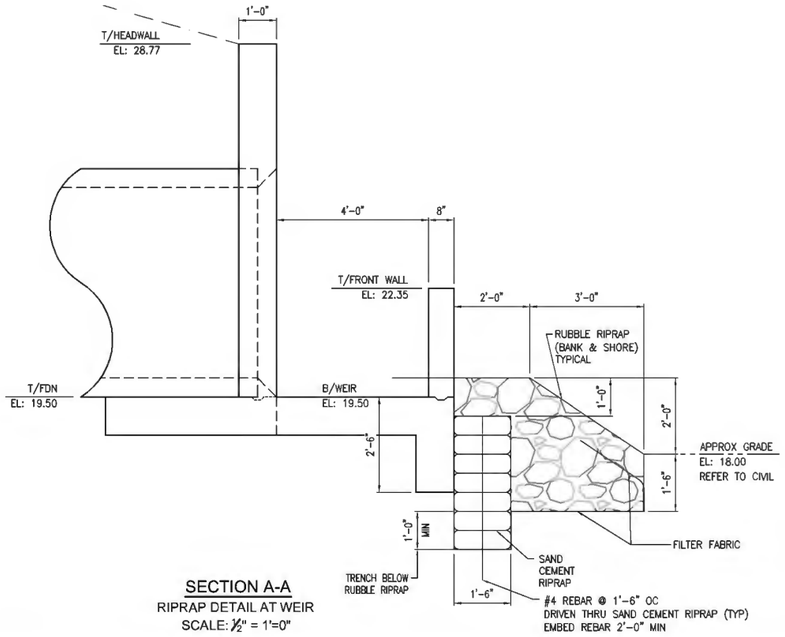

SECTION A-A
RIPRAP DETAIL AT WEIR
SCALE: ½" = 1'=0"

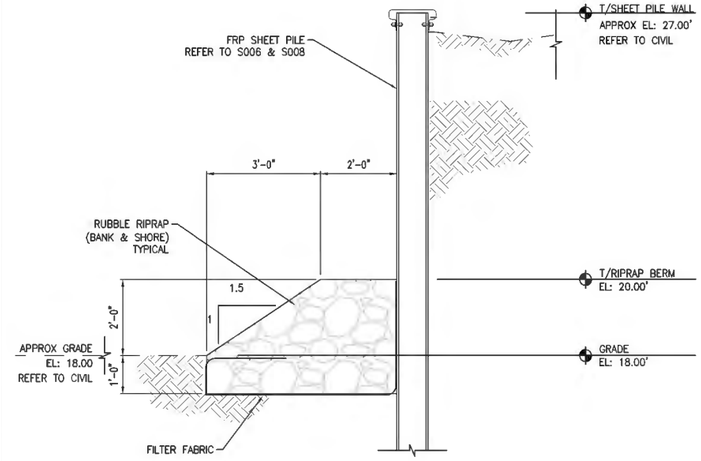

SECTION B-B
RIPRAP DETAIL AT SHEET PILE WALL
SCALE: ½" = 1'=0"

ESTIMATED QUANTITIES				
ITEM	UNIT	QUANTITY		
		LOCATION		
		WEIR	SHEET PILE WALL	SOUTH HEADWALL
RIPRAP (SAND CEMENT)	CY	11	0	REFER TO CIVIL DWG'S
RIPRAP (RUBBLE)	TN	40	45	REFER TO CIVIL DWG'S
BEDDING STONE	TN	0	0	REFER TO CIVIL DWG'S

NOTES:
1. PLACE SAND CEMENT RIPRAP TO A MINIMUM DEPTH OF 1'-0" BELOW BEDDING STONE, AS SHOWN IN RIPRAP DETAILS.
2. PLACE RIPRAP IN ACCORDANCE WITH SECTION 530 OF THE STANDARD SPECIFICATIONS OF ROAD AND BRIDGE CONSTRUCTION.
3. FILTER FABRIC SHALL BE TYPE D-2, SEE DESIGN STANDARD INDEX 199. SPLICE LENGTH SHALL BE 2'-0" MINIMUM.
4. DEWATERING AND COMPACTION SHALL BE PER SECTION 125 OF THE SPECIFICATIONS AND THE REPORT OF GEOTECHNICAL EXPLORATION, BY LARRY M. JACOBS & ASSOCIATES, FILE NO. 16-251 DATED JANUARY 13, 2017.

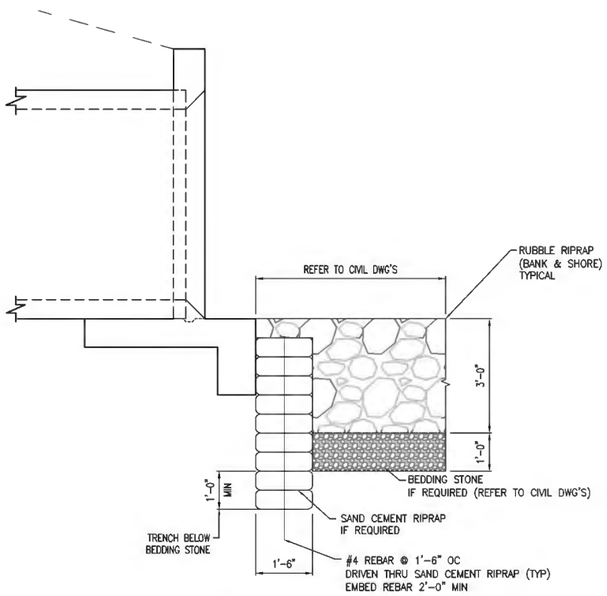

SECTION E-E
RIPRAP DETAIL AT SOUTH HEADWALL
SCALE: ½" = 1'=0"

MOTT MACDONALD
MOTT MACDONALD FLORIDA LLC
2123 West Cardun Street
Suite 700,
Pensacola, Florida 32505
Telephone: (850) 484-6211
Architects AA - C000302
Engineers LB - 00001330
Surveyors LB - 0000793

HDR
Employee-owned
HDR Engineering, Inc.
25 West Cedar Street, Suite 200
Pensacola, FL 32502-5945
(850) 432-6800
www.hdrinc.com
Certificate of Authorization No. 4213

ISSUE	DATE	DESCRIPTION
A	10/20/17	ISSUED FOR PERMIT

PROJECT MANAGER	B. HENDRICKS
DESIGNED BY	YSS
DRAWN BY	KWD
CHECKED BY	BFH
PROJECT NUMBER	13-14.081

Bart F. Hendricks
License No. 51391

ESCAMBIA COUNTY ENGINEERING DEPARTMENT
LAKE CHARLENE Area of Warrington Basin Study

TYPICAL RIPRAP DETAILS

SCALE: AS SHOWN
SHEET: S007

350271 LakeCharlene S007 - TYPICAL RIPRAP DETAILS 10/19/2017 4:07 PM

PERMANENT FRP SHEET PILE NOTES

DESIGN SPECIFICATIONS:
1. FDOT STRUCTURES MANUAL DATED JANUARY 2017, VOLUME 1 AND 2.
2. AMERICAN ASSOCIATION OF STATE HIGHWAY AND TRANSPORTATION OFFICIALS (AASHTO) LRFD BRIDGE DESIGN SPECIFICATIONS (7TH EDITION) AND APPROVED INTERIMS AS SPECIFIED IN THE STRUCTURES DESIGN GUIDELINES.

GOVERNING STANDARDS AND CONSTRUCTION SPECIFICATIONS:
FLORIDA DEPARTMENT OF TRANSPORTATION, 2017 DESIGN STANDARDS AND JULY 2017 STANDARD SPECIFICATIONS FOR ROAD AND BRIDGE CONSTRUCTION, AS AMENDED BY CONTRACT DOCUMENTS.

DESIGN METHOD:
LOAD AND RESISTANCE FACTOR DESIGN METHOD (LRFD).

VERTICAL DATUM:
VERTICAL DATUM USED IS NAVD 88.

ENVIRONMENT:
MODERATELY AGGRESSIVE

DESIGN LOADING:
1. WALL DESIGN LOADS INCLUDE THE LATERAL EARTH PRESSURE AND SURCHARGE LOADS.
2. SEE FRP SHEET PILE WALL DATA TABLE, THIS SHEET.
3. THE DESIGN PARAMETERS INDICATED IN THIS TABLE WERE USED IN THE SHEET PILE WALL ANALYSIS. IF THE CONTRACTOR PLANS OPERATIONS, WHICH EXCEED THE DESIGN PARAMETERS SHOWN, THE CONTRACTOR'S SPECIALTY ENGINEER WILL REDESIGN THE WALL TO RESIST CONSTRUCTION LOADS AT A MAXIMUM DEFLECTION OF 3 INCHES.
4. DESIGN PASSIVE RESISTANCE FACTOR = 0.65

INSTALLATION:
1. THE CONTRACTOR IS RESPONSIBLE FOR MEANS AND METHODS OF CONSTRUCTION.

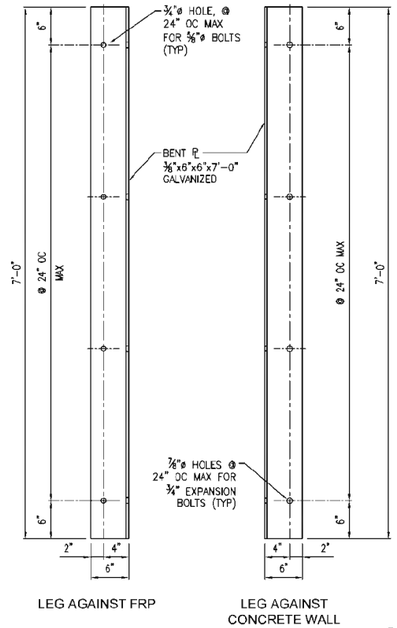

PLATE DETAILS
SCALE: 1" = 1'-0"

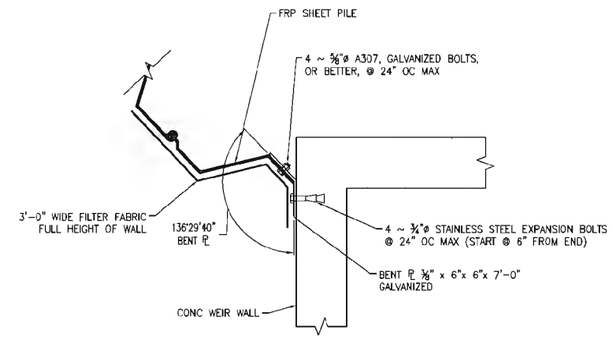

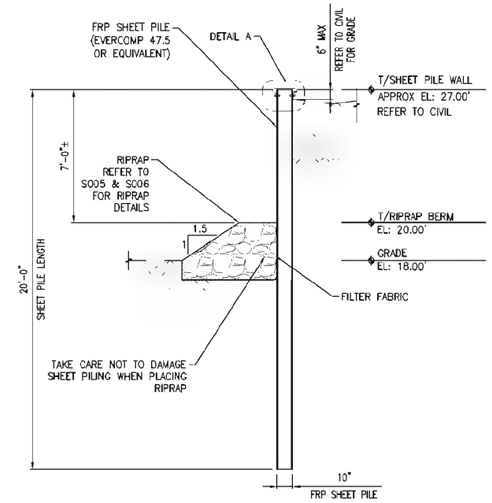

SECTION B-B
FRP SHEET PILE WALL SECTION
SCALE: 1/4" = 1'-0"

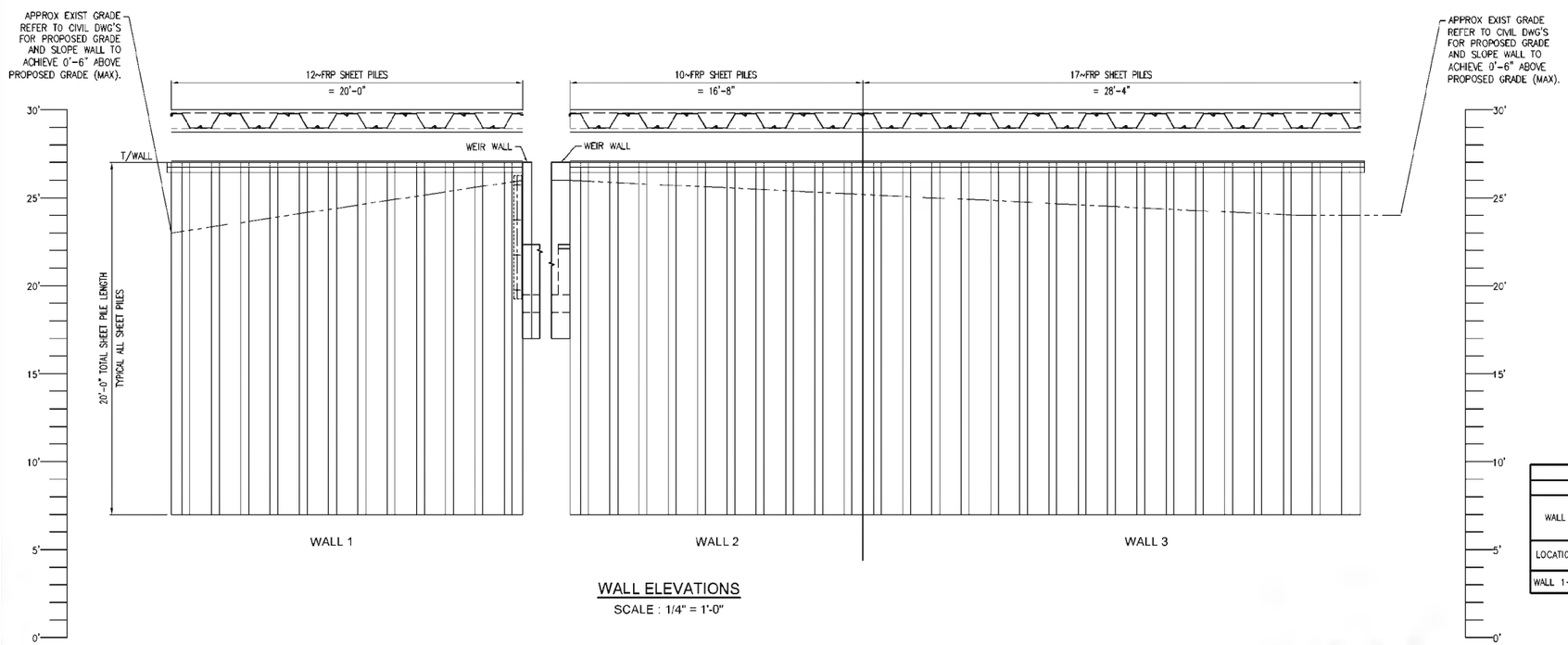

WALL ELEVATIONS
SCALE : 1/4" = 1'-0"

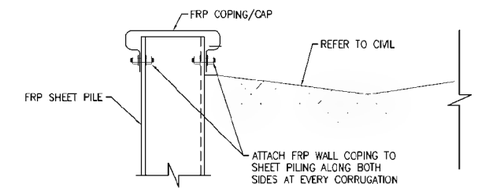

DETAIL A
SCALE: 1" = 1'-0"

FRP SHEET PILE WALL, DATA TABLE

CONSTRUCTION INFORMATION							*** DESIGN PARAMETERS					
WALL DESCRIPTION		MOMENT CAPACITY	MIN.(*) EI/FT X10^6	EXAMPLE SHAPES	MAXIMUM WALL TIP ELEVATION (FT)	WALL TOP ELEVATION (FT) **	SOIL ELEVATION		WATER ELEVATION		(10) DESIGN LIVE LOADS	
LOCATION	WALL LENGTH (FT)	(LB-FT)	(LB-IN^2)				WALL FRONT (FT)	WALL BACK (FT)	WALL FRONT (FT)	WALL BACK (FT)	VERTICAL LIVE LOAD (PSF)	HORIZONTAL LIVE LOAD (PSF)
WALL 1-4	20'-0"	8,200	351	CMI UC -50	7.0	27.00	18.00	26.50	20	20	25	1058

(*) VALUES ARE BASED UPON AN ALLOWABLE 3" DEFLECTION
** MAXIMUM WALL TOP ELEVATION
*** CONTROLLING DESIGN PARAMETERS

MOTT MACDONALD
MOTT MACDONALD FLORIDA LLC
520 West Garden Street, Suite 700
Pensacola, Florida 32502
Telephone: (850) 434-6471
Arthocs AA C00000 5
Engineers EB C000 8555
Surveyors LB C000 8313

HDR
Employee-owned
HDR Engineering, Inc.
25 West Cedar Street, Suite 200
Pensacola, FL 32502-5945
(850) 432-6800
www.hdrinc.com
Certificate of Authorization No. 4213

ISSUE	DATE	DESCRIPTION
A	10/20/17	ISSUED FOR PERMIT

PROJECT MANAGER	B. HENDRICKS
DESIGNED BY	YSS
DRAWN BY	KWD
CHECKED BY	BFH
PROJECT NUMBER	13-14.081

Bart F. Hendricks
License No. 51391

ESCAMBIA COUNTY ENGINEERING DEPARTMENT

LAKE CHARLENE Area of Warrington Basin Study

SHEETPILE DETAILS
LAKE JOANNE DRIVE

SCALE AS SHOWN

SHEET S008

350271 SHEETPILE DETAILS 10/9/2017 4:10 PM S008

REINFORCING BAR LIST
HEADWALL (LAKE JOANNE DRIVE)

SIZE	DESIGNATION	TOTAL NO. REQUIRED	TOTAL LENGTH	A	B	C
3	A1	2	43'-4"	43'-4"		
3	A2	2	54'-0"	54'-0"		
3	A3	2	33'-6 5/8"	33'-6 5/8"		
3	A4	2	32'-8 3/4"	32'-8 3/4"		
3	A5	2	13'-1 1/2"	13'-1 1/2"		
3	A6	2	12'-3 3/8"	12'-3 3/8"		
3	A7	2	11'-11 1/2"	11'-11 1/2"		
3	A8	2	12'-0 3/8"	12'-0 3/8"		
3	A9	2	12'-6 1/8"	12'-6 1/8"		
3	A10	2	13'-8 3/8"	13'-8 3/8"		
3	A11	4	4'-11 7/8"	4'-11 7/8"		
3	A12	4	3'-3 5/8"	3'-3 5/8"		
3	A13	4	3'-3 3/4"	3'-3 3/4"		
3	A14	4	4'-3 1/8"	4'-3 1/8"		
3	A15	2	3'-9 1/4"	3'-9 1/4"		
3	A16	2	6'-1 5/8"	6'-1 5/8"		
3	A17	2	3'-8"	3'-8"		
3	A18	2	7'-0"	7'-0"		
3	A19	2	14'-8 7/8"	14'-8 7/8"		
3	A20	2	13'-10 7/8"	13'-10 7/8"		
3	A21	2	13'-6 5/8"	13'-6 5/8"		
3	A22	2	13'-6 3/4"	13'-6 3/4"		
3	A23	2	13'-11 1/4"	13'-11 1/4"		
3	A24	2	14'-9 5/8"	14'-9 5/8"		
3	A25	2	25'-1 1/4"	25'-1 1/4"		
3	A26	2	26'-3 3/8"	26'-3 3/8"		
3	B1	65	2'-10"		0'-10"	2'-0"
4	A1	53	9'-1 1/4"	9'-1 1/4"		
4	A2	24	54'-0"	54'-0"		
4	A3	4	54'-0"	54'-0"		
4	A4	55	4'-8 1/4"	4'-8 1/4"		
4	A5	2	9'-5 3/8"	9'-5 3/8"		
4	A6	2	9'-8 7/8"	9'-8 7/8"		
4	A7	2	10'-0 3/4"	10'-0 3/4"		
4	A8	2	10'-4 5/8"	10'-4 5/8"		
4	A9	2	10'-8 1/2"	10'-8 1/2"		
4	A10	2	11'-0 3/8"	11'-0 3/8"		
4	A11	24	4'-4"	4'-4"		
4	A12	2	2'-1 3/8"	2'-1 3/8"		
4	A13	2	4'-8 1/2"	4'-8 1/2"		
5	A1	53	9'-1 1/4"	9'-1 1/4"		
5	A2	73	8'-10"	8'-10"		
5	A3	8	5'-0"	5'-0"		
5	A4	8	7'-0"	7'-0"		
5	A5	8	10'-0"	10'-0"		
5	B1	37	7'-2"		3'-0"	4'-2"
5	B2	43	8'-4"		3'-0"	5'-4"

REINFORCING BAR LIST
HEADWALL (US 98 AND SOUTH 61st AVENUE)

SIZE	DESIGNATION	TOTAL NO. REQUIRED	TOTAL LENGTH	A	B	C
3	A1	4	19'-11"	19'-11"		
3	A2	2	3'-2"	3'-2"		
3	A3	16	2'-0"	2'-0"		
3	A4	2	2'-10 3/8"	2'-10 3/8"		
3	A5	2	14'-5 5/8"	14'-5 5/8"		
3	A6	2	13'-1 3/4"	13'-1 3/4"		
3	A7	2	12'-7 1/4"	12'-7 1/4"		
3	A8	2	12'-5 1/4"	12'-5 1/4"		
3	A9	2	12'-6 7/8"	12'-6 7/8"		
3	A10	2	13'-0 5/8"	13'-0 5/8"		
3	A11	2	14'-2 3/8"	14'-2 3/8"		
3	B1	21	2'-5"	2'-5"	10"	1'-7"
4	A1	32	6'-11"	6'-11"		
4	A2	27	4'-2"	4'-2"		
4	A3	12	19'-11"	19'-11"		
4	B1	15	4'-10"		2'-0"	2'-10"
4	B2	15	3'-10"		1'-10"	2'-0"
5	A1	4	5'-3"	5'-3"		
5	A2	4	3'-9"	3'-9"		

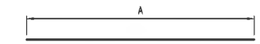

"A" BARS

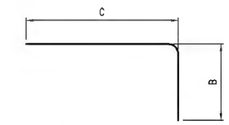

"B" BARS

NOTE:
ALL BAR DIMENSIONS ARE OUT TO OUT

BENDING DIAGRAM
NOT TO SCALE

MOTT MACDONALD FLORIDA LLC
222 West Garden Street
Suite 700,
Pensacola, Florida 32502
Telephone: (850) 484-6011
Architects AA - C000303 ©
Engineers LB - 0000122B
Surveyors LB - 0000793Q

HDR Employee-owned
HDR Engineering, Inc.
25 West Cedar Street, Suite 200
Pensacola, FL 32502-5945
(850) 432-6800
www.hdrinc.com
Certificate of Authorization No. 4213

ISSUE	DATE	DESCRIPTION
A	10/20/17	ISSUED FOR PERMIT

PROJECT MANAGER	B. HENDRICKS
DESIGNED BY	YSS
DRAWN BY	KWD
CHECKED BY	BFH
PROJECT NUMBER	13-14.081

Bart F. Hendricks
License No. 51391

ESCAMBIA COUNTY ENGINEERING DEPARTMENT
LAKE CHARLENE Area of Warrington Basin Study

REINFORCING BAR LIST

SCALE: AS SHOWN

SHEET S009

350271 LakeCharlene S009 - REINFORCING BAR LIST 10/19/2017 4:17 PM