FERNO®
When It's Critical®

Users' Manual

Model 678 Pedi-Mate®

October 2011 GLO
Pub. No. 234-2045-03

Read this Manual and Retain for Future Reference

Ferno Technical Support

Customer service and product support are important aspects of each Ferno product. Please have the product serial number available when calling, and include it in all written communications. For technical support questions:

Telephone (Toll-free)	1.800.733.3766 ext. 1010
Telephone	1.937.382.1451 ext. 1010
Email	quality.products@ferno.com

Ferno Customer Relations

For ordering assistance or general information:

CANADA AND THE U.S.A.

Telephone (Toll-free)	1.877.733.0911
Telephone	1.937.382.1451
Fax (Toll-free)	1.888.388.1349
Fax	1.937.382.1191
Internet	www.ferno.com

ALL OTHER LOCATIONS

For assistance or information, please contact your Ferno distributor. If you do not have a Ferno distributor, please contact Ferno Customer Relations:

Ferno-Washington, Inc.
70 Weil Way
Wilmington, Ohio 45177-9371, U.S.A.

Telephone	+1.937.382.1451
Fax	+1.937.382.6569
Internet	www.ferno.com

EUROPEAN REPRESENTATIVE

Ferno (UK) Limited
Stubs Beck Lane, Cleckheaton
West Yorkshire BD19 4TZ, United Kingdom

Telephone	+44 (0) 1274 851999
Fax	+44 (0) 1274 851111
Internet	www.ferno.co.uk

Disclaimer

This manual contains general instructions for the use, operation and care of this product. The instructions are not all-inclusive. Safe and proper use of this product is solely at the discretion of the user. Safety information is included as a service to the user. All other safety measures taken by the user should be within and under consideration of applicable regulations. It is recommended that training on the proper use of this product be provided before using this product in an actual situation.

Retain this manual for future reference. Include it with the product in the event of transfer to new users. Additional free copies are available upon request from Customer Relations.

Proprietary Notice

The information disclosed in this manual is the property of Ferno-Washington, Inc., Wilmington, Ohio, USA. Ferno-Washington, Inc. reserves all patent rights, proprietary design rights, manufacturing rights, reproduction use rights, and sales use rights thereto, and to any article disclosed therein except to the extent those rights are expressly granted to others or where not applicable to vendor proprietary parts.

Limited Warranty Statement

The products sold by Ferno are covered by a limited warranty, which is printed on all Ferno invoices. The complete terms and conditions of the limited warranty, and the limitations of liability and disclaimers, are also available upon request by calling Ferno at 1.800.733.3766 or 1.937.382.1451.

USERS' MANUAL

To request additional free users' manuals, contact Ferno Customer Relations, your Ferno distributor, or visit www.ferno.com.

CE

© Copyright Ferno-Washington, Inc. All Rights Reserved.

TABLE OF CONTENTS

Section	Page
Ferno Technical Support	2
Ferno Customer Relations	2
1 - Safety Information	**4**
1.1 Warning	4
1.2 Important	4
1.3 Bloodborne Disease Notice	4
1.4 Safety and Instruction Labels	4
1.5 Symbol Glossary	4
2 - Operator Skills and Training	**5**
2.1 Skills	5
2.2 Training	5
3 - About the Pedi-Mate®	**6**
3.1 Description	6
3.2 General Specifications	7
3.3 Components	7
4 - Using the Pedi-Mate®	**8**
4.1 Before Placing the Pedi-Mate® in Service	8
4.2 General Guidelines for Use	8
4.3 Positioning the Pedi-Mate®	9
4.4 Securing the Pedi-Mate®	9
4.5 Securing the Patient	10
4.6 Releasing the Patient from the Pedi-Mate® Harness	11
4.7 Storing the Pedi-Mate®	11
5 - Maintenance	**12**
5.1 Maintenance Schedule	12
5.2 Disinfecting the Pedi-Mate®	12
5.3 Cleaning the Pedi-Mate®	12
5.4 Inspecting the Pedi-Mate®	12
Training Record	**13**
Maintenance Record	**14**

1 - SAFETY INFORMATION

1.1 Warning

Warning notices indicate a potentially hazardous situation which, if not avoided, could result in injury or death.

⚠ WARNING

Untrained operators can cause injury or be injured. Permit only trained personnel to operate the Pedi-Mate®.

Improper use of the Pedi-Mate® can cause injury. Use the Pedi-Mate® only for the purpose described in this manual.

Improper application can cause injury. Apply the Pedi-Mate® only as described in this manual.

An unattended patient can be injured. Stay with the patient at all times.

Secure and snug all straps. Unsecured or loose straps may allow movement and result in injury or death of the patient.

Improper maintenance can cause injury. Maintain the Pedi-Mate® only as described in this manual.

1.2 Important

Important notices emphasize important usage or maintenance information.

Important

1.3 Bloodborne Disease Notice

To reduce the risk of exposure to bloodborne diseases such as HIV-1 and hepatitis when using the Pedi-Mate®, follow the disinfecting and cleaning instructions in this manual.

1.4 Safety and Instruction Labels

Safety and instruction labels place important information from the Users' Manual on the Pedi-Mate®.

Read and follow label instructions. Illustrations showing how to attach the Pedi-Mate® to the cot are printed directly on the Pedi-Mate® base. For complete instructions, see Using the Pedi-Mate®, page 8-11.

1.5 Symbol Glossary

The symbols defined below are used on the Pedi-Mate® and/or in this users' manual. Ferno uses symbols recognized by the International Standards Organization (ISO), American National Standards Institute (ANSI) and the emergency medical services industry.

General Warning of Potential Injury

Read the Users' Manual

Load Limit

Operation Requires One Trained Operator

© Ferno-Washington, Inc

2 - OPERATOR SKILLS AND TRAINING

2.1 Skills

Operators using the Pedi-Mate® need:

- a working knowledge of emergency patient-handling procedures.
- the ability to assist the patient.

2.2 Training

Operator need to:

- read and understand this manual.
- be trained on the use of the Pedi-Mate®.
- practice with the Pedi-Mate® before using it with a patient.
- record their training information. A sample training record sheet is provided on page 13.

⚠ WARNING

Untrained operators can cause injury or be injured. Permit only trained personnel to operate the Pedi-Mate®.

3 - ABOUT THE PEDI-MATE®

3.1 Description

The Pedi-Mate® is designed to secure infants and toddlers from 10 to 40 lbs (4.5 to 18.1 kg) on a Ferno cot.

USE

The Pedi-Mate® is designed for use only in an emergency setting and only by suitably trained personnel. Where child restraint is needed outside of this setting, the transport vehicle should be fitted with restraints in accordance with applicable local standards and regulations, including but not limited to, the United States Federal Motor Vehicle Safety Standards and Regulations.

The Pedi-Mate® is for professional use by one or more trained operators.

The Pedi-Mate® is not designed as an immobilization device and should not be used to immobilize the patient, or as part of an immobilization system.

FEATURES

The Pedi-Mate® blanket is soft, lightweight vinyl. One-piece webbing straps with quick-release buckles attach it to Ferno cot frames at three points.

The five-point patient harness consists of two continuous-loop shoulder/torso straps and a crotch strap. All secure in a central, fast-release buckle and all are fully adjustable.

COMPATIBLE COTS

The Pedi-Mate® is designed for use with the following Ferno cot models:

26 Series	Mondial® RS2 Stretcher
28-Z PROFlexx®	Mondial® RS3 Stretcher
29-M	Mondial® RS4 Stretcher
30-SC	EFX 1 Stretcher Chair
35-A Series	EFX 2 Stretcher
35-A+Series	EFX 3 Stretcher
35-P PROFlexx® Series	EFX MonoBloc
35-X PROFlexx® Series	4140 Series Stretchers
93-ES Series	Falcon Range
93-EX Series	Hawk Range
93-P PROFlexx® Series	Pegasus Range
93-H PROFlexx® Series	CCT Range
POWERFlexx®	Megasus

Note: *The Pedi-Mate® is not compatible with Models 28 or 2033 chair cots.*

⚠ WARNING

Improper use of the Pedi-Mate® can cause injury. Use the Pedi-Mate® only for the purpose described in this manual.

LOAD LIMIT

If the load limit has been exceeded (see *Inspecting the Pedi-Mate®, page 12*).

© Ferno-Washington, Inc

3.2 General Specifications

Open, Flat	
Width	19 in (483 mm)
Length	31 1/4 in (794 mm)
Rolled	
Diameter	4 1/2 in (114 mm)
Length	19 in (483 mm)
Weight	2.4 lb (1.09 kg)
Load Limit	
Minimum	10 lb (4.5 kg)
Maximum	40 lb (18.1 kg)
Webbing Rating	3500 lb (1.6 mt)

Most general specifications are rounded to the nearest whole number. Metric conversions are calculated before rounding the Imperial measurements.

For more information about the Pedi-Mate® contact Ferno Customer Relations (page 2) or your Ferno distributor.

Ferno reserves the right to change specifications without notice.

3.3 Components

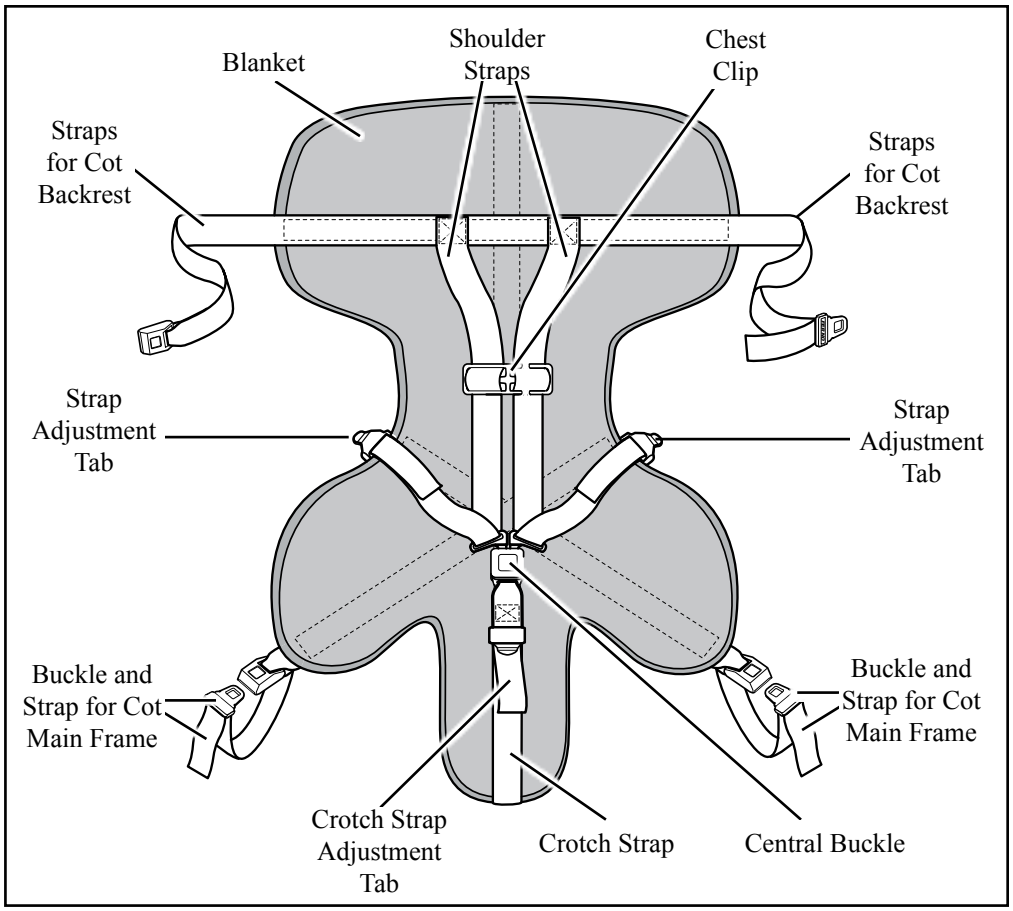

Not Shown

Hook-and-loop storage straps on reverse surface of Pedi-Mate® are not visible in this view.

4 - USING THE PEDI-MATE®

4.1 Before Placing the Pedi-Mate® in Service

- Personnel who will work with the Pedi-Mate® need to read this manual and practice using the Pedi-Mate®.
- Confirm that the Pedi-Mate® operates properly. Follow instructions in *Inspecting the Pedi-Mate, page 12*.

4.2 General Guidelines for Use

- Medical advice is beyond the parameters of this manual.
- It is the Pedi-Mate® users' responsibility to ensure safe practices for the patient and themselves.
- It is the responsibility of the qualified Emergency Medical Service personnel to assess the patient's condition and determine the proper equipment and procedures to use.
- Follow standard emergency patient-handling procedures when using the Pedi-Mate®.
- Stay with the patient at all times.
- Always use the patient harness.
- Use the Pedi-Mate® only when all elements are in good working order.
- Use the Pedi-Mate® only with the approved cot models listed on page 6.
- Never use the Pedi-Mate® in a captain's chair or front seat of an ambulance.
- Never use the Pedi-Mate® as an immobilization device or as part of an immobilization system.
- If the Pedi-Mate® is in use at the time of a vehicular accident, remove the Pedi-Mate® from service and replace it.

⚠ WARNING

Improper application can cause injury. Apply the Pedi-Mate® only as described in this manual.

⚠ WARNING

An unattended patient can be injured. Stay with the patient at all times.

⚠ WARNING

Secure and snug all straps. Unsecured or loose straps may allow movement and result in injury or death of the patient.

© Ferno-Washington, Inc

4.3 Positioning the Pedi-Mate®

1. Remove any restraints attached to the cot.
2. Raise the cot backrest and lock in place at an angle between 15 and 45 degrees. This will keep the patient's shoulders higher than the pelvis and maintain the proper center of gravity.
3. Unroll the Pedi-Mate® and spread it flat on the cot mattress with all straps extended.
4. Center the blanket left to right on the mattress.
5. Position the blanket with the black backrest strap at the point where you expect the patient's shoulders to rest (Figure 1).

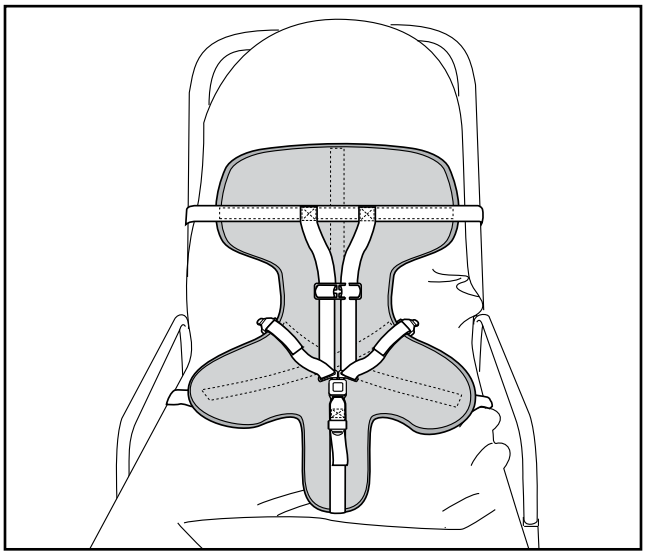

Figure 1 - Pedi-Mate® Positioned on a Cot

6. Run the ends of the backrest strap around the cot backrest until they meet in the back, then fasten the buckle (Figure 2). Leave some slack in the strap for final adjustment.

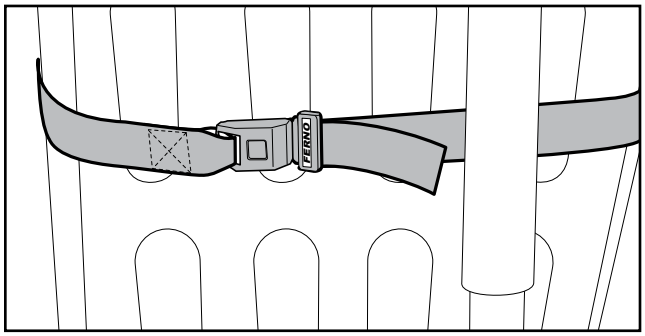

Figure 2 - Attach the Pedi-Mate® Backrest Strap

4.4 Securing the Pedi-Mate®

1. Place the patient on the Pedi-Mate®. If the black backrest strap is not at the patient's shoulder level, adjust the blanket position.
2. With the blanket properly positioned, tighten the backrest strap by pulling very firmly on the free end of the strap until the mattress is compressed.
3. Fasten a main frame strap by threading the free end downward between the cot main frame and the mattress next to the head-end sidearm casting.
4. Wrap the strap up around the cot main frame and fasten the buckle (Figure 3). Leave a little slack in the strap for final adjustment.
5. Repeat with the other main-frame strap.
6. Tighten each main frame strap by holding onto the buckle with one hand and pulling firmly on the free end of the strap.

Note: *To loosen a main-frame strap, unfasten it, then grasp the buckle tang, and pull outward. Refasten the buckle.*

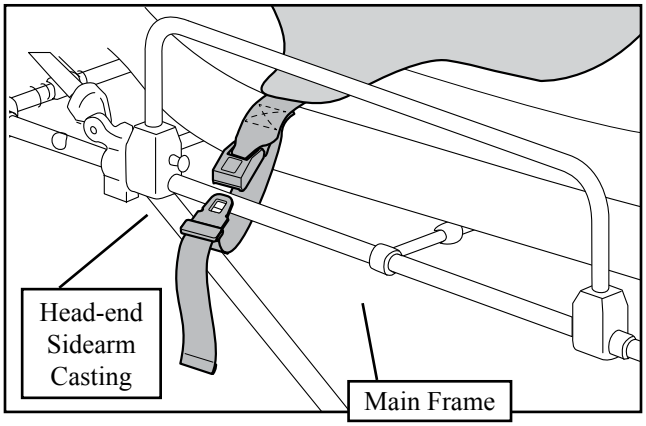

Figure 3 - Attach a Strap to the Cot Main Frame

4.5 Securing the Patient

⚠ WARNING

Secure and snug all straps. Unsecured or loose straps may allow movement and result in injury or death of the patient.

1. Pull the crotch strap buckle up between the patient's legs and lay the strap on the patient's abdomen.
2. Lift a shoulder strap over one shoulder of the patient. Place patient's arm through the strap, then lock the buckle half into the central buckle (Figure 4).
3. Repeat with the other shoulder strap.

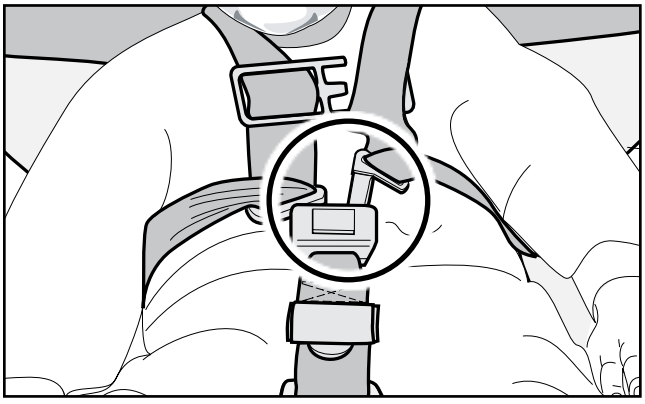

Figure 4 - Fastening a Shoulder Strap

4. Thread the shoulder strap on the patient's left side through the chest clip (Figure 5) and slide the chest clip to armpit level.

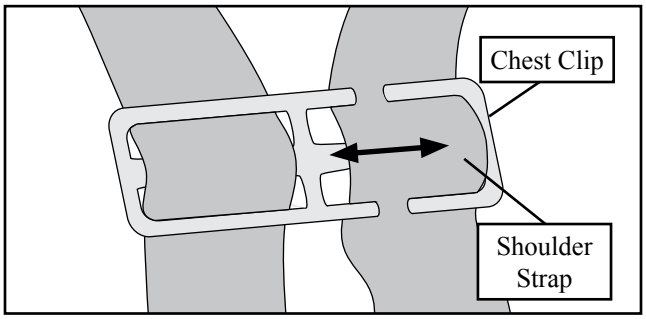

Figure 5 - Fastening a Shoulder Strap

5. To snug the shoulder/torso straps, refer to Figure 6 and use the following procedure:
   - Snug the shoulder strap (A) against the shoulder and chest by pulling section B of the strap with one hand while steadying the central buckle with the other hand.
   - Repeat with the other shoulder strap.
   - Snug the torso strap (B) by pulling on section C with one hand while steadying the central buckle with the other hand.
   - Repeat with the other torso strap.
6. Snug the crotch strap by pulling on the free end.

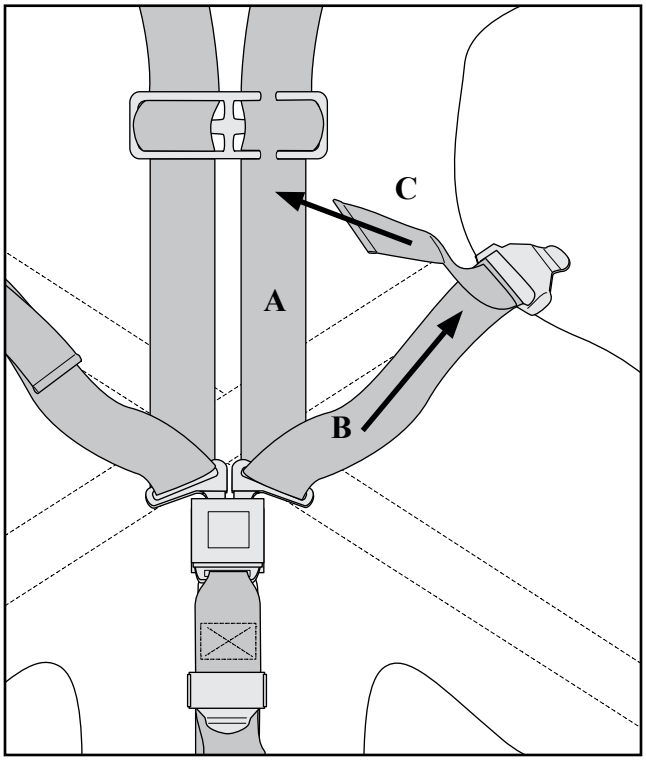

Figure 6 - Fastening a Shoulder Strap

© Ferno-Washington, Inc

LOOSENING THE HARNESS STRAPS

To loosen the straps, refer to Figures 7 and 8 and use the following procedures:

1. Grasp the adjustment tab (Figure 7) with one hand and pull the torso strap (B) back through the tab with your other hand.
2. Steady the central buckle with one hand and loosen the shoulder strap (A) by pulling it upward with the other hand.
3. Repeat with the other shoulder/torso strap.
4. Loosen the crotch strap by grasping the adjustment tab with one hand and pulling downward on the portion of the strap that rests against the body (Figure 8).

4.6 Releasing the Patient from the Pedi-Mate® Harness

1. Loosen the crotch strap.
2. Slide the chest clip down toward the central buckle and unthread the shoulder strap on the patient's left side from the clip.
3. Press the red release button in the central buckle and pull the buckle slightly downward to release the shoulder straps from the buckle.
4. Loosen the shoulder straps and slide them away from the patient's body.
5. Lift the patient from the Pedi-Mate® according to local protocols.

4.7 Storing the Pedi-Mate®

1. Detach the Pedi-Mate® from the cot and spread it flat on the cot mattress.
2. Attach the shoulder straps to the central buckle and adjust all straps to lay smoothly against the blanket.
3. Fold the backrest straps across the blanket.
4. Fold the crotch panel up toward the center of the blanket.
5. Fold the cot main-frame straps and the lower blanket panels across the center of the Pedi-Mate®.
6. Beginning at the crotch panel, roll the Pedi-Mate® upward. Secure the roll with the hook-and-loop straps.

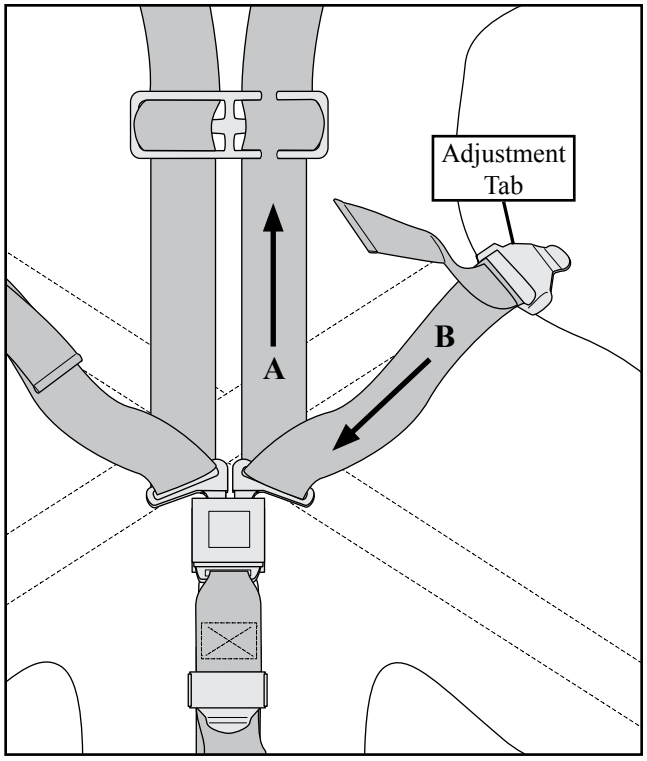

Figure 7 - Loosening the Strap

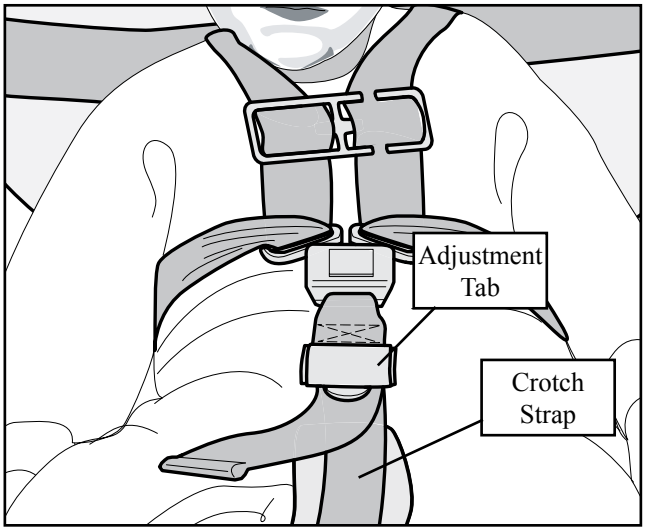

Figure 8 - Loosening the Crotch Strap

5 - MAINTENANCE

5.1 Maintenance Schedule

The Pedi-Mate® requires regular maintenance. Set up and follow a maintenance schedule (see maintenance record sheet on page 14). The table at right represents minimum intervals for maintenance.

When using maintenance products, follow the manufacturers' directions and read the manufacturers' material safety data sheets.

⚠ WARNING

Improper maintenance can cause injury. Maintain the Pedi-Mate® only as described in this manual.

5.2 Disinfecting the Pedi-Mate®

Wipe or spray disinfectant on all Pedi-Mate® and surfaces and straps. Follow the disinfectant manufacturer's directions for application and contact time.

5.3 Cleaning the Pedi-Mate®

Hand wash the Pedi-Mate® blanket and straps with warm, soapy water and a clean cloth or soft brush. Rinse with clear water. Dry the blanket with a towel and allow the straps to air dry.

Do not immerse the buckles in water.

Minimum Maintenance Intervals	Each Use	As Needed	Each Month
Disinfecting (this page)	•		
Cleaning (this page)		•	
Inspecting (this page)		•	•

5.4 Inspecting the Pedi-Mate®

Have your services equipment maintenance personnel inspect the Pedi-Mate® regularly. Follow the inspection checklist.

If the inspection shows damage or excessive wear, remove the Pedi-Mate® from service. Ferno recommends that in addition to scheduled maintenance, operators perform a visual inspection each time the Pedi-Mate® is used. If damage is noted, remove the Pedi-Mate® from service immediately and replace it.

INSPECTION CHECKLIST

- Are all components present?
- Is the Pedi-Mate® free of excessive wear?
- Is all stitching secure?
- Do the central buckle and adjustment tabs operate properly and smoothly?
- Are there cuts or tears in the blanket or straps?

Important

Disinfectants and cleaners containing bleach, phenolics, or iodines can damage the Pedi-Mate®. Do not use products containing these chemicals.

Important

If the Pedi-Mate® is in use at the time of a vehicular accident, remove the Pedi-Mate® from service and replace it.

U.S.A. NOTICE

The cot is for use with ambulances that meet the requirements of the "Star of Life" certification via Federal Ambulance Specification KKK-A-1822. For information, contact:

Federal Supply Services, Specifications Section
Suite 8100
470 E. L'Enfant Plaza, SW
Washington, DC 204

© Ferno-Washington, Inc

TRAINING RECORD		
Date	**Name**	**Training Method**

MAINTENANCE RECORD		
Date	**Maintenance Performed**	**By**

© Ferno-Washington, Inc 234-2045-03 October 2011

NOTES