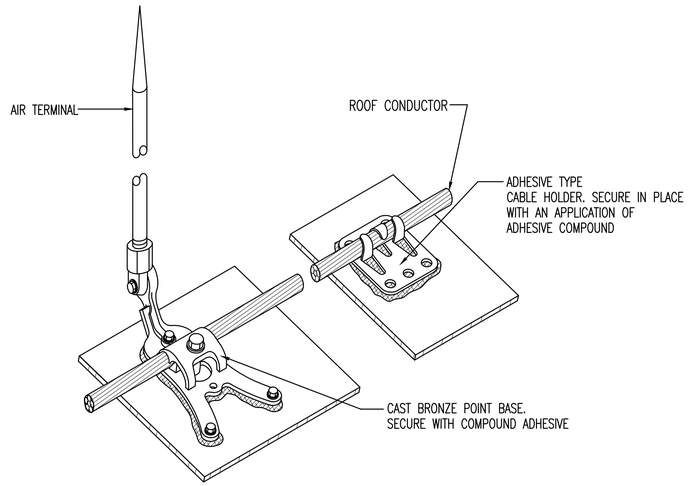

A ROOF AIR TERMINAL DETAIL
NOT TO SCALE

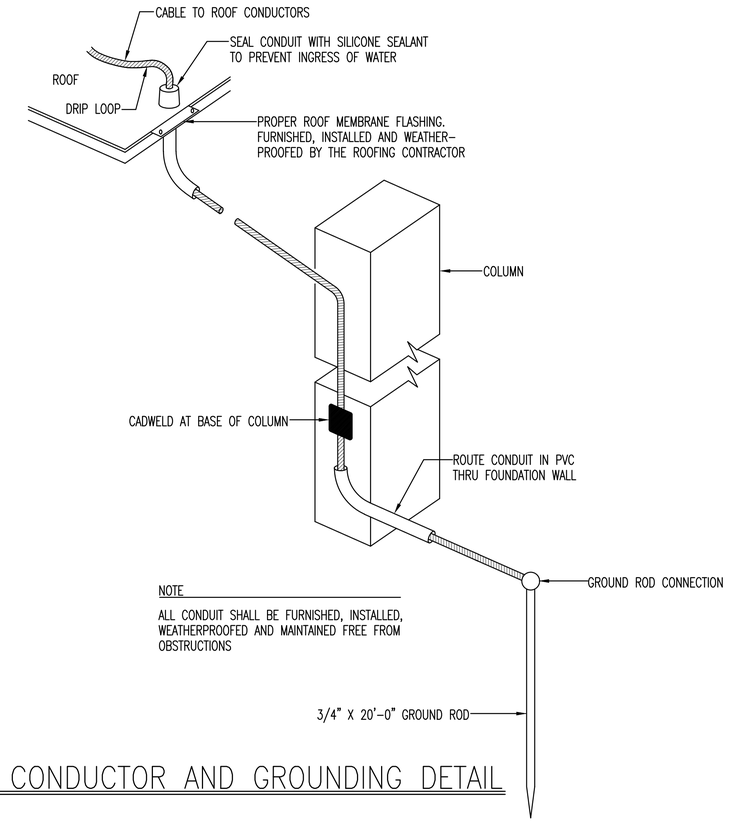

NOTE

ALL CONDUIT SHALL BE FURNISHED, INSTALLED, WEATHERPROOFED AND MAINTAINED FREE FROM OBSTRUCTIONS

DOWN CONDUCTOR AND GROUNDING DETAIL
NOT TO SCALE

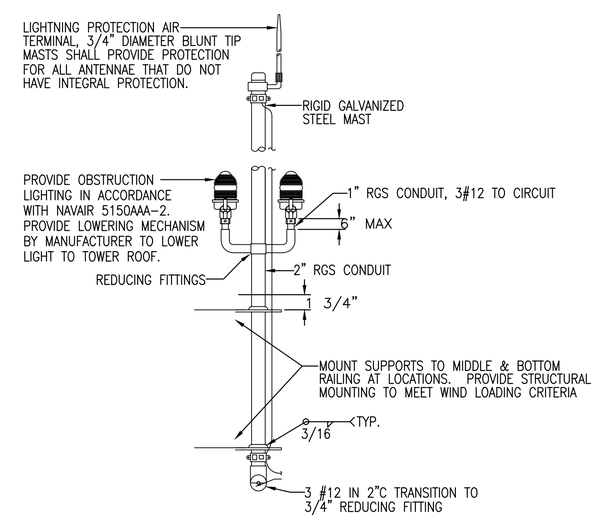

LIGHTNING PROTECTION MAST
NOT TO SCALE

ADAMS CONSULTING ENGINEERING, INC.
3 West Garden Street • Suite 608 • Pensacola, Florida 32502
Office: 850-444-0095 • Fax: 850-444-0096 • E-mail: scott@adamscei.com
SCOTT A. ADAMS, P.E. FL LICENSE No. 57949 • CA No. 26311

100% RTA SUBMITTAL

BASKERVILLE-DONOVAN, INC.
Innovative Infrastructure Solutions
449 W. MAIN ST., PENSACOLA, FL 32502 (850)438-9661
ENGINEERING BUSINESS: EB-0000340
Pensacola - Panama City Beach - Tallahassee - Mobile - Brevard County - Tampa

This drawing is the property of BASKERVILLE-DONOVAN, INC. and is not to be reproduced in whole or in part. It is not to be used on any other project and is to be returned upon request.

SCOTT A. ADAMS, P.E.

OLF-X
PHASE II – AIRFIELD

NO.	DATE	APPR.	REVISION/ACTION TAKEN
001	02/13/18	SAA	ADDENDUM TO BID DOCUMENTS
003	02/23/18	SAA	ADDENDUM TO BID DOCUMENTS

NOT RELEASED FOR CONSTRUCTION BY DATE / /

PROJECT NO: 25898.03
DESIGNED BY: SAA
DRAWN BY: DAH
CHK'D BY: SAA
PROJ. MGR: –
DATE: FEBRUARY 2018

LIGHTNING PROTECTION SYSTEM DETAILS

E-302

S:\2017\17118 OLF\17118-E302.dwg, Feb 23, 2018 - 12:55:25PM, Deborah